BODLEIAN LIBRARY OXFORD
DEPOSITED
THESIS

STUDIES IN THE BOOK OF JUBILEES:

THE THEMES OF CALENDAR, GENEALOGY AND CHRONOLOGY

John T. Rook
Regent's Park College

1983

Thesis submitted for the Degree
of Doctor of Philosophy
in the
University of Oxford

STUDIES IN THE BOOK OF JUBILEES: THE THEMES OF CALENDAR, GENEALOGY AND CHRONOLOGY

John T. Rook
Regent's Park College

D.Phil.
Michaelmas, 1983.

This thesis is divided into three distinct yet related chapters. The first chapter deals with the question of the actual calendar which is used in Jubilees. The work criticizes scholarly opinions concerning the calendar which have gone relatively unchallenged since the Qumran discovery. The chapter concludes that while the calendar question is difficult and many calendars can be detected as functioning in the work, it is the 28-day month which is dominant and not months of 30, 30 and 31 days.

In the second chapter which deals with the genealogy of the patriarchs, the attention of the reader is directed to the names of the wives of the patriarchs. The question which the thesis raises at this point is related to the function of these women in the narrative in relation to the etymology of their names. The conclusion reached is that the narrative and the etymology of the names are clearly related. For example, when the etymological meaning of a woman is favourable, the narrative at that point is positive and vice versa.

Chapter Three deals with chronology which is in close proximity to both calendar and genealogy. The question the thesis asks is how the chronology of Jubilees relates to the chronologies of MT, LXX and SP and also raises the question as to which chronology that of Jubilees is dependant upon for its structure. It is determined that Jubilees and SP are most closely related. The structure itself of the chronology of Jubilees is examined and it is concluded that the design is more concerned with past history than future history.

The implications of the thesis on the questions of date and authorship are considered. The conclusion is reached that the author is a member of an unnamed conservative-pietist sect who wrote at a time later than Antiochus IV.

STUDIES IN THE BOOK OF JUBILEES:

THE THEMES OF CALENDAR, GENEALOGY AND CHRONOLOGY

John T. Rook
Regent's Park College

D.Phil.
Michaelmas, 1983.

The discovery of several fragments of the Book of Jubilees at Qumran led to a revival of interest in this work from the second century B.C. which had been known to the scholarly world in Ethiopic and an incomplete Latin translation. Works which were related to Qumran in any way became the object of scholarly pursuit as this material would shed new light on Jewish sectarian religion in the pre-Christian era.

In the early 1950's scholarly interest centred in the reasons why this group of people left the rest of Judaism to spend a meagre existence in a secluded community by the Dead Sea. The suggestion was made that the luni-solar calendar which was used in the Temple in Jerusalem was opposed by this group of people now called Qumranites. Scholars suspected that the Qumranites' reaction to the calendar was a factor in their decision to segregate. It was thought that the calendar which the Qumranites accepted was the 364-day calendar as presented in the Book of Jubilees. Jubilees provided the missing element in the calendrical question of Qumran.

The present thesis challenges the position that a 364-day calendar is clearly in daily use at Qumran. The evidence suggests that it was not. The 364-day calendar is in evidence in the War Scroll but this is a calendar for the *future* when the Qumranites have gained control of the Temple. It is also shown that the fragmentary nature of the

Temple Scroll raises serious questions about the calendar it advocates. Scholars have been too hasty in their decision to see the Temple Scroll calendar and the Jubilees calendar as identical.

The thesis concludes that the calendars of Qumran and Jubilees are not exactly identical. The lack of references to a particular calendar which is in daily use at Qumran tends to suggest that for the Dead Sea Community it was not an important issue. For the author of Jubilees it *was* an important issue.

Before the discussion of the Qumran material considerable time is spent in an attempt to understand the calendar of Jubilees. After discussing the recent history of scholarship on the calendar, the internal elements of the calendar are examined. The works of A. Epstein, A. Jaubert, J. Morgenstern and others are considered. A discussion of the celebration of the waving of the Omer, which is missing in Jubilees, raises some serious questions about the conclusions these scholars reached.

Since in recent years the beginning of the week in Jubilees has been viewed as Wednesday, and not Sunday as was previously thought, this receives consideration. Once again the evidence for a beginning of the week on Wednesday does not stand up to careful scrutiny. The present thesis supports the view that the week in Jubilees began on the Sunday.

Of considerable concern to scholars has been the term ʷⲥϧ: (šarq). This day, which is described most clearly in Jub 6:23, is understood by the majority of scholars to be a translation of חדש or to have the sense "new moon". The present thesis examines the evidence and concludes that חדש does not meet the semantic range required by šarq. The suggestion is made that מזרח is closer in semantic range.

Recently the position has been advocated that the length of a month in Jubilees is 30 or 31 days. The present thesis examines this question and concludes that there are various traditions about the length of the month preserved in Jubilees, but that the main system uses months with 28 days each.

Scholars have unreservedly claimed that the calendar in Jubilees is solar. An examination of the texts which suggest that the day began in the morning, which is possible evidence for a solar calendar, encounters some manuscript difficulties. However, the majority of manuscripts suggest that the day begins in the evening. For this reason the present thesis speaks of the 364-day calendar as sabbatical rather than solar. The sabbatical 364-day year is completely dependent upon the number seven. This affects every calculation and as there is no intercalation allowed for, the designation of this calendar as solar is inaccurate.

Because the festivals recorded by the author of Jubilees are of calendrical significance, they are discussed for their calendrical value. With these festivals the connection between the calendar, chronology and genealogy is considered. Persons who are of special importance to the genealogy have their birth-day on the Feast of Weeks. These important patriarchs, who are born on the proper day, also observe the feasts. When the patriarchs are in violation of divine laws the feasts are ignored (Jub 6:18).

The calendar of 1 Enoch 72-82 is considered and is found to be internally different from that of Jubilees. This is important for the Qumran discussion which follows and to which we have already alluded.

The concluding section summarizes the conclusions of the

chapter and proposes a 364-day, 28-day month, non-intercalated calendar as the main calendar in Jubilees.

The second chapter on the genealogical material in Jubilees is an area which has been relatively untouched by scholars. An interesting and fairly uncommon phenomenon is found here: each patriarch has a wife who is named. The chapter is an attempt to prove the extreme importance and value the wife-naming tradition has in the book. This is in reaction to the position of Gene L. Davenport who claims that the names have no relevance for the concerns of the author of Jubilees. The proposition which the present thesis attempts to prove is that "the names of the wives and the meaning of those names is directly related to their function within the narrative."

The discussion begins by examining the possible etymological significance of the reconstructed Hebrew names. The name of each wife of the early patriarchs is considered in turn. By looking for the possible meaning of the Hebrew behind the name, it is observed that when such a meaning can be discovered the etymology of the name and the role of the woman in the narrative coincide. It is concluded that the statement of Davenport is unfounded.

In the next section of chapter two the problem of mixed marriages is considered. As in the Old Testament and most particularly in the writings of Nehemiah, marriage with foreigners is strictly forbidden, for this will defile Israel. In this light the wives and descendants of the sons of Jacob are considered. All of this material leads to the conclusion that the women are a very significant factor in the presentation of a pure Israel by the author of Jubilees.

The next chapter on chronology begins by noticing once again the relatively minor scholarly influence in this area. The purpose of the chapter is to discover if there is a design or plan in the chronology of the work. By comparing the numbers found in MT, LXX and SP with Jubilees, it is shown that Jubilees and SP have much in common. These comparisons are charted in two ways. First, each list is compared simply by listing the numbers. In this chart the numbers for each patriarch are subtracted and often patterning can be observed. Then the dividends are subtracted from each other, often showing further patterning. The second chart places this fourth column of numbers on a separate graph by which patterning can be detected more easily. It is suggested that behind these lists is a stock chronology. It is concluded that SP is closest to the original and MT, LXX and Jubilees are adaptations.

A very interesting pattern is exhibited when SP and Jubilees are compared. While the numbers for the early patriarchs (Adam to Noah) are identical, those from Terah to Joseph differ in each instance by either the number of days in a lunar year (354) or a solar year (365). It is shown that once again, as in the chapter on genealogy, the patterning fits the narrative. Terah (354 difference between SP and Jubilees) augurs and divines while Abraham (365) observes the true calendar. The 365 is difficult to account for, but suggests that another calendrical system is operating in the mind of the author, at least as it relates to chronology.

A discussion of the jubilee in Jubilees is necessary before the design in Jubilees can be considered. Also, the works of some design

theorists are examined. It is concluded that the design in Jubilees, while having some minor future considerations, is mainly concerned with past history. The only era that is important is that from creation to Sinai and future eras while alluded to in chapter 50 are of secondary importance. His purpose is to present a calendar and a 49-year-jubilee system that works.

Finally the implications of the thesis on the questions of authorship and date are indicated. It is concluded that the author is a member of an unnamed conservative-pietist sect, one of many in the second century B.C. The date is conjectured to be later than Antiochus IV, when the calendar would be of central importance to sectarian Jews who had been forced to worship on days derived from a luni-solar calendar. The author of Jubilees seizes the opportunity to present the early patriarchal history within the bounds of his conservative theology which holds to a 364-day non-intercalated calendar. He speaks polemically of the fact that his system is part of the ordered creation, a system which was observed before the formation of the world and which he expects will continue forever.

Some suggestions for further research are offered.

ACKNOWLEDGEMENTS

It would be impossible to write a thesis without the aid of many significant people. Foremost among those who spent much time and energy working through and correcting my material is Professor James Barr of Christ Church, Oxford. As my thesis supervisor, and my first Ethiopic teacher, I shall forever remain indebted to him for his clear and accurate counsel, his ability to raise the most significant questions, his perseverance with my appointment at McMaster Divinity College, Hamilton, Ontario, Canada which caused me to leave Oxford earlier than planned, and of course for the friendship and gracious hospitality that my family and I enjoyed in the Barrs' home. Needless to say, while Professor Barr has eliminated many errors from the thesis, any that may remain are entirely the responsibility of this writer.

Numerous other Oxford scholars have helped me considerably. I wish to thank Dr. Rex Mason for his careful reading and comments on most of the work, Dr. Geza Vermes for his lectures on Qumran, Dr. Sebastian Brock for discussing a few technical points with me and Mr. Karl Fech, now of Canada, who encouraged me to publish a short piece on Jubilees and who has been an encouragement throughout the project.

Others outside of Oxford deserve particular mention. Professor Stefan Strelcyn of Manchester was a valuable asset in obtaining micro-film copies of Ethiopic manuscripts. Miss K. Cann, Assistant Archivist at the Bible Society, London, England not only helped me locate their Ethiopic manuscript of Jubilees but she also photocopied it in three-quarter reduced size, backprinted it and air-mailed it to Canada.

Others offered assistance of a financial nature. McMaster Divinity College not only encouraged my academic pursuit, but provided substantial financing and a position at their school. Eastern Nazarene College, Phi Delta Honour Society, provided a loan. Through Regent's Park College I obtained a Hebrew Scholarship and the Giblin Travel grant. Thank you to all who made these gifts and loans possible.

Finally, it was a pleasure to enjoy the Oxford experience with my very best friend, my wife, Hazel. Not only did she provide a good home, care for our boy Tyler with enthusiasm, but she also supported, encouraged and typed her way through various drafts. Only recently due to the birth of our second son Aaron and her full-time teaching position has she surrendered the typing to Mrs. Joan Southam and Mrs. Merle Caldwell. May the reward be worth her efforts.

TABLE OF CONTENTS

ABSTRACTS ii & iii

ACKNOWLEDGEMENTS ix

TABLE OF CONTENTS xi

TABLE OF FIGURES xiv

ABBREVIATIONS xvi

INTRODUCTION 1

A. *The Importance of Jubilees and the Modern Revival of Interest* 2

B. *From Qumran to the Present Day* 3

a. *Testuz* 3

b. *Davenport* 5

c. *VanderKam* 6

C. *The Present Study* 8

CHAPTER 1: THE CALENDAR IN THE BOOK OF JUBILEES 11
Internal Evidence

A. *The Calendar of Jubilees* 16

a. *The History of the Jubilees Calendar* 16

b. *The Waving of the Omer* 17

c. *The Beginning of the Week* 20

d. *The Actual Jubilees Calendar* 24

i. *The New Moon Day:* ωcϕ (*šarq*) 24

ii. *Šarq in Months I, IV, VII and X* 29

1. *Jub 4:17-19* 32
2. *Jub 25:16a* 32
3. *Jub 3:8-17* 32
4. *Jub 5:22-32* 34
5. *Conclusions* 38

e. *The Beginning of the Day in Jubilees* 41

i. *Jub 5:23* 41

ii. *Jub 27:19* 42

iii. *Jub 32:1-34* 43

iv. *Jub 49:1-23* 47

f. *The Festivals* 55

i. *Feast of Weeks* 55

ii. *The Feast of Tabernacles* 64

B. *Jubilees, 1 Enoch and Qumran* 70

a. *Jubilees and 1 Enoch* 70

b. *Jubilees and Qumran* 72

i. *The Jubilees Fragments from Qumran* 73

1. *11QJub 1 = Jub 4:7-11* 73
2. *11QJubM3 = Jub 4:16-17* 73
3. *11QJub4 = Jub 12:15-17* 73
4. *11QJub5 = Jub 12:28-29* 73
5. *1QJub 17 = Jub 27:19-20(21)* 73
6. *2Q19 = Jub 23:7-8 (two numbers)* 74

ii. *The Calendar of the Qumran Documents* 74

iii. *Solar References in Jubilees and Qumran* 76

iv. *The Priestly Courses* 79

1. *2 Chronicles 24* 79
2. *Mishmarot at Qumran* 80

v. *The Temple Scroll* 83

C. *Conclusion* 84

CHAPTER 2: GENEALOGY IN JUBILEES 87

A. *The Names of the Wives* 89

B. *Mixed Marriages in Jubilees* 103

C. *A Wife-Naming Tradition - Jub 34:20-21* 110

D. The Descendants of Ya^{c}qob (Jacob) 113

E. Conclusion 114

CHAPTER 3: CHRONOLOGY IN JUBILEES 126

A. The Chronological Numbers of MT, LXX, SP and Jubilees Compared 129

a. The Style of Genesis and Jubilees Compared 131

b. Design in the Various Birth Relationship Traditions of the Patriarchs 137

i. MT and SP Patriarchal Birth Relationships 138
ii. MT and LXX Patriarchal Birth Relationships 141
iii. LXX and SP Patriarchal Birth Relationships 143

c. Design in the Birth Years of the Jubilees Patriarchs 145

i. Jubilees and MT Patriarchal Birth Years 146
ii. LXX and Jubilees Patriarchal Birth Years 148
iii. SP and Jubilees Patriarchal Birth Years 150

B. Theories of Design in History 156

a. Previous Attempts at a Solution 157

i. Testuz 157
ii. Davenport 159
iii. Grabbe 161

b. The Length and Purpose of the Jubilee in Jubilees 162

c. Design in Jubilees 166

CHAPTER 4: CONCLUSION 170

A. The Questions of Authorship and Dating 170

B. The Relationship of the Calendar to Chronology 175

C. Future Studies in Jubilees 177

ENDNOTES: Introduction 179
Chapter One 183
Chapter Two 205
Chapter Three 214
Chapter Four 220

BIBLIOGRAPHY 222

TABLE OF FIGURES

CHAPTER 1

Figure	1	The Calendar of Epstein	18
	2	The Calendar of Jaubert	20
	3	The Calendar of Morgenstern	24
	4	Uncleanness of Adam	34
	5	Jewish Flood Calendars	36
	6	The Original Jubilees Calendar	40
	7	Beginning of the Day	46

CHAPTER 2

Figure	1	The Ancestors of Jacob	108
	2	The Sons of Jacob and Their Wives	111
Table	1	From Adam to Noah (Ethiopic)	117
	1a	From Adam to Noah (Transcription)	118
	1b	From Adam to Noah (Charles)	119
	2	From Noah to Reu (Ethiopic)	120
	2a	From Noah to Reu (Transcription)	121
	2b	From Noah to Reu (Charles)	122
	3	From Reu to Abraham (Ethiopic)	123
	3a	From Reu to Abraham (Transcription)	124
	3b	From Reu to Abraham (Charles)	125

CHAPTER 3

Figure	1	Simple Segmented Genealogy of Genesis 5	133
	2	MT Birth and Death Years of the Patriarchs	135

CHAPTER 3 (continued)

3	SP Birth and Death Years of the Patriarchs	136
4	Birth and Death Years in Jubilees	136
5	MT-SP Birth Years	139
6	D of D for MT and SP	140
7	MT-LXX Birth Years	141
8	D of D for MT and LXX	142
9	LXX-SP Birth Years	143
10	D of D for LXX and SP	144
11	Jubilees-MT Birth Years	146
12	D of D for Jubilees and MT	147
13	Jubilees-LXX Birth Years	149
14	D of D for Jubilees and LXX	150
15	Jubilees-SP Birth Years	154
16	D of D for Jubilees and SP	155

ABBREVIATIONS

AB	*The Anchor Bible.* Edited by W.F. Albright and D.N. Freedman. (Garden City, New York)
AM	*anno mundi*
ASTI	*Annual of the Swedish Theological Institute.* (Leiden)
BA	*The Biblical Archeologist*
BASOR	*Bulletin of the American Schools of Oriental Research*
BDB	F. Brown, S.R. Driver, and C.A. Briggs, *A Hebrew and English Lexicon of the Old Testament.* (Oxford: 1906)
Bib	*Biblica*
BJRL	Bulletin of the John Rylands Library
BZAW	*Beihefte zur Zeitschrift für die alttestamentliche Wissenschaft*
CBQ	*Catholic Biblical Quarterly*
CD	The Cairo Damascus Document (Zadokite Document)
CRINT	*Compendium Rerum Iudaicarum ad Novum Testamentum*
DJD	*Discoveries in the Judean Desert* (of Jordan) (Oxford: 1955--)
EGen	The Ethiopic Version of Genesis
EVQ	*Evangelical Quarterly*
ExpT	*Expository Times*
HThR	*Harvard Theological Review*
HUCA	*Hebrew Union College Annual*
ICC	International Critical Commentary
IDB(S)	*Interpreter's Dictionary of the Bible,* 4 vols. and Supplement. (New York: 1962-1976)
IEJ	*Israel Exploration Journal*
JBL	*Journal of Biblical Literature*

JE	*Jewish Encyclopaedia*
JJS	*Journal of Jewish Studies*
JQR	*Jewish Quarterly Review*
JSJ	*Journal for the Study of Judaism*
JSOT(S)	*Journal for the Study of the Old Testament* and Supplement Series
JSS	*Journal of Semitic Studies*
JThS	*Journal of Theological Studies*
LJ	The Latin Version of the Book of Jubilees
LXX	Septuagint
MGWJ	*Monatschrift für Geschichte und Wissenschaft des Judentums*
MS(S)	manuscript(s)
MS A	Bibliothèque Nationale. *Éthiopien* 51. Fifteenth Century
MS B	British Museum. *Kufale* . OR485. Sixteenth Century
MS C	University Library Tübingen
MS D	M. d'Abbadie
MS E	British & Foreign Bible Society London. Twentieth Century?
MT	Massoretic Text of the Hebrew Old Testament
NTS	*New Testament Studies*
PEQ	*Palestine Exploration Quarterly*
1QapGen	*The Genesis Apocryphon*
1QH	The *Hodayot* Psalms from Qumran, Cave 1
1QM	The Scroll of the War of the Sons of Light Against the Sons of Darkness from Qumran, Cave 1

1QpH	The Habbakkuk Pesher from Qumran, Cave 1
1QS	The Rule of the Community from Qumran, Cave 1 (Manual of Discipline) 1 Q Serek
RB	*Revue Biblique*
REJ	*Revue des études juives*
RHR	*Revue de l'histoire des Religiones*
RQ	*Revue de Qumrân*
SP	The Samaritan Pentateuch
SBLDS	Society of Biblical Literature Dissertation Series
SEÅ	Svensk Exegetisk Årsbok
ST	*Studia Theologica*
SVT	*Vetus Testamentum Supplements*
T12	The Testaments of the Twelve Patriarchs
TDNT	Kittel's *Theological Dictionary of the New Testament*
TS	The Temple Scroll from Qumran
VT	*Vetus Testamentum*
ZAW	*Zeitschrift für die alttestamentliche Wissenschaft*
ZDMG	*Zeitschrift der deutschen morgenländischen Gesellschaft*
ZNW	*Zeitschrift für die neutestamentliche Wissenschaft*

STUDIES IN THE BOOK OF JUBILEES: THE THEMES OF CALENDAR, GENEALOGY AND CHRONOLOGY

INTRODUCTION

The book of Jubilees (Jub) is a re-working[1] of part of the Torah, Genesis (Gen) 1 to Exodus (Exod) 12, with many deletions but also a multitude of additions. One of the most notable deletions from Genesis is the series of accounts of a patriarch going down into a foreign country with a wife whom he passes off as his sister. In Jubilees the story occurs only once and the genealogical material presented with the narrative confirms the fact for the reader that Sarah is the sister of Abraham. Thus any hint at deception is diverted. The purpose of these changes made to the Torah is to present the patriarchs of the Genesis narrative in a more favourable light, to show the reader of Jubilees that the patriarchs kept the Torah even before it was given to Moses on Mt. Sinai.[2]

The author of the book used a "flashback" technique to present his material. While the work contains fifty chapters,[3] chapters two through forty-nine include the history of the world from creation to Sinai. The work begins in chapter one on Sinai and then returns to the same place in chapter fifty.

Interwoven amongst these narratives are some features unique to Jubilees. Allusions to other canonical reports,[4] non-canonical traditions[5] and detailed calendrical and genealogical material are adapted by the author and are merged with the Genesis-Exodus narrative. Long eschatological digressions[6] are encompassed by the narrative in such a way that the narrative still has a fluidity. It is a masterly representation of Torah, tradition and ingenious literary devices.

A. The Importance of Jubilees and the Modern Revival of Interest

In 1844, H. Ewald[7] published notice of an Ethiopic manuscript of the Book of Jubilees which had been discovered by a Dr. Krapff in an Abyssinian church. The manuscript had been brought by him to the University Library of Tübingen where it remains today. R.H. Charles was later to designate it as Manuscript A in his critical edition of 1895.[8] Seven years after Ewald's notice, Augustus Dillmann translated the manuscript into German[9] and in 1859[10] the Ethiopic manuscript was published. The value of the book was recognized by many scholars, but no consensus concerning the questions of date and authorship was reached. Every possibility was considered from the idea that the author was an Essene[11] to the idea that he was an Egyptian Jew.[12] It was dated as early as 320 B.C.[13] and as late as the mid-first century A.D.[14]

Not until 1885 was the work made available by Schodde[15] to the English-speaking world. His translation was soon superseded by the now standard works of R.H. Charles, based on new manuscripts which were used in his critical edition and on which his commentary[16] was based.

Between 1902 and 1952 interest centered on midrashic[17] and rabbinic[18] elements but the interest in the book was not nearly as fervent as it was to be in the years after the Dead Sea Scrolls discovery where at least 19 fragments of the work in Hebrew were discovered. The revival of interest in the work was due in part to this discovery and the possible calendrical coincidences between Jubilees and the Qumran writings first noticed by Père D. Barthélemy.[19] Not only was it suggested that there was a possible link between the Jubilees and Qumran calendars, but it was soon suggested that the work was redacted at Qumran[20] and, on the basis

of the Genesis parallels, it was suggested that the work exhibited a Palestinian text type.[21]

B. From Qumran to the Present Day

It is a remarkable fact that the 1895 critical edition and the 1902 commentary, both written by Charles, are still standard works. Even if the Qumran finds had not contained fragments of Jubilees, new methods and approaches suggest that a reassessment of Jubilees is needed. A new critical edition using additional Ethiopic manuscripts was suggested for the early 1970's but this has not appeared to date.[22]

During the 1960's and 1970's three major works on Jubilees emerged. They are extremely important for all discussions on Jubilees and so a brief description of the work of each with some criticisms of them will be helpful for understanding how each one approached and used Jubilees.

a. Testuz

In 1960 the first detailed theological assessment of Jubilees since the Qumran fragment discoveries of the previous decade was presented by Michael Testuz.[23] His monograph, a topical study of some of the themes in Jubilees, dealt with motifs such as creation, covenants, angels and demons, the two moral ways, the law, calendar, eschatology, and relation to Essenes (Qumran).[24] His reaction to the calendrical studies of Mlle. Jaubert (see note 20 above) is perceptive and he argues for a consideration of the internal features of the Jubilees calendar exclusive of 1 Enoch or Qumran. Yet the book has numerous difficulties. He begins

the study with the supposition that Jubilees was written around 110 B.C., a conclusion which affects his judgment significantly. This is most clear in his identification of the author of Jubilees and the Essenes of Qumran. While one of the fragments of Jubilees found at Qumran has been dated to circa 110 BCE,[25] the author of Jubilees seems quite unaware of the conflict with Antiochus around 167 BCE.[26] In chapter four of the present thesis it will be argued that Jubilees was written circa 163-152 B.C.

Many scholars[27] have noticed a connection between the Essenes and the Pythagoreans, based on Josephus. Testuz, using this suspected connection, has developed an ingenious hypothesis concerning the calendar based on the occurrence of the number "fifty" in the Pythagorean system and the occurrence of the number in the Jubilees calendar.[28] For example, the sum of the sides of the Pythagorean triangle is 3+4+5=12, which is the number of the months in a year in Jubilees. These 12 months are grouped in four seasons of three months each. If the numbers around the right-angle are multiplied the product is another 12 (3x4=12). The sum of the sides of the right-angle is seven (3+4=7), and in Jubilees a week has seven days, a week of years is seven years and a jubilee has 49 (7x7) years. The sum of the square of the sides is 50 ($3^2+4^2+5^2=50$), the year of the jubilee celebration, which marks the end of the forty-ninth year and the beginning of the first year of the next jubilee.[29] The system of 50 years is thus related, according to Testuz, to the number seven.[30]

As attractive mathematically as this may sound, it should be noted that the number 50 does not appear in Jubilees. The 364-day calendar is related neither to the (7x50=350) Pentecontad calendar,[31] nor is a fiftieth year ever mentioned. In Jubilees there is no mention of an actual jubilee year[32] even though the jubilee of 49 years is an integral part of

the counting system.[33] Testuz states that the fiftieth year was not the end of a period of 49 years, but the beginning of a new period.[34] While this is possible, such a conclusion cannot be determined from the text.

Testuz has sought to understand the essential theology of Jubilees. On the basis of some distinct Qumran parallels and the acceptance of a 110 B.C. date, he concludes that the book was written by a member of the Essene sect.[35] In short, his attempt to write a theology of Jubilees without a more detailed examination of the literary structure of the work is premature.

b. Davenport

While Testuz suggested some editorial activity within Jubilees, not until the next decade did a full-scale study of the so-called sources of Jubilees emerge. This was in the form of a revised Vanderbilt doctoral thesis by Gene L. Davenport.[36] He challenged the unity of the work and suggested that two redactors were discernible. The first redactor (R^1) added 1:4b-26,29;23:14-31 and 50:5. The original composition (chapters 2-50) is dated by Davenport to the third century B.C.,[37] R^1 worked between 166-160 B.C.[38] He has extracted these passages as redactional because they "change the entire meaning of the book."[39]

His second redactor (R^2), whom he calls the sanctuary-oriented redactor, includes 1:27-28; part of 1:29; 4:26;23:21; and 31:14.[40] Davenport has suggested a Qumran redactor working during the time of Simon and John Hyrcanus in Jerusalem, and dates R^2 circa 140-104 B.C.[41]

The redactional thesis of Davenport has been uncritically accepted by John Nolland. In a recent article on the Sibylline Oracles 3:265-294,[42] he accepts the redactional hypothesis for Jubilees without

comment. Nolland uses the conclusions of Davenport to date the parallel passage in the Sibylline Oracles to the second century B.C. citing Davenport as his only authority.

There is however a difficulty with the divisional hypothesis of Davenport which has relevance for the present inquiry. Davenport admits that neither redactor saw any significant contradiction between his work and that of his predecessor[43] and concludes that their eschatological views are predominantly the same.[44] The question then is: Does the redactional hypothesis of Davenport have any validity for an understanding of Jubilees?

It is doubtful whether one needs to assign minor discrepancies, (such as God commanding Moses (1:5) or an angel (1:27) to write) to a redactional framework. In a work of this kind, one would have expected a second redactor to have changed the previous reference to agree with his own. It seems more likely that what appears as a contradiction to us was not an inconsistency to the original author.

The main purpose of the work of Davenport is to examine the theology of the apocalyptic-eschatological sections of Jubilees.[45] Perhaps he is right that the eschatological sections do have a pre-history but what is more important is how the author of Jubilees has bonded these ideas into the narrative structure in such a way that these eschatological sections now shape the narrative. This important redactional question was ignored by Davenport.

c. VanderKam

The most recent thesis written on Jubilees is the dissertation by James C. VanderKam.[46] After cataloguing all the known Hebrew fragments

of Jubilees from the Qumran finds, he compares them with the Ethiopic and Latin texts and concludes that the critically established Ethiopic text comes very close to the original Hebrew text which is behind the Ethiopic text of Jubilees.[47]

Then in a sixty-page appendix VanderKam examines the variant readings between EJ and six biblical texts which include MT, SP, LXX, Old Latin and Ethiopic. He has carefully tabulated all instances of both agreement and disagreement between each of the texts and EJ. VanderKam concludes that Jubilees is a rewritten text of Genesis-Exodus with a good deal of the material copied verbatim. The Jubilees author merely added, noted and deleted where appropriate.[48] There can be little doubt that the author had a Hebrew text of Genesis-Exodus before him, whether written or mental. It is difficult to see how 742 agreements with the LXX,[49] 699 with SP and 648 with MT (not to mention agreements with Latin, Syriac and Ethiopic texts) are convincing proof that the text behind Jubilees' biblical coincidences was "an *early* Palestinian type".[50] If it agrees with them *all* in a great number of cases (the lowest is Ethiopic Genesis at 577) against the others, can such a claim as VanderKam has suggested be valid? Whether he is right or not on this point has little or no impact on the purpose of the present thesis.

His final section deals with the problem of the date of the book. His method here changes significantly from the previous sections of his work. The secondary literature is carefully sifted and analysed on major theological points. His conclusion is that Jubilees was written by a proto-Essene before the Qumran seclusion[51] and that the book must be dated between 161 and 152 B.C.[52]

VanderKam's work is generally very carefully done and has made

an important contribution to Jubilees studies by collecting all the Qumran fragments. He comes closest to understanding the real purpose and value of Jubilees when he looks to the extra-biblical material for the distinctive ideas of the Jubilees author.

It is on this point that our work builds. The literary structure which makes the work of Jubilees distinct will become our concern. And as has been said before, it is in view of this structure that the theology of Jubilees should be examined.

C. The Present Study

None of the previous studies has thoroughly examined the relationship of the calendrical, chronological and genealogical systems in Jubilees. Nor have they adequately shown how these interrelated themes tie the work together. The present study will examine these systems to determine their function within the narrative structure of Jubilees.

Chapter One will consider the problem of the Jubilees calendar. Three main questions will be considered: first, what is the actual Jubilees calendar? Second, how is this calendar related to the calendars of 1 Enoch and Qumran? Third, what is the significance of this calendar within Jubilees itself?

There are some minor questions which are necessary for the calendrical discussion which will also be considered. First, how long is a month in Jubilees? Second, is the Jubilees calendar practical or theoretical? Third, if it is not practical, what possible function could the calendar have?

The second chapter will deal with the fact that genealogies go hand-in-hand with chronological references. Since these references are dependent upon the calendar, the three themes will be shown to be interrelated. In the genealogical material, we find what at first seems to be casual references to the wives of the patriarchs. The importance of this new structural form of genealogy and the way in which it shapes the function of the genealogies within the narrative will be examined. Since Jubilees has recently been called "chauvinistic"[53] the unusual presence of women in the genealogical notations deserves careful scrutiny. Within these lists, the addition of women is related to righteousness[54] and the purity of the Israelite lineage. We will test the hypothesis that when both the mother and father of this holy lineage are themselves "pure" Israelites, the purity and righteousness of the offspring is almost ensured and that the purity of the child is directly dependent upon the genealogy of the mother.

The present thesis will examine the structure of the genealogies which include wives for each of the early Israelite patriarchs. This new form of genealogy and the way in which it shapes the function of the genealogical list within the narrative deserves our careful consideration.

The third chapter will consider the chronological references and their effect upon the overall structure of Jubilees. Although it is common knowledge that the chronological system in Jubilees and that of the SP are related, there have been only two major considerations of the significance of the numbers.

The first study of the chronology of Jubilees was that of M.J. Krüger,[55] who was dependent upon the early German translations of Ewald and Dillmann. His study was an attempt to understand and correct difficult readings presented by the Tübingen MS. The other major study on the Jubilees chronology by Ferdinand Bork[56] was interested in the differences between

the parallel numbers in Genesis. He was not concerned, however, with the question of why they were different, or of how the differences affected the function of the numbers within the narrative.

The present study examines the chronological system of Jubilees in order to determine if there is a plan or design in the structure. The numbers from the birth years of the patriarchs are compared between the MT, LXX, SP and Jubilees. It is concluded that there is an even closer relationship between SP and Jubilees than has been observed in the past. This raises the question of priority between these systems but a conclusion is withheld until the overall design of the schemes is discussed.

After considering some methodological considerations in chronological systems which are approximately contemporary with Jubilees, the design of Jubilees is examined.

Beginning with a discussion of the system of jubilees, weeks, and years, then by considering once again the proximity of the SP numbers, it is concluded that behind all of these systems (MT, LXX, SP and Jubilees) there is a chronology which has beem developed in two streams. The first moves from this chronology to the SP and then to MT and LXX. The second moves from this chronology to SP and then to Jubilees. This is of course an hypothesis, but in almost every instance it allows for the difference between SP and MT or LXX on the one hand and SP and Jubilees on the other.

This conclusion has far-reaching implications for the question of the date of Jubilees. While it seems reasonable to date Jubilees circa 161-152 B.C., this raises the possibility that the SP chronology was added to the text just before this time and also the possibility that the chronologies of the MT and LXX are contemporary with or later than Jubilees. The date is discussed in a final chapter along with the question of authorship. It is concluded that a conservative-pietist from a heretofore unnamed sect is responsible for the work. Some suggestions for further research are offered.

CHAPTER 1

THE CALENDAR IN THE BOOK OF JUBILEES

Internal Evidence

In Jubilees the calendar plays a distinctive role in that calendrical references are presented as an integral part of the work. The early history of the nation of Israel is structured around a dating system based on the number seven, applied to days, months, years, weeks of years and jubilees.[1]

The purpose of Jubilees which relates to the calendar is suggested by the prologue, "The account of the division of the days of the law and the testimony, of the events of the years, of their groupings of seven,[2] of their jubilees throughout all the years of the world." The "days of the law" (መዋዕላተ፡ሕግ፡) is a clear reference to a calendrical system which is to be enumerated and which is divisible by seven. This account of the division of "the days of the law" is not a book of instruction similar to the ten commandments,[3] but rather is a record of events to be kept for future generations (Jub 1:5).

Jubilees 1:26 enforces the idea that what Moses is to write is "...all those words which I declare unto you on this mountain, the first and the last, which will come to pass in all the divisions (ኵሉ፡ክፍሎ፡) of the days in the law and in the testimony and in the weeks and in the jubilees forever...."

What words were spoken to Moses which will come to pass? God had made known to him the history[4] from the beginning (ቀዳሚ፡) and what was to come (ወሀኒ፡ይመጽእ፡), of the division of all the days

of the Torah and of the testimony (Jub 1:4).[5] Thus he is given a picture of the past and a plan for the future. Moses does not write as he is told to do, but rather objects to God's turning away from the people and pleads for them, asking for a clean heart and a holy spirit to be put within them (Jub 1:19-21). He does not accept the picture of the people's rebellion and the retrieval of a remnant but wants all Israel to be protected as in the Egyptian deliverance.

God makes a concession and says that confession of their sin and that of their fathers will enable them to be called the children of God (Jub 1:22-25). It is likely that this refers to a remnant as the condition is placed on the people and God's responsibility is merely to circumcise the heart of the repentant and accept them as sons of the living God.[6]

Recently the unity of Jubilees, including this chapter, has been called into question. Davenport has seen Jub 1:4b-26 as a unit coming from a redactor whom he labels R^1. This passage, he suggests, adds a new element to Jubilees and changes the entire meaning of the book.[7] Both in this section, Jub 1:4b-26, which according to Davenport[8] is from R^1, and in the Angelic Discourse, Torah must be obeyed. There the reason is given for Israel's apostasy and God's position is clear. God will count them as righteous after they confess their sins (Jub 1:23). Because Jub 50:5ff has a similar theme anticipating the time when Israel will be renewed, Davenport places it within R^1 also.

In order to account for the diverse phrasing in Jub 1:29, Davenport is forced to extract linguistic similarities from the verse "The tables of Torah and of the testimony"[9] and name them as part of R^1. It should be noticed, however, that this terminology is as close to the wording of the prologue as it is to Jub 1:4b-26 and yet he does not claim the prologue for R^1.

The solution of breaking up the verse to answer such source-divisional hypotheses has created an artificial seam. While there are many difficulties in the verse,[10] the extraction made by Davenport does not suggest a solution to these problems.

The second division made by Davenport (R^2) answers the question of what the angel is to write. This addition, he claims, does not change the purpose of the work and the main point of difference is that the angel is being told to write.[11] If the addition of the so-called R^2 material does not alter the purpose of the book then is such a division justified?

Davenport has extracted R^2 because of its sanctuary orientation.[12] If a sanctuary reference is one of the criteria for determining R^2 it is unclear why he has not included Jub 1:17 and 6:14,[13] where allusions to the sanctuary are made, as part of R^2.

If Jub 1:17 is R^1 and not R^2, the similarity between the language of Jub 1:17 and that of 1:27 is striking.

Jub 1:17 ... ወኢሐንጽ፡ መቅደስየ፡ መኢስሎሙ

Jub 1:27 ... ይትሐነጽ፡ መቅደስየ፡ በማኢስሎሙ

It is not impossible to think that a redactor copied this phrase in Jub 1:27 from 1:17. But it is equally reasonable to suggest that expressions so similar are from the same hand.

It is in this verse (Jub 1:27) that God tells the angel to write for (dictate to?) Moses from the beginning of creation until the establishment of this sanctuary for eternity. This appears to be the same period of time for which Moses is to write, and thus the apparent contradiction.

A question which Davenport failed to ask was why a redactor

would add such a statement. To be sure, Jub 1:27 is the first reference to the Angel of the Presence (መልኣከ ፡ ገጽ ፡)[14] but this angel is of unusual significance for the Angelic Discourse beginning in Jub 2:1. It is this Angel who presents the history from creation to the Sinai law, to Moses who then writes it down. This is not inconsistent with either Jub 1:5 or 1:27 but clarifies those verses.[15]

In 1:5 a simple command is presented, followed by a more detailed command in 1:27. To ensure the accuracy of the record, the Angel of the Presence is commanded to write for (i.e. dictate to) Moses and then this angel dictates from his tablets to Moses. Moses does as he is commanded, but accuracy is ensured by the help of an Angel. The message is written by a human adding to the credibility of the work, but the divine authorship and the accuracy of the work is ensured by the aid of an angel. Thus, Jub 1:5 and 1:27 are not contradictory, but complementary, and a main support for Davenport's hypothesis is no longer left standing.[16]

It can now be suggested that Jub 1:4b-26 is not a separate unit surrounded by two smaller units, but the entire passage from the prologue to 1:29 is itself a unity. Moses is first of all given the Decalogue which God Himself has written. These tablets of stone, which are to be used for instructing the people, soon fade into the background as the next thirty-three days pass during which God recounts to Moses both past and present. Moses is told to listen carefully and write the words in a book. The assumption may be made that he did not write immediately, but wrote from

the heavenly tablets which the Angel of the Presence had written. This is the sum total of Jub 2:1-50:13. On this point the unity of the book does not need to be called into question.[17]

Although it is not possible to prove, it is reasonable to suggest that this problem of the days of the law was tied to an historical situation. Confusion of the calendar in the post-exilic period could be behind this statement of the divine origin of the division of days. This calendar of Jubilees attains a central position by being granted the status of תורה (תי).

The prologue has quite emphatically stated that the years of the world can be dated. Since the Bible itself does not contain a clear and explicit calendar, the need to produce one is a major purpose in the writing of Jubilees. Charles, speaking of the prologue as an account of the contents of Jubilees, was quite right when he said "It is at once a history and a chronological system dominated by the number seven."[18] Moses is taught the division of all the days of the law and the testimony (Jub 1:4)[19] which fall into a perfect number seven scheme.

It is clear then from the prologue that calendrical considerations are central in Jubilees. The exact nature of the calendar is, however, quite unclear as it is not presented in any detail. In this chapter the Jubilees calendar will be considered as the text of Jubilees presents it.

Many scholars have viewed the calendars of Jubilees, 1 Enoch and the Qumranites as identical. We will begin our discussion with an examination of the actual Jubilees calendar and then consider the question of the similarities, differences and possible relationship between these calendars.

A. The Calendar of Jubilees

a. History of the Jubilees Calendar

Scholarly discussion of the calendar in Jubilees has had an interesting history. In the nineteenth century, some major works on Jubilees all but ignored the question[20] while others saw the calendar as a central issue.[21] The calendar question in Jubilees was not ignored in the 1900's but was kept alive within the wider calendrical discussion by such persons as Hildegard and Julius Lewy.[22] In their search for evidence of a pentecontad system, they concluded that the intention of the author of Jubilees was to introduce a new calendar. They suggested that the only features of the old "Amorite" calendar still remaining in Jubilees are the Shemittah and Jubilee cycles.[23] The lunar month system of 29 and 30 days, found in the final redaction of Genesis 7 and 8, is replaced by a stereotyped system of eight months of 30 days and four months of 31 days.[24]

This monthly system for Jubilees was accepted by Jaubert,[25] and with modifications by Morgenstern.[26] These scholars not only accept the identification of the calendars of Jubilees and 1 Enoch, but also assume the validity of using the counting of the Omer waving from Lev 23:15-16 in assessing both the number of days in a month and the day which begins the week. As neither the Omer nor the day which begins the week is ever mentioned in Jubilees, a consideration of the major theories relating to Jubilees concerning the Omer and beginning of the week will be outlined. If it could be shown that these hypotheses concerning the Omer and Jubilees are not tenable, then serious doubt would be raised concerning the proposed Jubilees calendar as put forward by these theorists and the question

regarding the relationship between Jubilees, 1 Enoch and Qumran would be reopened.

b. The Waving of the Omer

Before considering the various theories on the "missing" Omer in Jubilees, a brief examination of the Omer text from Lev 23:15-16 is in order. The text reads:

וספרתם לכם ממחרת השבת
מיום הביאכם את עמר התנופה
שבע שבתות תמימת תהיינה
עד ממחרת השבת השביעת
תספרו חמשים יום ....

"And you will count from the morrow after the 'sabbath' from the day you brought the Omer (i.e. the wave-offering), there will be seven complete sabbaths, until the morrow after the seventh 'sabbath' - you will count fifty days...."

The difficulty here is the precise calendrical position of "the morrow after the Sabbath." Does this mean that the last day of the Feast of the Unleavened Bread is a Sabbath and that the day after the Sabbath which is Sunday is Omer day? Or does it imply that Unleavened Bread is not directly followed by a Sabbath but when it does occur, three or four days after Passover, then the next day is Omer day?

There are three given dates in Jubilees which the theorists have used in their calculations. These are I/14 (i.e. the fourteenth day of the first month) as the day of Passover (Jub 49:1) and III/15 as the Feast of Weeks (Jub 15:1; 16:13; 22:1). Also, the Week of Unleavened ends on I/21 (Jub 49:22). Thus, between the "morrow after the Sabbath" after I/21 and III/15 is 49 days.

There are two unknowns in this question. First, the precise date of the omer, and second, the number of days in a month. If either of these could be determined in Jubilees, the other would be calculable.

In 1891 an attempt at a solution to this problem was made by Epstein.[27] After examining the solution to the problem of the morrow after the Sabbath by the Samaritans, Sadducees and Karaites against the Pharisees,[28] he suggested that all of the festivals in Jubilees with the exception of "le Jour des Expiations" began on Sunday and consequently, Pentecost (Feast of Weeks) fell on a Sunday. By taking the Feast of Weeks on III/15 as a given, he argued with the support of Frankel[29] against Beer that the Omer day was I/22 and the Feast of Weeks fell 49 days later on III/15. The solution of Epstein depended on a system of thirteen months of 28 days, against Beer's solution which argued for 12 months of 30 days in which the Feast of Weeks would fall on III/11. Beer's solution is not supported by the evidence in Jubilees. The calendar of Epstein can be thus diagrammed as follows:

Figure 1

	I				II				III			
Sunday	1	8	15	*22*	*1*	*8*	*15*	*22*	*1*	*8*	*15*	22
Monday	2	9	16	*23*	*2*	*9*	*16*	*23*	*2*	*9*	16	23
Tuesday	3	10	17	*24*	*3*	*10*	*17*	*24*	*3*	*10*	17	24
Wednesday	4	11	18	*25*	*4*	*11*	*18*	*25*	*4*	*11*	18	25
Thursday	5	12	19	*26*	*5*	*12*	*19*	*26*	*5*	*12*	19	26
Friday	6	13	20	*27*	*6*	*13*	*20*	*27*	*6*	*13*	20	27
Sabbath	7	14	21	*28*	*7*	*14*	*21*	*28*	*7*	*14*	21	28
					7 days				28 days			
												14 days

Passover is I/14, Unleavened is I/15-I/21, Omer-waving is I/22 and seven sabbaths later falls the Feast of Weeks on III/15. Epstein concludes that "Toute autre combinaison est impossible."[30]

R.H. Charles agreed with Beer that Frankel was wrong in suggesting that the Jubilees calendar was one of thirteen months of 28 days each and so it is not surprising that he does agree with Epstein that two calendars are functioning in Jubilees.[31] The only objection Charles raises to the proposal of Epstein is that the four festivals ordained by Noah in 6:23-29 are determined according to the twelve months of the solar year.[32] It should be noted that Charles read ωCΦ as "first day of the season" *and* "first day of the month", a conclusion which will need careful examination.[33] What is significant for the present is Charles' acceptance of Epstein's interpretation of "the morrow after the Sabbath" as I/22 for Omer day.

This analysis was accepted until after the appearance of the Qumran material when certain scholars[34] suggested that there might be a relationship between the calendar of this newly discovered Dead Sea sect and Jubilees. The Qumran year according to Jaubert consisted of four seasons (364÷4=91), which were divided into three months of 30, 30 and 31 days. As Epstein discovered, if the Omer was waved on the morrow after the Sabbath or I/22, in a 30-day month system, the Feast of Weeks fell not on III/15 but on III/11. While Epstein had accepted I/22 as a Sunday and worked *forward* to III/15, Jaubert did not accept I/22 as a Sunday and calculated *backwards* from III/15. When she did this calculation, using months I and II with 30 days each, she arrived at I/26 for the morrow after the Sabbath. This then meant that I/25 was a Sabbath and, by counting back to I/1, she determined that the week, month and year began on a Wednesday

and not a Sunday as had been previously assumed.[35]

Figure 2

	I					II					III				
A (Wed)	1	8	15	22	29		6	13	20	27		4	11	18	25
B	2	9	16	23	30		7	14	21	28		5	12	19	26
C	3	10	17	24		1	8	15	22	29		6	13	20	27
D (Sabb)	4	11	18	25		2	9	16	23	30		7	14	21	28
E	5	12	19	26		3	10	17	24		1	8	15	22	29
F	6	13	20	27		4	11	18	25		2	9	16	23	30
G	7	14	21	28		5	12	19	26		3	10	17	24	31
				5				+30					+14=49+1		
													=111/15		

c. The Beginning of the Week

Jaubert[36] finds support for the idea that the week begins on Wednesday as follows. It was on this day (the fourth day of the week) that the luminaries were created which control the operation of the calendar. Before these heavenly elements begin to control the calendar, there are three "non-days", that is, they are not a part of the calendrical year because they preceded the creation of the heavenly luminaries which control the calendar.[37]

This calendar with Wednesday as the first day of the week is known from Al-Biruni. He suggests that the calendar was used by the Maghariyyah sect (the name in Arabic meaning "men of the caves") who lived in Palestine in the first century. They have long been identified with the Essenes[38] and so it was a simple deduction to make after the

discovery of the Qumran scrolls to identify the Maghariyyah with the Qumranites. When fragments of Jubilees were found at Qumran, on the basis of the evidence from Al-Biruni who lived 1,000 years after Qumran, the connecting link between Jubilees and the beginning of the year on Wednesday was considered to have been found.

It is difficult to understand how scholars could think that the Jubilees calendar had a beginning on Wednesday when it is so clear in Jub 2:1 that God observed ኣሰንበተ፡በዕለት፡ሳብዕት "the Sabbath on the seventh day", and on the first day God created night and day (Jub 2:3).[39] Day and night are functional before the creation on day four of the sun and moon which control day and night. The sun is given control over days, weeks (ሰንበታት) months,[40] festivals, years, shemittahs, jubilees and the season of the year (Jub 2:9).[41] There is, however, no indication that the calendar begins on this day, the day of the creation of the sun; but for the Maghariyyah calendar, no such suggestion would likely ever have been made for Jubilees.

The problem with the logic behind the equating of the Maghariyyah calendar and that of Jubilees is that both calendars must be identical in all respects. Whether or not the Maghariyyah are a survival of the Qumranites is, of course, still open to question, but if Broyde is right when he suggests that, in the calendar of the Maghariyyah, months were reckoned from the sighting of the new moon, the question of the inter-relatedness of the two calendars must remain open. The difficulty of "new moon" in Jubilees will be considered below, but what is clear in Jubilees is that the calendar is set by calculation (Jub 6:23, 26-36) and not by observation of the moon and its cycles. If the calendars hold discrepant positions on this basic point, then a caution must be

made concerning the possibility that the week begins on Wednesday in Jubilees.

Second, Jaubert has suggested that in her proposed Jubilees calendar the Sabbath journey restriction (Jub 50:8) is upheld. The patriarchs do not travel on the Sabbath.[42] She also suggests that Wednesday, Friday and Sunday are the three liturgical days in Jubilees,[43] a theory which has been rejected recently by Baumgarten[44] and VanderKam,[45] both demonstrating that in Jubilees weekdays are unimportant (except for Sabbath) and in fact, weekdays are not even mentioned.[46]

Some additional reactions to the identification can be raised. First, if there is no internal evidence in Jubilees for a Wednesday beginning[47] then it must remain speculative whether I/26 is a Sunday and I/25 the Sabbath after the Festival of Unleavened Bread, attractive as such a suggestion may appear.

What is significant is that, if one accepts the presuppositions of Epstein, the year begins on Sunday, and the month has 28 days; then the morrow after the Sabbath after Unleavened Bread plus 49 days brings one to III/15 for Feast of Weeks. The very same is true if one accepts the presuppositions of Jaubert; the year begins on Wednesday, months I and II have 30 days; the morrow after the Sabbath after the Week of Unleavened plus 49 days brings one to III/15. Such a situation shows how difficult the Jubilees material is to interpret. Both conclusions are mathematically possible depending only upon one's position concerning the number of days in a month. Further evidence is needed from Jubilees itself before a conclusion can be drawn regarding the length of a month in Jubilees. We shall turn to this question presently.

Another question concerning Jaubert's theory needs to be raised.

One must also question the use of the biblical waving of the Omer in Leviticus when *it is not to be found in Jubilees.*[48] To use the Omer day under such circumstances is questionable. It seems reasonable to suggest that the internal elements of the Jubilees calendar cannot be determined from a discussion of the Omer ceremony when the Omer ceremony is ignored by the author. The reason it is not mentioned cannot be determined. Is it possible that it did not fit with the monthly system that our author is using?

Third, in addition to the texts dealt with by Baumgarten about the restriction of travel on the Sabbath[49] it should also be noted that in Jub 48:15 the children of Israel flee from Egypt while Prince Mastema is bound. They flee on days I/15, 16, 17 and 18. I/18 is a Sabbath in the calendar of Jaubert which would also break the travel restriction.[50] The objections raised to the calendrical solution of Jubilees by Jaubert suggest that a detailed discussion of the actual Jubilees calendar is in order, as her proposal is inadequate as a representation of the actual Jubilees calendar.

Morgenstern has added nothing to the Omer discussion. He has argued that the 30, 30, 31-day season suggested by Jaubert is from 1 Enoch, while Jubilees has 31, 30, 30 days. His reconstruction by his own admission[51] is not very different from Jaubert's, as it moves the beginning of the week and year from Wednesday to Tuesday. (See Figure 3)

In this reconstruction only Month I commences on a day different from the months of the calendar of Jaubert. As in Fig. 2, months II and III begin on Friday and Sunday respectively. Counting back from III/15 in this calendar, Omer day falls not on I/26 (or I/22) but on I/27. The cautions raised above concerning Omer day in Jubilees still apply.

Figure 3

	I					II					III				
A (Tues)	1	8	15	22	29		5	12	19	26		3	10	17	24
	2	9	16	23	30		6	13	20	27		4	11	18	25
	3	10	17	24	31		7	14	21	28		5	12	19	26
	4	11	18	25		1	8	15	22	29		6	13	20	27
	5	12	19	26		2	9	16	23	30		7	14	21	28
	6	13	20	27		3	10	17	24		1	8	15	22	29
	7	14	21	28		4	11	18	25		2	9	16	23	30

d. The Actual Jubilees Calendar

In the preceding discussion two unknowns were present: Omer day and the number of days in a month. They are directly related and if one had been known, the other could have been calculated. Since there is no mention of an Omer ceremony, Omer day cannot be used to determine the number of days in a month in Jubilees. It is now expedient to examine the text of Jubilees for evidence of the actual Jubilees calendar.

i. The New Moon Day: ʷCΦ (ʸsarq)

The word ʸsarq which is translated by Charles as "new moon" in Jubilees appears 32 times.[52] Of these occurrences the one most often cited is Charles' reading of Jub 6:23 (but the exact sense of ʸsarq will be discussed below).

> And on the new moon (ʸsarq) of the first month, and on the new moon of the fourth month, and on the new moon of the seventh month, and on the new moon of the tenth month are the days of remembrance and the days of the seasons in the four divisions of the year.

These four days, as we shall see, have a religious significance. In the calendar of 1 Enoch these four days are added (1 Enoch 75:1) to the year of 360 days bringing the year to 364, but in Jubilees there is no indication that these four days are added to a 30-day monthly system. Rather, they are presented as an integral part of the year. In a calendar of 364 days, because it is divisible by seven, every day within the system will fall on the same day of the week and month and season every year. These four days by the very nature of the 364-day calendar are permanently fixed on their day (Jub 6:32). This rules out any possibility of šarq referring to an actual lunar sighting[53] but it is rather a technical term whose exact dates must be carefully examined.

Some scholars have viewed šarq as a technical term having the meaning "beginning" or "first day". In her earliest work, Jaubert says "L'expression 'nouvelle lune' si fréquente dans les Jubilés (traduction éthiopienne) designe simplement le premier jour du mois. La traduction latine porte partout *primo (prima)* die,"[54] a conclusion which is agreed to by Morgenstern [55] and is supported by VanderKam in his reconstruction of the Qumran fragments where he uses the Hebrew חדש.[56]

There is internal evidence in Jubilees which cannot support the suggestion that šarq is a translation of חדש and means simply the first day of the month. In Jub 28:14-15 two sons are born to two of the wives of Jacob. One is born on I/šarq and the other on III/15. Davenport recognizes that other texts suggest both I/šarq and III/15 are special days which he calls חדש[57] but he also recognizes the difficulty raised when III/15 is a חדש.[58] Davenport thus finds the discussion of sarq quite confusing.

An attempt to answer the problem of the šarq falling on III/15

was made by Bent Noack. Davenport documents the work of Noack in his bibliography but does not deal with the discussion of Noack. Noack suggests that the major deterrent to our understanding of šarq arises out of its confusion with the Feast of Weeks[59] which is called a šarq by the Ethiopic translation of Jubilees but which never occurs at the beginning of a month. The feast has three names in Jubilees: Weeks, First Fruits and Grain Harvest.

There are two other instances where a šarq occurs in month III: Jub 14:1 and 44:1. In Jub 14:1, Abram is approached by the Lord in a dream on the šarq of this month. The dream is a question and answer dialogue between Abram and the Lord concerning the seed of Abram. He has an heir, the Dammasek Eliezer, but he has no true seed. The reason he has a son but no seed is that the mother of this boy is not an Israelitess (see chapter on Genealogy below). In the dream Abram is told to sacrifice a heifer of three years, a goat of three years, a sheep of three years, a turtle-dove and a pigeon (Jub 14:9). This event happens in the month of First Fruits but the sacrifice is not a grain offering but an animal sacrifice different from the one presented by Noah in month III (Jub 6:3), but it is also related to a covenant. In Jub 6 the feast was twofold, referring to the two covenants, one individual and the other corporate. This covenant with Abram also occurs in month III and is related to the Noachid covenant (Jub 14:20).

The dream ends in Jub 14:9 and the next verse (see also Jub 14: 21) has Abram in Hebron on III/"middle of the month". The šarq during which the dream took place is not the beginning of the month.

According to Noack the term šarq is ambiguous except in Jub 14:1-20. In chapter 14 Abram *renews* the covenant "on that day"

[MS B reads ⵙⴷⵖⵜ: ⵍⵍⵖ: "on that night" but this is of no significance except that it allows time for the events of 14:1-20 to occur]. If 14:20 refers back to 14:10 "in the middle of the month"[60] and 14:1 on the šarq of the month, then only one day is mentioned in 14:1-20 as Noack has suggested. Yet it is not clear that the events III/šarq and III/middle of the month are the same day. If they are not, and this appears to be the most probable interpretation here, then we have šarq days both in the middle of the month and before the middle. In all probability the šarq days are III/1 and III/15. The šarq in the middle of the month falls on the day of covenant renewal which is III/15.[61]

Concerning Jub 6:1ff, Noack concludes that there are two covenants in the third month, one covenant forbidding the eating of blood on the first day of the month and a second covenant in the middle of the month celebrating the fact that there would never again be a flood.[62]

It is possible to view III/šarq and III/15 as the same day here in Jub 6:1ff. Noah and his sons leave the ark on III/šarq and build an altar to atone for the sins of the earth (Jub 6:1-2). The Lord then promises that he will not destroy the earth by a flood (Job 6:4). This is followed by a blessing (Jub 6:5,9), food laws (Jub 6:6-7) and a prohibition of murder (Jub 6:8).[63] Noah and his sons swear that they will not eat blood and Noah makes a covenant before the Lord in this month (Jub 6:10). There is no textual reason for believing that the events of Jub 6:1-10 do not all occur on the same day, III/15, which is named as the same day as the renewal covenant of Abram in Jub 14:20, "And on that day [III/ ⵡⵛⵖ: III/15], we made a covenant with Abram, according as we had covenanted with Noah in this month...."

It can now be concluded that in Jub 6:1 and 14:1 šarq can be interpreted not only as the beginning of the month but also as the Feast of Weeks in the middle of the month.

In Jub 6:11 it is stated that on this account a covenant is made with all of Israel (the giving of the Law recorded in Jub 1:1) *in this month*. This covenant with Noah is twofold:[64] first, it is individualistic as it is made with Noah and his sons, and second, it is also corporate, given to Israel forever (Jub 6:11-14). While it is possible that the twofold nature of the covenant depends on there being two covenants on different days in month III as Noack concluded, it seems more reasonable to assume that the covenant is said to be twofold in nature because it is both individualist and corporate and it is the Feast of Weeks and First Fruits. The Lord gives his reassurance (Jub 6:15-16) that his promise will be honoured. He will keep his part of the covenant and will never again destroy the earth by flood. The bow is set in the sky as a sign of the eternal nature of this covenant.

In Jub 44:1 a šarq day is mentioned *before* III/7. Israel leaves Haran on III/šarq and seven days later offers a sacrifice on III/7. There is no alternative but to conclude that the šarq falls on or before III/7.[65]

It appears as though šarq can have more than one meaning. It seems that both Jaubert and Davenport are partially right. The term šarq can mean "beginning" of the month and also it can function as a special day, in this case, the Feast of Weeks. Other šarq days are mentioned which do not fall in month III. An examination of these days should aid in our understanding of the term.

ii. Šarq in Months I, IV, VII and X

It has just been shown that the šarq in month III occurs on the fifteenth of the month. It is now necessary to determine on what day of the month the šarq falls in months I, IV, VII, and X, which are the only other months to have a šarq in Jubilees. From Jub 6:23 very little is learned about šarq days. They are special days and they divide the years into four equal seasons of 91 days. Each of these quarterly divisions has thirteen sabbaths (ሰንበታት) (Jub 6:29).

Using the 30, 30, 31-day system, it is possible to reconstruct a calendar displaying the seasons.[66] Since every three months is exactly 91 days in duration, šarq days could be either I/1, IV/1, VII/1 and X/1, or I/15, IV/15, VII/15 and X/15. If one accepts I/15 etc., then the beginning of the seasons do not correspond with the beginning of the months and so such a position is highly unlikely. There is, however, no suggestion made in the text supporting the position that the beginning of the months and seasons must coincide. Testuz, who thought Jubilees used a 30-day month, suggested that the extra day needed in three months to make a season total the required 91 days was a non-month day.[67] These days, he suggests, are referred to in Jub 29:15-16, and are the seasonal dividers in each year. It was first suggested by Ronsch[68] who was followed by Charles[69] that the four times are IV/1, VII/1, X/1 and I/1 when Jacob sends food to his mother at Hebron. There is, however, no good reason to connect this text with Jub 6:23 ff. In Jub 6:23 the four days mentioned are very specific days while in Jub 29:16 there is no indication that they are to be interpreted as specific days. Rather, it is more likely that these days would vary as there is no reason to fix

them to a specific day in the calendar. First, they are not festivals, and second, days between plowing and reaping, winter and spring, autumn and rain, would vary even in the most rigid calendrical system. The author of Jubilees has already presented his opinion on this matter (Jub 12:16-18). It cannot be claimed with any certainty that šarq days in a 30, 30, 31-day seasonal system coincide with I/1, IV/1, VII/1 or X/1; the texts only say for certain that the 'ašrāq (plural of šarq) are seasonal dividers and are 91 days apart.

If we apply these observations, that the 'ašrāq are seasonal dividers and 91 days apart, to a calendar composed of 13 months of 28 days each, it follows that the 'ašrāq obviously cannot fall on the same day of months I, IV, VII and X. But the text does not demand that they do. There is MSS support for the claim that the first šarq falls on I/1; and, if this can be demonstrated, then the šarq days in the other months can be calculated.

In Jub 7:1-2 after Noah leaves the ark, he plants vines and makes wine. This wine was kept until ዕለት፡ ቀዳሚት፡ በሠርቀ፡ ወርኅ፡ ቀዳሚት፡፡ወገብሬ፡ዕለተ፡ ዛኒ፡በዓል፡በፍሥሓ፡ "the first day on the šarq of the first month and he made that day a festival of joy...." In MSS B, C, D and E ዕለተ፡ቀዳሚት፡ is a qualifier of šarq. MS A has a few important changes. It reads ዕለት፡ ቀዳማሁ፡ ወበርቀ፡ ወርኅ፡ ቀዳሚ፡፡ ገብሬ፡ዓለ፡ዛኒ፡... If the period (፡፡) is ignored, this could be translated, "until its first day, *AND* on the šarq of the first month, he celebrated with joy...." MS A begins a new idea with šarq, while the other MSS express ሠርቀ፡ወርኅ፡ቀዳሚት፡ as a modifier of ዕለተ፡ ቀዳሚት፡ [70] MS A has changed the meaning so that šarq looks like a day other than the first day of the month I. As considerable changes have been observed elsewhere with MS A, we will follow the other MSS which all agree and view the šarq as being the same as I/1.

It is now possible to state six (6) known facts about the Jubilees calendar. The information collected is as follows:

1) The year has 364 days.

2) The year has 52 weeks.

3) The length of a month is uncertain.

4) There are four seasons of 91 days which begin with a šarq.

5) The first šarq begins on I/1.

6) The 'ašrāq fall in months I, IV, VII, and X.

7) A šarq falls on III/15.

Since the length of a month is uncertain, the day of the month where the seasonal dividers (šarq) fall still has not been determined. If the monthly system were one of 30, 30, 31-days, then the šarq would fall on I/1, IV/1, VII/1 and X/1. If, however, a 28-day month system were functioning in Jubilees, the šarq days would be I/1, IV/8, VII/15 and X/22. Both of these satisfy the requirements of being seasonal dividers but in only one system (30, 30, 31) do these dividers coincide with the beginning of the months.

The question now to be considered is the monthly system used by Jubilees. If Jaubert is right, that Jubilees exhibits months of 30, 30, and 31 days, then the 'ašrāq do fall on I/1, IV/1, VII/1 and X/1 and the meaning of šarq could be "first day" except in the case of III/15. If, however, a 28-day month is functioning, then the šarq does not begin the month and the meaning of šarq is not "first day" except when this refers to a season.

It is now expedient that the evidence for the length of a month in Jubilees be examined, which will in turn shed some light on a possible definition of šarq.

1. Jub 4:17-19

This passage alludes to the length of a month in Jubilees but no details are given and so it is of no help in the present discussion.

2. Jub 25:16a

In his consideration of the number of months in a year, Epstein,[71] followed by Testuz,[72] examined Jub 25:16a which reads ወያብዝኅ፡ ውሉዶስ፡ በሕይወትስ፡ ወይቁሙ፡ እኁልቍ፡ እኪወሪኅ፡ ዓመት፡

"And may he make thy children (ውሉዶስ፡) numerous during thy life, And may they arise according to the number of months in a year."

If ውሉዶ፡ is taken as meaning "sons of Jacob"[73] then this is an obvious reference to the 12 months in a year. A difficulty arises when it is realized that ውሉዶ፡ also means "children" for it is well known that Jacob had 13 children, 12 sons and a daughter Dinah. If she is included in the total, it is possible for this verse to be taken as evidence for a year with 13 months.[74] It should also be remembered that these words are in the mouth of a woman (Jub 25:14) and that women play a significant role in the book,[75] making the option that 13 months are intended an even greater possibility. Even so, this text is too ambiguous to be of any value.

3. Jub 3:8-17

The narrative of the purification of Adam and Eve after their creation has been seen as an adoption of an earlier tradition or possibly an original composition of the author of Jubilees.[76] It is unlikely that the origin of the tradition can be solved,[77] and so it is only possible to deal with the present use made of the tradition by the author.

The author has adapted the impurity law of Lev 12:1-5 (40 days for a male child and 80 days for a female child) to the creation of Adam and Eve. Unlike the quest for the day of the Omer, there are no unknown elements here and a simple calculation should enable the number of days in a month in this tradition to be discovered.

Adam is created in month I and on the sixth day of the first week (Jub 2:14), while Eve is created on the sixth day of the second week, or on the thirteenth day after the beginning of the creation of the world. Adam enters the Garden of Eden 40 days after I/6 and Eve enters 80 days after I/13.

There is a passage which has a firm date, with both month and day given, which will enable a calculation of the number of days in a month to be made. The text of Jub 3:17 reads:

ወሳኢቆ፡ ፍጻሜሁ፡ ለሰብዓቱ፡ ዓመት፡ እለ፡ ፈጸመ፡ በህየ፡
ሰብዓተ፡ ዓመተ፡ ፍንቁቀ፡ ወበኀልእ፡ ወርሓ፡ እመ፡ ዐሠሪ፡
ወሰቡዑ፡

"And after the completion of the seven years, which he had completed there, *seven years exactly* (ፍንቁቀ), and *in the second month, on the seventeenth day* (of the month), (the serpent came and approached the woman)...."

The day of the completion of the uncleanness of Adam occurred seven years before II/17 which must also have been II/17 in year one AM. Adam must have entered the garden on II/18, year one AM, and completed his first year in the garden on II/17, year two, and so on. Three very significant factors are now known: Adam was born on I/6, was unclean 40 days, and completed his 40 days on II/17. Month II incorporates 17 of these 40 days. Month I from day six to the end accounts for the remaining 23 days. The only possible explanation is that there were 28 days in month I.

The following chart demonstrates the phenomenon:

Figure 4

	I				II		
A	1	8 *3*	15 *10*	22 *17*	1 *24*	8 *31*	15 *38*
B	2	9 *4*	16 *11*	23 *18*	2 *25*	9 *32*	16 *39*
C	3	10 *5*	17 *12*	24 *19*	3 *26*	10 *33*	17 *40*
D	4	11 *6*	18 *13*	25 *20*	4 *27*	11 *34*	
E	5	12 *7*	19 *14*	26 *21*	5 *28*	12 *35*	
F	6 *1*	13 *8*	20 *15*	27 *22*	6 *29*	13 *36*	
G	7 *2*	14 *9*	21 *16*	28 *23*	7 *30*	14 *37*	

This tradition clearly exhibits a functional 28-day month. Yet, while this is the clearest evidence of the length of a month in Jubilees at this point in the discussion, it is still possible that the author used an existing tradition and neglected to adapt it to his 30, 30, 31-day system.

4. Jub 5:22-32

Within the flood narrative there is a reference to the number of days in a month. The waters were upon the earth ኀምስተ፡ ኢወሪሳ፡ ምእተ፡ ወኀምሳ፡ ዕለተ "five months - 150 days", or five months of 30 days each. This was accepted as the solution to the flood dating question by Jaubert.[78] Since five lunar months cannot total 150 days, Jaubert rejects a lunar month. However, from II/17 to VII/17 in her calendar is 152 days. She attempts to solve the difficulty by doing a double calculation. First, she counts 150 days from II/17 and arrives at VII/15, the day the water abated. Then she counts five months, or 152 days, to VII/17, the day the ark rested on Mt. Ararat.[79] This means

then that "the new moon of the seventh month" is VII/15, 150 days from II/17. We have already seen that VII/15 is a šarq day in the calendar of 28 day months!

To accept such a conclusion, Jaubert has had to rearrange the text, for the ark lands (Jub 5:28) before the waters abate (Jub 5:29). The 150 days are related not to the abatement of water, but to the resting of the ark. The only way to solve this dilemma would be to view "the new moon of the seventh month" as VII/1, thus having the waters abate before the ark lands, as in the Genesis account; but this date would then have no relationship to the 150 days at all.

Since a 28-day month tradition has been discovered in Jub 3, the flood account can be used as a test for its potential existence as more than just a casual use of an external tradition. In order to see the MSS numbers in relation to the numbers of the other early Jewish flood accounts they are collected in Fig. 5.

The relationships between LXX, Vulgate, Philo and the Book of Adam and Eve are quite obvious. The month adjustment of VII from II can be accounted for as a question of relations between the autumn and spring equinoxes.[80] EGen used a calculation based on the LXX, but all of the numbers except that for the visibility of the mountains are fifteen days earlier than the LXX numbers (see Fig. 5).

While the Jubilees MSS do not all agree in their dating, all of them begin the flood on II/17 which agrees with the MT. The water descends on VII/šarq. Using a 28-day month to calculate the 150 days from Jub 5:27, II/17 + 150 days is 195 days (28+17+150) from I/1, or VII/27 which agrees with the LXX, Vulgate, Philo and the Book of Adam and Eve; it is exactly 150 days and spans five months in duration which the text requires.[81]

Figure 5

JEWISH FLOOD CALENDARS[82]

Event	MT	LXX	Vulgate	Philo	The Book of Adam and Eve	Ethiopic Genesis	MS A	MS B,C,D	Original Jubilees?
Flood Begins	II/17	II/27	II/27	VII/27	G/27	II/12	II/17	II/17	II/17
Water Restrained							IV/8	IV/8	IV/8[83]
Water Descends							VII/15	VII/15	VII/27
Ark Rests	VII/17	VII/27	VII/27	II/27	T/27	VII/12			
Mountains Visible	X/1	XI/1	X/1	X/1	XI/1	X/1	X/1	X/22	X/22
Earth Visible									
Land Dry	I/1	I/1	I/1	VII/27	B/2	I/?	II/17	II/17	
Exit From Ark	II/27	II/27	II/27	VII/27	G/27	II/12	II/17	II/28	II/17

Using a 30, 30, 31-day month, the water descends on VII/15.[84] While there is a strong case to be made for the fifteenth as a šarq, this calculation does not satisfy the requirement of the text for a 150-day interval.

If, however, we calculate using 30 days in a month which the text here demands, and if we start our calculation from II/17, then the water abates on VII/17. This agrees with the MT. Depending upon which calendar is being used, there are three possible days on which the šarq might fall; 15, 17 or 27. Although the calculation using the 30-day month is the most literal, the šarq is not explained by this interpretation. There seems to be no evidence except in this text for VII/17 being a šarq.[85]

It is likely that this flood tradition circulated in some form before it was adapted by the Jubilees author. It preserved a calendar with 30-day months (which still must account somehow for the necessary four days needed to bring the total to 364) which also has šarq days. It clearly is not based on either the 28-day month or the 30, 30, 31-day month system and so we are confronted with yet another possible Jubilees calendar; one which seems to be quite similar to that of 1 Enoch with 30 days in a month and needing an additional four days to bring the year to 364.

The question can now be raised as to what the original Hebrew behind šarq may have been. The Hebrew חדש has been seen to be problematic as it cannot account for the varieties of meaning which are behind the Ethiopic šarq. It is possible that חדש was behind some of the šarq references, but that would mean that either the Greek or Ethiopic translators failed to distinguish between two different words, which seems unlikely.

The cognates שרק and סרק, which refer to the sunrise, are possible; but they are not listed in Jastrow and BDB records no Hebrew uses where they in fact refer to the sunrise.

Dillmann, in his Lexicon, adduces some form of זרח (such as מזרח) as the Hebrew behind the Ethiopic šarq.[86] Even a cursory check reveals similarities between these words. Both refer to the east, the dawn, the rising of heavenly bodies, and both have noun, verb and adjective forms.

It is most likely that מזרח and not חדש is behind šarq. Thus, I/šarq, IV/šarq, etc., can refer to the sun rising each quarter through the eastern region of the heavens,[87] a reference to the four seasons, and šarq alone can refer to the dawning (beginning) of a month or even of a special day. The Hebrew מזרח can account for all of the uses of šarq which חדש is unable to do.

The most important consideration with this conclusion is that the šarq no longer necessarily has to coincide with the *beginning* of months I, IV, VII and X, as it did when חדש was thought to have been its Hebrew equivalent. This has considerable implications for the Jubilees calendar, as can be seen in its reconstructed form which follows.

5. Conclusions

The situation of confusion about the length of a month, which we already find in the MT, is also found in Jubilees. There seems to be no sure way to determine the length of a month from internal evidence only. Whether we like it or not, the length of a month in Jubilees must remain uncertain.

Since the strongest evidence is for a month of 28 days, let us assume that this is the normative length of a month in Jubilees and

develop a hypothetical calendar in order to see what such a calendar would be like. The known information is as follows:

1. A seven-day week with no mention of weekdays other than the Sabbath,
2. 28-day months,
3. Four yearly divisions of 91 days each,
4. 13 weeks in a division,[88]
5. 364-day year,
6. No intercalation,[89]
7. Omer-day is nowhere mentioned,
8. The Feast of Weeks falls on III/15,
9. The word šarq is a technical term referring to a special day which occurs four times a year and acts as a link between the seasons (Jub 6:29). A šarq begins the year, the seasons, but not necessarily the months. Šarq-days fall in months I, III, IV, VII and X.[90] Only in month I is the šarq definitely on day one,
10. While the total number of months is never stated explicitly and the texts which deal with the question are ambiguous, in a 364-day year of 28-day months, there are exactly 13 months. The number 13 is intrinsic to the document (see above, No. 4) and can be accepted as referring to the number of months at Jub 25:16a.

The calendar in Figure 6 is a representation of the Jubilees calendar which satisfies the above conditions. It should always be remembered that the 30-day and the 30, 30, 31-day calendars are potentially present. It is possible that they represent elements of later calendars

Figure 6

THE ORIGINAL JUBILEES CALENDAR

Season 1

	I				II				III				IV				V			
Sun	ωC✝	8	15	22	1	8	15	22	1	8	ωC✝	22	1	ωC✝	15	22	1	8	15	22
Mon	2	9	16	23	2	9	16	23	2	9	16	23	2	9	16	23	2	9	16	23
Tues	3	10	17	24	3	10	17	24	3	10	17	24	3	10	17	24	3	10	17	24
Wed	4	11	18	25	4	11	18	25	4	11	18	25	4	11	18	25	4	11	18	25
Thur	5	12	19	26	5	12	19	26	5	12	19	26	5	12	19	26	5	12	19	26
Fri	6	13	20	27	6	13	20	27	6	13	20	27	6	13	20	27	6	13	20	27
Sabb	7	14	21	28	7	14	21	28	7	14	21	28	7	14	21	28	7	14	21	28

Season 3

	VI				VII				VIII				IX				X			
Sun	1	8	15	22	1	8	ωC✝	22	1	8	15	22	1	8	15	22	1	8	15	ωC✝
Mon	2	9	16	23	2	9	16	23	2	9	16	23	2	9	16	23	2	9	16	23
Tues	3	10	17	24	3	10	17	24	3	10	17	24	3	10	17	24	3	10	17	24
Wed	4	11	18	25	4	11	18	25	4	11	18	25	4	11	18	25	4	11	18	25
Thur	5	12	19	26	5	12	19	26	5	12	19	26	5	12	19	26	5	12	19	26
Fri	6	13	20	27	6	13	20	27	6	13	20	27	6	13	20	27	6	13	20	27
Sabb	7	14	21	28	7	14	21	28	7	14	21	28	7	14	21	28	7	14	21	28

Season 4

	XI				XII				XIII			
Sun	1	8	15	22	1	8	15	22	1	8	15	22
Mon	2	9	16	23	2	9	16	23	22	9	16	23
Tues	3	10	17	24	3	10	17	24	3	10	17	24
Wed	4	11	18	25	4	11	18	25	4	11	18	25
Thur	5	12	19	26	5	12	19	26	5	12	19	26
Fri	6	13	20	27	6	13	20	27	6	13	20	27
Sabb	7	14	21	28	7	14	21	28	7	14	21	28

which have crept into the document by editor-translators. It has been shown that where it is possible to calculate the length of a month within the narrative traditions of Jubilees they are either 28-days in duration or the text is too ambiguous for a definite decision to be made.

The calendar based on a 28-day month meets all of the requirements of the Jubilees calendar.

e. The Beginning of the Day in Jubilees

There are some questions concerning the Jubilees calendar which still must be answered. One of these is whether the day in Jubilees begins in the morning or evening. The reason why this is important is that the lunar or luni-solar and solar calendars differ at this point. The lunar begins in the evening while the solar begins in the morning. The luni-solar could begin in the morning or evening.

In Jubilees there are at least two explicit[91] and two implicit[92] references to the beginning of the day. Morgenstern has suggested that these examples verify that the day begins and ends in the evening.[93] It is necessary to examine these texts in detail to see whether they do uphold such a claim.

i. Jub 5:23

Morgenstern has seen evidence here for a beginning of the day in the evening. In this story of Noah's flood the ark is entered in month II on the šarq until the 16th. The Lord closed the ark on the 17th evening.[94] If the day begins in the morning, there is no logical explanation for not closing the ark until the following night - a period of at

least 24 hours.[95] If, however, the 16th ended at 6PM and the evening of the 17th began at 6PM, then between the entrance of the last animal into the ark on the 16th and the closure of the ark on the evening of the 17th only a few minutes need pass. It is quite likely that in this text the evening begins the day.

ii. Jub 27:19

There is a Qumran fragment dealing with this passage but it is too fragmentary to be of any value in assessing the beginning of the day.[96] There is a Latin text and a parallel passage at Gen 28:10ff which will aid in interpreting the text. There are some MSS divergencies but they are relatively minor and do not affect the present discussion.[97]

Where the Ethiopic reads ቦሠርቀ፡ወርኅ , the Latin has rendered the phrase as *primo die mensis primi*, "the first day of the first month...." The Latin parallel to šarq is unquestionably "the first day."

The actual *time* of the day in the Ethiopic MSS is "the evening" but there is a minor textual variation.[98] In the Hebrew from the Qumran fragment there is a lacuna where בערב is expected. Only the final ב of בערב can be clearly distinguished in the photograph,[99] along with numerous other letters in the line. The line can be reconstructed as follows:

לְמ֯[קום בער]ב ויט מן הדרך

"to the place in the evening and he turned from the way."[100] ערב must have been the Hebrew behind the Ethiopic and Latin.

The last three words of verse 19 are not preserved in the fragment, but are in the Gen 28:11 parallel: כִּי בָא הַשֶּׁמֶשׁ. Except for a minor change in MS C[101] the Ethiopic and Latin MSS agree.[102]

In the Genesis passage there is no clue given as no dates are cited by which the beginning of the day can be determined. Jub 27: 19 presents a different situation. Jacob leaves Beersheba (lit: "from the well of the oath" which the Ethiopic translator has not transliterated from Hebrew but has given an equivalent translation, which the LXX translator has also done) for Haran in the first year of the second week in the 44th jubilee (44/2/1). The month and day are not given. After travelling all day he comes to the place in the *evening*. The date is I/1 and the sun has set. If this evening is the first day of the first month of the first year of the second week of the 44th jubilee, then the day hours during which Jacob travelled must occur in the same 24-hour period (same day) as the evening hours.[103] The only way to avoid the conclusion that the day began in the morning is if šarq in this text is not a 24-hour day, or if Jacob travelled on the *last day* of the seventh year of the first week and the evening mentioned was the first day of the first month of the first year, even the first hours of that day.

The text is ambiguous. Even though the problem just mentioned must be considered, the context does imply that it is the *arrival* time after sunset which is the first day of the first month and *not* the travel time. It must be admitted that what looked at first like an *explicit* reference to the day beginning in the evening is not nearly as certain as was at first expected.

iii. Jub 32:1-34

The traditions in this section of the book are very complex.[104] A unique feature is readily noticed in this chapter which is not seen elsewhere in Jubilees - days are presented with the additional referent

"morning" or "evening". It is possible that an examination of this interesting phenomena might present a clue to the understanding of the beginning of the technical 24-hour day in at least these Jubilees traditions, if not for the entire book.

The setting of this narrative tradition centres on the person of Levi. The opening verse narrates a dream in which he is named priest of the Most High forever, but the date of the dream in months and days is not given. The only information which the reader receives is that it occurred at night (Jub 32:1). In the previous chapter (31) where the Levi story begins[105] no information is given which might make precise the date for the beginning of the dream tradition.[106] However, in the following verse (Jub 32:2) Levi's father Jacob arises ሀፃኑ ለ (*very* early in the morning). This is the 14th of the month. He awakens to present a tithe of all that came with him to Bethel. There are two possible interpretations. First, if the 14th began at sunset, then both the dream of Levi and the early morning tithe presentation took place on the 14th which would not end until the following sunset. A second possibility could be that the term ሀፃኑ ለ *began* the 14th day and the dream then occurred on the 13th day which ended in the morning hours.

Is there any evidence for supposing that ሀፃኑ ለ is a technical term for "the beginning of the day"? In Jub 49:10-12 where the divisions of the day are given this expression is not used.[107] The entire chapter (32) has fortunately been preserved in Latin where ሀፃኑ ለ is rendered by *diluculo* "very early in the morning" (i.e. daybreak or dawn). The most likely Hebrew words behind *diluculo* are either שחר or בקר both of which have the sense "early morning".[108] While these words שחר, בקר, ሀፃኑ ለ and *diluculo* all refer to the commencement of daylight, there is no clue

in any of the uses of the words that they begin a 24-hour day in a technical sense.

At Jub 32:14 seven days of sacrifice begin from the 15th to the 21st day. The 21st day may provide a clue to the confusing question of the beginning of the day. Verse 16 reads, "and on the *next* night, that is the 22nd day of this month". The logical question is: does this night of the 22nd follow the day of the 21st which would imply that the 22nd began in the evening, or when the text says the next night, have the daylight hours of the 22nd already passed implying a beginning of the 24-hour day in the morning? Even though the question is logical and needs to be asked, this sort of problem, which occurs in the Bible itself, seems to have no answer to it.

With Jub 32:16 the situation becomes problematic on a textual level. The MSS (except MS A) read, ወበሌሊት፡ ካልእት፡ እመ፡ ዕሠራ፡ ወሰኑይ፡ መዋዕለ፡ ዝወርኅ፡ "And on the second (ካልእት) night on the 22nd of this month". MS A raises two problems. It reads, ወበውእቱ፡ መዋዕለ፡ እመ፡ ዐሠር፡ ወሱኑይ፡ መዋዕል፡ ዘወርኅ "And on *this* day, the *12th* day of this month".[109] MS A has given us an incorrect number (12th instead of 22nd).[110] Regrettably the Latin is missing between Jub 32:9 and Jub 32:18. There are no Greek or Hebrew parallels.

Since the 12th day of MS A cannot occur after the 21st day chronologically and the seventh month is still implied, MS A can be assumed to be wrong and the 22nd day of the MSS can be accepted. If the number 12 in MS A is emended to agree with the other MSS there is still an important problem in MS A with the phrase ወበውእቱ፡ መዋዕለ፡ ("and on this day"). Is this an interpretation of ካልእት in an attempt to clarify the meaning of the word which could have been misinterpreted

as the two nights following the daylight hours of the 21st and thus an indication of a day beginning in the morning?[111] The interpretation of MS A must refer to the night hours of the 22nd which precede the day hours of the 21st. This can be demonstrated graphically (see Figure 7). The Julian calendar which has the day begin at midnight will be used as a focal point by which the systems of MS A and the others may be viewed.

Figure 7

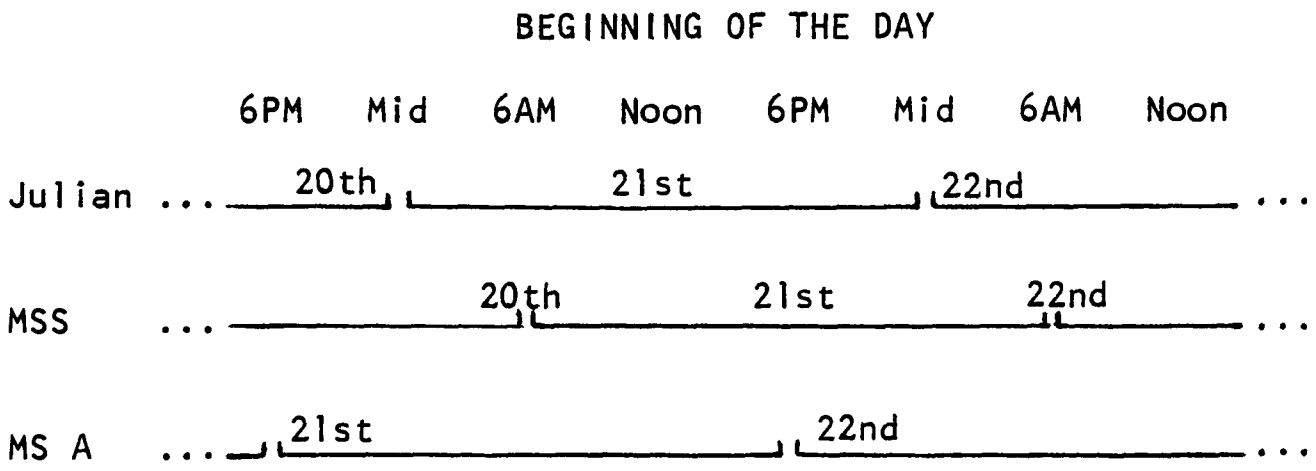

Figure 7 demonstrates how different hours of the day can be different days in systems which commence the day (24-hour period) at divergent points. Notice that all three systems have day 21 from 6AM to 6PM. However, in the MSS, night 21 follows day 21 as the 24-hour day begins in the morning, but in MS A day 21 follows night 21 as the 24-hour day begins in the evening. This can be seen as a rejection by the MSS (excluding MS A) of a day beginning in the evening and a preference for one which begins in the morning.

A similar MSS difference can be found at Jub 32:27ff.[112] In the *night* the Lord appears to Jacob and blesses him. It is clearly the

22nd which is the eighth day of the feast, a day which is called "Addition" (Jub 32:27) for it was added to the existing days of the feast (Jub 32:28). Here the day of the 22nd precedes the night of the 22nd followed by the night of the 23rd (Jub 32:30). Once again, the word "day" has a double meaning; 24-hour period, and the daylight hours.[113] Zeitlin, in an attempt to explain how the day begins at sunrise, says that, if day follows night, the night when Jacob has the vision is already the holiday.[114]

This seems to be the case. It is not evident from this, however, that the dawn begins the day in the sense of a 24-hour day. Jacob observed the 21st day until evening (6PM?), dreamt on the night of the 22nd (after 6PM) and observed the daylight hours of the 22nd *after* the night of the 22nd.[115] Zeitlin[116] felt that the Latin of Jub 32:30 clarified the meaning of the ambiguous Ethiopic. The Latin reads: *Et vigensimo die mensis huius in nocte tertia mortua est Deborra....* Charles[117] emended this to read as *Et vigensimo tertio...*, which he translated "On the twenty-third of this month at night, Deborah, Rebecca's nurse died." This to Zeitlin was proof that night follows the day and therefore the day (24-hour) begins in the morning. I fail to see how this rendering proves that the day has preceded the night. Zeitlin's point is not to be accepted.

iv. Jub 49:1-23

Chapter 49, extremely dependent upon the Exodus parallels, presents the regulations for the proper observance of the Passover meal. There are, however, both additions to[118] and deletions from[119] the biblical Passover account, which suggest a complex tradition history.[120]

Segal has divided the chapter into two parts, haggadic (Jub 49:2-6) and halakhic (Jub 49:1,7-15),[121] but his curiosity is particularly aroused by the presentation of two Exodus accounts, in chapters 48 and 49.[122] In chapter 48 the Passover is completely ignored, while in chapter 49 a very developed tradition is presented. Segal, following the traditional dating for the book, just before 105 B.C.,[123] suggests that chapter 49 reflects the religious observance of the Passover in the latter half of the second century B.C.[124]

The supposed Jubilees calendar is absent from chapter 49, and this is seen by Segal as a reason why the chapter is from a different hand.[125] To say that the calendar is missing is not quite correct, as both month and day are mentioned. At least four chapters in Jubilees mention only month and day.[126] Two chapters mention the jubilee system but give no chronological notation,[127] and at least five chapters have no calendar reference, no jubilee reference and no chronological notation.[128] It is therefore incorrect to surmise that the lack of calendrical references in chapter 49 can be used as a proof for separate authorship,[129] unless the same is true of the other chapters mentioned.[130]

The suggestion made by Segal that the lack of any attempt to insert the Passover into the jubilee (solar?) system arises from the notion that the Passover, the pivot on which the orthodox Jewish calendar turned, is based on a luni-solar year.[131] This appended chapter (49), is a reminder of the innovative and artificial nature of the Jubilees calendar - it is unable, because it is not luni-solar in nature, to admit the most important and perhaps the most ancient Jewish festival.[132]

Why then was Passover included in chapter 49? Did someone add it as a concession to potential members of the Jubilees sect (sic!)

who wished to remain attached to orthodox ritual? Or rather is it related to the Pesaḥ as an annual census, rejection of which would certainly cause exclusion from the Jewish community? Segal accepts the latter.[133]

It is possible that this chapter was added to authenticate Jubilees by adding a most essential ingredient - the Passover - to a book which had originally ignored the festival. The omission of Passover would appear as a glaring error to a Jewish reader, an error which needed correcting.

An ideal opportunity to include a celebration at the time of Passover and to put it back to the time of the patriarchs, but which was not used by the Jubilees author, was the sacrifice of Isaac (Jub 17:5;18:1-19).[134] This was in fact the style of the Jubilees author regarding the other festivals. This event had occurred at the appropriate time in month I. It would have been easy to use the pattern of the other main festivals, saying that it was instituted in heaven and observed there from Creation. There even was a type of "passing over" as a ram is sacrificed instead of Isaac. Yet, surprisingly, up to and including chapter 48, Passover is ignored. Could it possibly be that in the fast-moving narrative style of the author, in the excitement of retelling the event, the author of chapter 48 *forgot* the Passover and had to return to it with an additional chapter? This is most unlikely. To ignore the Passover, as in chapter 48, can only mean a conscious, deliberate omission. There can be no doubt that the author knew of Passover which is perhaps the most important Jewish festival.

It will be necessary to deal with chapter 49 and the Passover in some detail as all the calendrical systems proposed for Jubilees by

the various scholars are dependent upon the Passover mentioned in this chapter. This is also a key chapter in the debate about the beginning of the day which is central to the present discussion and is the reason why we are examining the chapter in detail.

At present, no Hebrew or Greek fragments preserving portions of this chapter have been located, but along with the five main Ethiopic MSS, we have a partial Latin text (Jub 49:7-22). Charles' Ethiopic text will be reproduced for six of the most relevant verses: 1-2b, 10-12, and 19.

1. ተዘከር፡ ትእዛዘ፡ ዘአዘዘከ፡ እግዚአብሔር፡ በእንተ፡ ፋሲካ፡ ከመ፡ ትግበሮ፡ በጊዜሁ፡ አመ፡
ዐሡሩ፡ ወረቡዑ፡ ለወርኅ፡ ቀዳማዊ፡ ከመ፡ ትጥብኖ፡ ዘእንበለ፡ ይምሰይ፡ ወከመ፡ ይብልዕዎ፡
በሌሊት፡ አመ፡ ምሴት፡ ዘዐሡር፡ ወሐሙስ፡ እምጊዜ፡ ዕርበተ፡ ፀሓይ፡፡ 2a እስመ፡ በዛቲ፡
ሌሊት፡ ቀዳሜ፡ በዓል፡ ይእቲ፡

10 ከመ፡ ይኩኑ፡ ውሉደ፡ እስራኤል፡ እለ፡ ይመጽኡ፡ ወይገብሩ፡ ጰስከ፡ በዕለተ፡ ጊዜሁ፡ አመ፡ ዐሡሩ፡
ወረቡዑ፡ ለወርኅ፡ ቀዳማዊ፡ በማእከለ፡ ምስያታት፡ እም ሣልስታ፡ ለዕለት፡ እስከ፡ ሣልስታ፡
ለ ሌሊት፡ እስመ፡ ክልኤ፡ መክፈልታ፡ ለዕለት፡ ተውህበ፡ ለብርሃን፡ ወሣልስታ፡ ለምሴት፡፡
11 ዝውእቶ፡ ዘአዘዘከ፡ እግዚአብሔር፡ ከመ፡ ትግበሮ፡ በ ማእከለ፡ ምሴት፡፡ 12 ወአይከውን፡ ጠቢ
ሶተ፡ በዙሉ፡ ጊዜ፡ ብርሃን፡ ዘእንበለ፡ በ ጊዜ፡ ወሰነ፡ ምሴት፡ ወይብልዕዎ፡ በጊዜ፡ ምስየት፡
እስከ፡ ሣልስተ፡ ሌሊት፡

19 ወይጥብሑ፡ ጰስከ፡ ምሴተ፡ እንዘ፡ የዐርብ፡ ፀሐይ፡ በሣልስታ፡ ለዕለት፡፡

The translation is as follows:

1. Remember the commandment which the Lord commanded you concerning Passover, that you should celebrate it in its season on the 14th of month I and you should sacrifice it before it is evening and that they should eat it in the night from twilight, that is the 15th, from the moment the sun sets.

2a. Because on this night, the beginning of that feast....

10. Let the children of Israel come and observe the Passover on the day of its fixed time, on I/14, between the evenings (በማኅከለ፡ ምስያታት፡)

from the third part of the day until the third part of the night. Two parts of the day are given to the light and the third part to the evening.

11. This is the commandment of the Lord---that you celebrate it between the evenings.

12a. And you cannot slay it during any light period, but at the moment bordering on evening (በጊዜ፡ ወሰነ፡ ሞሴት፡), and let them eat it at the time of the evening until the third part of the night....

19b. And they will slay the Passover (at) twilight when the sun has set in the third part of the day.

Jub 49:1c, which has been translated above as "and that they would eat it in the night from twilight, that is the 15th, from the moment the sun sets", suggests that the evening of the 15th follows immediately after the conclusion of the daylight hours of the 14th.

Zeitlin has challenged this suggestion.[135] He suggests that the Hebrew behind "they should eat it by night on the evening of the fifteenth" is בלילה בערב חמישה עשר where בערב must mean "the eve before." Zeitlin concludes that Passover should be eaten by night the evening before the 15th - i.e., I/14. "We must conclude that the day begins with the dawn and that the night of the fourteenth was before the fifteenth day."[136]

The Ethiopic is very clear: በሌሊት፡ እመ፡ ሞሴት፡ ዘዐሠር፡ ወሐሙስ፡ "In the night from twilight, that is the 15th," which begins እሞጊዜ፡ ዕርበተ፡ ፀሓይ፡ "the moment the sun sets." The 15th begins not at dawn as Zeitlin has supposed, but at dusk as Charles has concluded.

This phrase (which was ignored by both Zeitlin and Baumgarten) እመጊዜ፡ዕርበተ፡ፀሓይ፡ (מבא השמש) clearly suggests that two days are intended. On the 14th, before sunset, the Passover victim is slaughtered. But it must be slain between the time when the sun begins to set and when it has finally sunk below the horizon - however difficult this period may be to determine - for after sunset the day is no longer the 14th but the 15th.[137]

Segal, following Charles,[138] divided the day into three parts, two parts light (6AM-10AM; 10AM-2PM) and one part given to the night (2PM-6PM). He is interpreting the 'light' in verse 12 as any time before 1PM while Testuz regards the light as any part of daylight. For Testuz, the period bordering on the evening is sunset (a relatively brief period of time), while Segal sees the period bordering on the evening as a four-hour period, called the third part of the day, which is given to the evening. Testuz's interpretation of the period is based on the Hebrew בין הערבים which can only be an inexact period.[139] Segal's period is based on exact calculations of four-hour divisions.[140]

At this point in the discussion, Testuz is reacting against the idea that the week might begin on a day other than Sunday. If I/14 is a שבת, then the law of the Sabbath for sacrificial slaughtering must be upheld (Jub 50:14). The killing can occur only after the 14th has ended, and Testuz is forced to view the slaughtering as occurring late, as late as 7PM, to avoid any possibility of violating the Sabbath which ends at 6PM. His interpretation cannot view the third part of the day as 2PM-6PM, but rather must view it as the period after sunset before the stars appear in the night sky. This interpretation seems correct.

In this chapter (49) considerable detail has gone into

presenting as accurate a calendar as possible.

Here, there is a very pronounced attempt to clarify the Passover observance. In verses 1a, 2-5, 7-8, 15, and 22-23 we find an emphatic insistence that Israel keep the Passover as an eternal festival at the appropriate time of the year. The author is attempting to give Passover and Mazzot (Jub 49:22) its rightful place within a system of jubilees in which these festivals have been ignored entirely. The chapter is like an appendix. The closeness of these verses to the Passover regulations in Deuteronomy 16 suggests that the author was a strict Jew, possibly a Pharisee.

The author continues to clarify the Passover by declaring that it is to be observed in the sanctuary of the Lord. While on the surface Jub 49:19 is a prediction by Moses of the Solomonic temple, it is possible to view it in its historical context as an eschatological reference to a future temple and the proper presentation of sacrifice which will be expected there. If this is a reference to the historical situation of the author, then it suggests that sacrifices were being offered in cities other than Jerusalem, a situation which a Pharisee would find disturbing.

In Deuteronomy 16:6 the injunction to slay the Passover sacrifice as בערב כבוא השמש which we find in Jub 49:19 as "in the evening at sunset, at the third part of the day,"[141] is made more precise in Jubilees in an attempt to clarify the exact timing of the Passover events.

In verses 6 and 9-14 precise times are given to the day, which have encouraged much speculation about the beginning of the day and the proper day for Passover in Jubilees. In verses 10-12 the interpretation is very precise, carefully explaining the exact divisions of the day. These divisions, three parts day and three parts night, are an attempt to deal with the difficult expression בין הערבים. Verse 10b becomes very

precise, "for two parts of the day are given to the light, and a third part to the evening." This explanatory note would not be necessary unless there had been some confusion with these divisions.

It is difficult to determine the duration of these divisions in hours. As there is no indication that they might be unequal, they have traditionally been divided into four-hour units. It is difficult to follow the interpretation of Krüger[142] followed by Charles[143] that the third part of the day, given to the evening, begins at 2PM. The only explanation I can offer for their suggestion is that from 6AM to 10AM the sun seems to rise in the sky, while from 10AM to 2PM it moves across the heavens, neither rising nor falling. From 2PM-6PM, it begins its descent. The period bordering on evening would be this descent period, more than enough time to kill, roast and prepare a meal which was to be eaten at the time of the evening to the third part of the night.

The tradition of drinking of wine with the meal (Jub 49:6) has been considered as the earliest example of this in Jewish literature. It is possible, however, that this verse (Jub 49:6) and the command not to crush the bones of the victim are post-Christian but the position cannot be proved, and should not be assumed.[144]

The day in this chapter began *in the evening* as in the luni-solar Jewish calendar of the time.

The evidence in Jubilees concerning the beginning of the day, while not conclusive, is strongly in favour of an evening beginning. This is most unusual in a calendar which has been called solar. Yet, one must remember that the 364-day calendar is not solar but is rather symmetrical, or perhaps a more accurate term would be *sabbatical*.[145]

f. The Festivals

It is well known that in the 364-day Sabbatical calendar the festivals fall on the same day each year. The importance of these dates is enhanced by what happens on them, for in Jubilees they are not merely festivals but they have a particular purpose in the total plan of the book. When Israel sins, they are led into following the wrong calendar. Only by total allegiance to God and his true 364-day calendar does Israel have any hope (Jub 6:32ff).

An examination of the festivals in Jubilees will show considerable development from the use of these festivals when compared with the usage found in the biblical text.

i. Feast of Weeks

Jub 1:1 begins on III/16, the day after the Feast of Weeks.[146] In Jubilees, the Feast of Weeks is so prominent that it surprisingly surpasses Passover in importance. It is also called the Feast of First Fruits or the Feast of the Barley Harvest and falls on III/15 = III/šarq.

Jaubert has examined all of the references to III/15 in her monograph on covenant.[147] Accepting that III/šarq is III/15, she states that all the covenants or promises of covenants made to Noah, Abraham, Isaac, Jacob and Moses fall on the Feast of Weeks.[148] The only two references to covenants made without dates are Jub 9:14 (Noah's sons dividing the land) and Jub 36:7 (Jacob and Esau); but these have no relationship with the III/15 covenant, which is a covenant of renewal.[149] These are שבועות (oaths), not שבועות (weeks),[150] and so are not renewal oaths made on the Feast of Weeks which are dated to III/15.[151] The Ethiopic translator had no difficulty using መሐላ: and was not confused here by ሱባዔ: .

Zeitlin has proposed that שבוע and שבועה were confused by the Ethiopic translator and the mistake has confounded the issue in Jubilees.[15] This is difficult to account for as in the Greek stage where the words for "week" and "oath" (σάββατον, ὅρκος) are not cognate, no confusion would occur as seems to have happened in the Hebrew.

There is no difficulty at either Jub 9:14 or Jub 36:7 where oaths are recorded. They are certainly oaths, but not of the same type as the ones dated on III/15. In these texts there is no covenant renewal ceremony, and the pact made is between angered brothers.

The covenant between Jacob and Laban (Jub 29:7) is of a similar type to the one just mentioned but the date of the covenant between them is clearly III/15. There are, however, distinct differences between the covenant renewal feast and this one at Jub 29:7ff. Here the feast is made for Laban and not as a sacrifice to God.[153] The format at Jub 29:7ff is similar to the human pacts made with the brothers at Jub 9:14 and Jub 36:7. It is difficult to understand why the author placed this feast on III/15 when it seems to have no relationship to a Feast of Weeks ceremony, and when dates for the Feast of Weeks are not as clear as one might have expected.

There is, however, a semantic similarity in these three texts. In all three the word used for "oath" is መሐላ፡. In his lexicon, Dillmann[154] cites no instances where ሰብዐ has the meaning "oaths". However, in Jubilees በዓላ፡ዘሰብዓ፡ (חג השבועות) is an oath/covenant-renewal ceremony. Davenport[155] has suggested that the Jubilees author saw the festival name as a pun on weeks/oaths, and the author was suggesting a return to a non-agricultural calendar. But this distinction is not present in the Ethiopic but is only evident in the original Hebrew. For the author of the original Hebrew text of Jubilees the festival was both

covenant-renewal and Feast of Weeks. The injunction in Jub 6:17 to celebrate this covenant event by a renewal ceremony every year was broken until the time of Moses. Moses' celebration "on this mountain" was the renewal of this Feast of Weeks covenant (Jub 6:19; 1:1ff).

Abraham's renewal ceremony occurs in the middle of the month (Jub 14:20) and again in the middle of the month the following year (Jub 15:1). In Jub 14:1 Abraham celebrates the festival and an extended covenant is given to him. Circumcision is given as the sign of this renewed covenant (ኪዳን), a covenant which is first put into practice with Isaac who, not unexpectedly, is born on III/15!

If it is accepted that the Feast of Weeks falls on III/15, an even greater problem arises, i.e., the relationship between III/15 and Passover. Charles[156] following Epstein[157] interprets III/15 as a Sunday. It should be noted that III/15 is a Sunday in the calendars of Jaubert, Morgenstern and the one suggested as a possible original Jubilees calendar (Figure 5). There is, however, a difference in the way this day has been determined as Sunday by the different writers. In the calendars of Jaubert and Morgenstern, the fact that III/15 is a Sunday, along with the fact that the day before III/15 was Omer day and also a Sunday, was a key to the understanding of their calendrical systems. This use of the 50 days in calendars with 30, 30, 31-day or 31, 30, 30-day months forces the Omer day to fall on I/26 (Jaubert) or I/27 (Morgenstern).

The difficulty with this interpretation is that no Omer day is expounded or even implicitly mentioned in Jubilees and *thus no relationship exists between Passover and the Feast of Weeks in this book.* The significance of this is that the suggestions and calculations of Jaubert and Morgenstern can only be hypotheses.

If, however, the ecclesiastical (13 month) calendar of Epstein is used, for which we have found additional evidence in Jubilees, the Feast of Weeks and Omer day fit the calendar without any need to force the calendar to fit both the Feast of Weeks and Omer day. In this calendar, Sundays are the first, eighth, 15th, and 22nd every month without variation, as the world began on a Sunday. If Passover is I/14 (Sabbath) and Unleavened Bread is the week of I/15 to I/21, the next day, the day after the Sabbath (Lev 23:11ff), is I/22, a Sunday. By definition this is Omer day. The Sunday which falls exactly 49 days later (seven weeks) is exactly III/15 and is the Feast of Weeks.

The significance of this discussion is not only that the calendar of Epstein most closely approximates the actual Jubilees calendar, but also that the Feast of Weeks which falls on III/15 is a unifying factor. It is alluded to in Chapter 1 of Jubilees, which we know to be a flash-back from the end of the book, and the Feast of Weeks is present in the new beginning for mankind after the flood (Jub 6:1ff). The Feast of Weeks is observed by the most significant patriarchs of the Israelite race, Abraham (Jub 14:20) and Jacob (44:1ff). On the Feast of Weeks the genealogical link between these two, Abraham and Jacob, (i.e. Isaac) is born.[158] Thus, the Feast of Weeks functions with the sense of realized eschatology. In the Noah deluge story it is a feast of deliverance which also has eschatological implications.[159] There is a new world created from chaos, for mankind is given a second chance through Noah who is a direct descendant of Adam.

In the Abrahamic covenant, the renewal is again restrictive. In the deluge all members who were not to be part of the new covenant were exterminated by drowning. According to the covenant at Jub 15:1-34,

non-covenant people have excluded themselves from participation in the Abrahamic covenant because they are uncircumcised. The true Israel was preserved in the deluge by a forceful act. This is hardly different in the observation of the rite of circumcision where the true line of Israel is preserved. This passage (Jub 15:1ff) functions also as a new beginning. The renewed covenant has once again been restricted to the true seed from Adam, to one man and his seed[160] as before.

The absoluteness of the divine element in this narrative tradition climaxes in the sacrifice of Isaac. Isaac is born on III/15 (Jub 16:13). He is the first legitimate offspring born to Abraham through a Terahid wife (Jub 12:9) after the injunction to circumcise. Since he has a Terahid mother, Isaac is called the first born son of Abraham.[161] Through Jacob, the offspring of Isaac, the covenant privilege of Abraham will pass (Jub 19:16).

The final covenant-renewal ceremony, which falls on III/15 before the ceremony, is reinstituted by Moses (see Jub 1:1; 6:19). This is the ceremony mentioned in Chapter 44 and occurs within the milieu of the Joseph story. Jacob is fearful of going down to Egypt to greet his son Joseph, who he thinks has died many years before. The story of the sale of Joseph by his brothers has occurred much earlier in the narrative (Jub 34:10-15) on VII/10. This date and its significance for the author of Jubilees will be considered below.

Thus the narrative is structured quite differently in Jubilees. The events of Jub 34:1 to Jub 38:15 are traditions which are unknown to the authors of Genesis. The author of Jubilees has often added material from other traditions and often the author of Jubilees has ignored Genesis traditions which did not fit his purposes (see Gen 36:1-30). For example,

the story of Judah and Tamar (Gen 38) is reorganized by the author of Jubilees so that it occurs between the events of the seven years of plenty (Gen 41:49 and Jub 40:30) and the famine years (Gen 41:50 and Jub 42:1). The literary device of *Wiederaufnahme* (resumptive repetition) which is present in Gen 37:36 and Gen 39:1,[162] shows that the digression was intended and now the previous narrative is to be resumed.[163]

As would be expected, because the narrative is continuous in Jubilees between Gen 37:36 and Gen 39:1, the repetitive element is not repeated (Jub 39:2).

This technique, while ignored in Jub 39:2, is not used at the place where the Judah-Tamar story is inserted, instead the story has a continuous structure. Continuity is provided by the chronology. In Jub 40:12, Joseph is 30 years old and the year is 2162 A.M. Thus the seven plenteous years extend from 2162 A.M. to 2169 A.M. The Judah-Tamar story happens in 2165 A.M. (Jub 41:1) in the *middle* of the plenteous years. In Gen 38, the story occurs some years earlier, when Joseph is first taken to Egypt.

The story in Jubilees does not stand at the beginning of the Joseph story in Egypt as it does in Genesis. This can only be a purposeful change.

The problem of Israelite blood purity is of central importance in the Old Testament. Marriage with foreigners is not encouraged[164] especially with Canaanites.[165] Israel is to be a separate people[166] which suggests a pure blood line. This theme is most clear in Jubilees at 30:7-17. One who marries a foreigner will surely die (Jub 30:9). Defiling the seed of Israel by marrying a foreigner (Jub 30:9) is to defile the sanctuary of the Lord[167] and to profane His name causing the entire nation to be judged for this act.

This then is the reason why the Tamar incident is recorded in Genesis and Jubilees. In Jubilees, the question of birth order doesn't arise as it does in Genesis,[168] but a purpose for the event is given. Judah's seed is established for a second generation, and is not rooted out (Jub 41:27). The importance of a pure blood line stemming from Judah is necessary and so he is forgiven for his act of ignorance (Jub 41:25), even though it was a necessary act.

In Jub 34:20 it is recorded that the wife of Judah is a Canaanite. This union would produce offspring which would defile the seed of Israel. And so the Judah-Tamar incident is sanctioned, as it will produce desirable offspring because Tamar, as an Aramean,[169] is more acceptable than the Canaanite wife of Jacob.

Thus the offspring of the impure union of Judah with the Canaanite woman are not permitted to pollute the Israelite line by producing children through Tamar. One by one they are eliminated and Judah has a second generation produced through his union with his daughter-in-law (Jub 41:27).

The act of incest is condemned (Jub 41:23-26) but Judah and Tamar are not punished because of the repentance of Judah (Jub 41:23).

The central question must be why this narrative of Judah and Tamar has been re-ordered by the Jubilees author. There is the possibility that Jubilees used a variant *Vorlage*,[170] but as there is no evidence for this it seems more likely that there is a literary purpose underlying the arrangement. Goldin has considered the possibility that it is placed here to suggest that if Judah was forgiven for this sexual sin he should be forgiven for the sale of Joseph, who had had his dreams of high station fulfilled.[171] There are reasons for doubting this suggestion. The text of the incident related to the sale of Joseph does not single out Judah

from the other sons of Jacob for special consideration. They are all involved equally (Jub 34:12). The verses in Gen 37:26-27 showing that the sale of Joseph as the idea of Judah are not found in Jubilees.

A second challenge to this is that such an interpretation is not implied by the text. The only references to the Joseph story are those implied by the dating of the Judah-Tamar incident (Jub 41:1) and by the birth of the sons of Tamar at the conclusion of the years of plenty. This link between the two events, the birth of the twins and the conclusion of the seven plenteous years is made by the author (Jub 41:21-22). Here, the seven fruitful years in the dream of the Pharaoh and the act of incest are directly linked. The dream interpretation functions on two levels; on the one hand the dream is economic, on the other it is related to preserving the purest possible Israelite offspring.

Thus, the Judah-Tamar incident is of extreme importance for the author of Jubilees, because it is directly related to his concern about avoidance of foreign wives and their polluted offspring.

Shortly afterward, the father of Israel makes a celebration of the Feast of First Fruits on III/15 before he enters Egypt. There is no indication in the Genesis account that this event occurs on III/15. Perhaps this was implied because of the sacrifices offered at באר שבע which could be related to either שבוע or שבועה. The Ethiopic has translated the Hebrew with ሰባዕ: (Jub 44:1) but this is no less than we would have expected. The promise of God to make Israel a great nation (Gen 46:3) is preserved in Jub 44:5. Jaubert has seen this as a renewal covenant made on the Feast of Weeks,[172] and it must be considered as such. It is a First Fruits festival and, while the date at Jub 44:5 is III/16, the use of the conjunction-preposition ወከሠ clearly supports a change of

day from III/15. The festival in Jub 44:5 is on III/15 even though the promise of nationhood is on the following day. The covenant is unconditional and, unlike those with Noah and Abraham, no sign is given.

This brings us to the fifth and final covenant on III/15 in Jubilees which is related to the covenant-renewal ceremony. One can hardly be unaware of the situation that the entire narrative of Jubilees is set within the 40 days following III/15. Moses begins detailing the history after that date and finishes 40 days later. On the Sinai mountain Moses renews the covenant that had been kept by his predecessors but which his immediate relatives and friends had forgotten in recent years (Jub 6:19). In the opening lines after the prologue, Moses is requested by God to come up onto the mountain to obtain the two tablets of the law and the commandment (Jub 1:1), which he does on III/16. Thus, it can be concluded that on III/15 the covenant-renewal ceremony was celebrated. On the next day as in Jub 44:5, the details of the covenant are outlined. While in Jub 44:5 the promise was of nationhood, for Moses the covenant includes Sabbath regulations (Jub 50: 1-13), preceded by Passover regulations (Jub 49:1-23) and a promise that if the commandments are kept God will build His sanctuary in their midst (Jub 1:17) and they will be God's children (Jub 1:24-25). For the author of Jubilees this is not an other-worldly promise but one that can be realized now. All of Israel have the potential for becoming the seed of God. Each one who turns to Him, He will circumcise their heart (Jub 1:23), creating a holy spirit within them.

The sign for determining the true Israel has shifted throughout the narrative. The sign signifying the covenant of Noah was transcendent, i.e. a heavenly rainbow (Jub 6:15-16). The sign signifying the covenant of Abraham was represented by a physical (bodily) mutilation, i.e. circumcision (Jub 15:11). Now membership within this special group could be determined visually by this physical mutilation. The final sign is not like this physical

one but is, rather, internal, i.e. circumcision of the heart.[173] Naturally, this is not an actual circumcision, just as the Old Testament allusion in Jeremiah 31:31-34 where the law is written on the hearts of the people is not in any way literal.[174] Thus, the sign has shifted from one completely outside of man, to one on his person, to one that is both spiritual and unobservable. This idea from a much later time (i.e. Jeremiah) has been placed back to the time of the Sinai event by the Jubilees author.

The Feast of Weeks on III/15 is a most significant day in Jubilees. Celebrated in heaven from Creation to Noah (Jub 6:18), it is observed by the pure blood line of Israelites and is commanded by God for all Israelites who intend to keep the covenant (Jub 6:20).

ii. Feast of Tabernacles

As with the Feast of Weeks (Jub 6:17) this feast is ordained on heavenly tablets for eternity (Jub 16:28-30).[175] This feast also has connections with באר שבע as it is at this place that the festival is first introduced by Abraham (Jub 16:16-31). The Well of the Oath is a very important place in Jubilees as indeed it is in Genesis.[176]

The occasion of the festival is an expression of joy at the birth of the unexpected but promised son, Isaac (Jub 16:1), and the promise that in the seed of Isaac the holy nation would arise (Jub 16:18). The promise is unusual and reads as follows:

> And all his children's (sons) seed shall be the Gentiles, and they will be numbered amongst the Gentiles, and from the sons of Isaac one shall be a holy seed and will not be numbered amongst the Gentiles. (Jub 16:17)[177]

The festival is a festival of joy (Jub 16:20). The joy is for the branch of the genealogy of Isaac that will be a holy seed (ዘርኡ፡ቅዱስ፡), a kingdom (መንግሥት፡),[178] a priesthood (ክህነት፡)[179] and a holy nation (ሕዝብ፡ቅዱስ፡). It is *one* of the seed of Isaac who will be holy. This verse

is significant for the views of the author of Jubilees on election. In Jub 16:26 the motif "plant of righteousness"[180] is used in reference to this holy seed.

The idea of the people of God as His plant is known in the Old Testament.[181] In a recent study of the metaphor "plant" in the Intertestamental Literature, Shozo Fujita[182] has examined references to Israel as the plant. In both Jubilees and 1 Enoch he has concluded that not all Israel is included in the plant, but only the righteous. In Jubilees the plant sprouts from the loins of Abraham and the suggestion is made that it shall "become like Him who created all things" (Jub 16:26).[183]

While this theme is unknown in the thought of the Jewish literature contemporary with Jubilees and 1 Enoch,[184] it is consistent with the theology of Jubilees. If the interpretation of the sanctuary as the heart/body of the holy seed as argued above[185] is accepted, then Jub 1:17 is in line with this position.

Jub 23:27 can be interpreted in a similar fashion:

> And the days will begin to multiply
> And to increase amongst the children of men
> Till their days draw nigh to a thousand years...

Charles[186] comments on this verse that in the Messianic Kingdom men will attain to the age which God originally intended for them which is 1,000 years. He continues by suggesting that Adam did not attain to 1,000 years because of his sin. In the Genesis account of the flood we find that 'not dying' is linked with becoming like a god (Gen 3:4). It is interesting to note from Jub 4:30 that Adam was exactly 70 years away from 1,000 when he died, or 70 years away from the expected lifespan of a perfect human. In this verse (Jub 23:27), one does not know how long the world will last, but it is clear that as the Messianic Kingdom approaches, men will begin to live for a very long time. Thus, at least three texts support the idea that the true Israel, the

plant of righteousness, the house of God,[187] will become like Him for the plant truly is His.

The theme of election is closely connected to holy seed theology. Both Testuz[188] and Fujita[189] interpret the plant of righteousness as a remnant. It is clear that the descendants of Esau are "Edomites" not "Israelites" (Jub 38:13-14), clarifying the discussion of the seed of Isaac in Jub 18:16. Sanders[190] does not accept this position, but in his examination of the theme of election, Sanders has missed one of the central points made by the author of Jubilees.

In Jub 22:27; 25:3 and 33:20 Sanders interprets "the seed of Jacob" as *all* of his offspring. The key verse which Sanders refers to is Jub 22:11:

> ...and *some* of thy sons may he sanctify
> in the middle of the whole earth....

Sanders argues that the phrase "some of thy sons" does not indicate that only a portion of Jacob's sons are elect.[191] He plays the "some" of the verse 11 against the "they" of verse 12 suggesting that God has chosen all Israel, a choice which does not deny freedom of action.[192] In Jub 22:10 Abraham's prayer is that God will choose Jacob and his seed. Jacob is to exercise authority over all the seed of Seth (Jub 22:12). On the surface this appears to give support to the view of Sanders but we know that many of the offspring of Seth are not elect. It seems more likely that "they" refers not to a branching genealogy but is the totalling effect of a linear genealogy.[193] The sons of Jacob are the representatives of the holy line running from Adam to eternity. A branch of the genealogy can be cut off at any time as the sons of Esau experienced.

Sanders used the English text of Charles which is quoted above. The word "some" is Charles' rendering of እምሰ: in the phrase ወእምውሉድከ: ይቀድስ፡ በማእከለ፡ኵላ፡ምድር፡ The word ወእምውሉድከ:

is compounded with ኽምሳ: [194] and has the meaning "some, a few, several" when a number is intended.[195] ኽምኻ most often means "from" but can have other meanings such as "since" in a time reference. The context, however, will only support the meaning "some". "They" in Jub 22:12 refers to the sons who are to be righteous/faithful (ጽድቅ:) while "some" in Jub 22:11 refers to a remnant who are to be made holy/sanctified (ቅዱስ:). They will become a holy nation (ሕዝብ:ቅዱስ:). There is no good textual reason for not accepting the translation by Charles of Jub 22:11. Against Sanders it can be concluded that Jub 22:11 is intended to refer to a remnant and does not imply an all-inclusiveness concerning the offspring of Jacob.

These two statements, "some of your sons" and "they shall become a holy nation", need not be separated as Sanders has done. The offspring of Jacob, members of a pure blood line from Abraham are to be a holy nation but some within this line are to be singled out as special. Just as in the previous blessing mentioned Isaac has a "plant of righteousness" singled out from his seed which is the line of Jacob, so Jacob will have a holy line from his seed.

This is clarified in the preferential treatment given to the selection of a wife for Jacob. She needs to be particularly pure if the sons are to be a holy seed. In an unusual blessing given to Jacob by his grandfather Abraham, the selection of an ideal wife is particularly important.

> Beware my son Jacob[196] of taking
> a wife from any of the seed of the
> daughters of Canaan.
> Since all of his seed is to be
> eradicated from the earth
> Because in the sin of Ham, Canaan
> has erred

> And all his seed will be obliterated
> from the face of the earth (down to)
> every surviving member.
> And none springing from him will be
> saved on the judgment day. (Jub 22:20-21)[197]

Underlying this polemic on the Canaanites is the demand that the seed of Jacob be pure. The Canaanite wives of Esau are sexually immoral (Jub 25:1). Jacob, however, is to take a wife of the house of the father of Rebecca (Jub 25:3). Then he will be blessed and his children will be a righteous race (ትውልድ: ጻድቅ:) and a holy seed. Jacob responds to the wish of his mother not only by telling her that he has plans to marry one of his cousins who is a daughter of Laban, the brother of his mother, but that throughout his entire life he has remained sexually pure (Jub 25: 6-7).

What follows in Jub 25:12-23 is very significant. The blessing of Jacob from Gen 28:1-4 is no longer spoken by Isaac, but is put into the mouth of Rebecca, the mother of Jacob.[198] The opening claim, that Jacob is a pure son (ወልድ: ንጹሕ:) is dependent upon his avoidance of sex, as ንጹሕ: has the meaning "innocent, uncorrupted."[199] That his purity is directly related to his genealogy has already been claimed in Jub 19:16. The entire blessing is related to the seed of Jacob.

In the blessing there is another reference to the unusual situation of the sanctuary of God dwelling within this holy line at Jub 25: 21b;

> ...and in them (ወበ ውስ)[200] may
> his sanctuary be built forever.

They are to be so pure that God himself can dwell within them. Defiling Israel or the seed of Israel is punishable by death (Jub 30:8-9). Again in Jub 30:15 committing uncleanness, profaning the name of God and defiling the sanctuary of the Lord are linked. One who has defiled the

sanctuary can make no atonement (Jub 30:16) and that one is related to the Shechemites who ravished Dinah (Jub 30:17). To defile the sanctuary is to commit a sexual sin.

It is not surprising then, in a work where promise, blessing and purity are so important, that these themes are centred in the covenants. This would have been expected. The Feast of Tabernacles is no exception.

This is exactly the case in Jub 16:16-31. At the Well of the Oath the announcement is made to Abraham that Isaac would produce a holy blood line even though the majority of his sons would be Gentiles. This special seed would be the plant of righteousness arising for eternal generations. The festival is celebrated at the sacrifice of Isaac event in Jub 18:18 where the promise is reconfirmed by the protection of God who does not permit his previous word to be mocked. The blessing on Abraham and his seed is sure (Jub 18:15-16).

The final Feast of Tabernacles celebration in Jub 32 is recorded in a similar way. Offerings are made (Jub 32:4-6), the festival lasts seven days (verse 6), and the promise of multiplied seed is made (Jub 32: 18-19). There is one significant difference in the form of the celebration here; the descent and ascension of the Lord. He speaks directly to Jacob while in the other instances the Angels, who are presenting the discourse in Jubilees, speak for the Lord. Jacob is indeed a significant person in the Jubilees narrative.[201]

If the Feast of Weeks can be stated as a ceremony of covenant-renewal, the Feast of Tabernacles is a ceremony celebrating the holy seed. The two festivals are undeniably linked as these are major themes in Jubilees. These festivals were special times, on special days, at special places. Because these men were faithful to the calendrical

festivals and were keeping the holy genealogy pure the blessing was theirs. The proper calendar is essential for preserving these special days and so the 364-day Jubilees calendar becomes an essential factor in the structuring of the book. There is a direct connection between Jub 6:18, which states that the Feast of Weeks was not observed from the death of Noah until Abraham, and the chronological references. The structures of calendar and chronology are directly dependent upon one another.

B. Jubilees, 1 Enoch and Qumran

Now that the diversity of the actual Jubilees calendar has been determined, it is appropriate to examine the relationships between the calendars of 1 Enoch, Qumran and Jubilees. The supposed similarity of these calendars has been used to say that both groups (the author(s) of Jubilees and the Qumranites) were opposed to the Jerusalem priesthood and consequently the nation;[202] and the calendars can be used to demonstrate that the author of Jubilees and the Qumran sectaries represented the same theological tradition. This identification of the calendars is one which has been challenged by very few scholars.[203] If it can be demonstrated that these calendars in spite of their similarities have dissimilarities, then the thesis that these pieces of literature evidence the same theological tradition will need to be supported in other ways if such a statement is to be upheld and not rejected.

a. Jubilees and 1 Enoch

A cursory glance at the calendars of 1 Enoch[204] and Jubilees might leave one with the impression that they are the same. They both

adhere to a year of 364 days, seemingly reason enough to assume that they are identical. Yet these calendars evidence some significant internal differences.[205] Two of these differences are: firstly, the 30, 30, 31-day month of 1 Enoch as opposed to Jubilees where the length of a month is never explicitly mentioned; and secondly, the length of a year in 1 Enoch is 360+4 days rather than 364. Neither Jubilees nor 1 Enoch is following the true solar year of 365.25 (approximately) days. Rather, they are following an artificial (solar?) year of 364 days which is divisible by seven,[206] and they are reacting to the use of a 354-day lunar year. In 1 Enoch and Jubilees the calendrical contexts are quite different. Jub 6:32-38 is a polemic against disturbing the festivals. They must fall on the same day every year and nothing is to be disturbed. The year is

> ...364 days, and (these) will constitute a complete year, and they will not disturb its festivals...they will not leave out any day...(Jub 6:32).

The point being made is that this 364-day calendar is divinely ordained and under no circumstances is it to be changed. To do so would be to disturb the ordered system where both festival and season has its exact same place in the year repeating year after year without any possible deviation from this ordained plan.

In 1 Enoch the calendar is not a static, unchanging 364-day system but has 360 days plus an additional four days which are to be intercalated every year (1 Enoch 82:4-6).[207] These four days are of great concern to the author of 1 Enoch, a problem which does not arise in Jubilees. These are the days where men have gone wrong in the past (1 Enoch 75:2). These days in 1 Enoch are *not* part of the year (1 Enoch 75:1). The result is that the actual year is no longer divisible by

seven as in Jubilees which is essential to the functioning of the Jubilees calendar. Most scholars agree that Jub 6:32 "And they will not leave out any day" is a reference to the lunar year which is 10 days too short (Jub 6:36). It is also possible that this is a polemic against the 360-day calendar and the problem of intercalating these extra days by which men have gone wrong in the past (1 Enoch 75:2) and which were troublesome for the 1 Enoch author as well. This would suggest that Jubilees is later than 1 Enoch and is an attempt to correct the problem raised by these four days in that treatise.[208] While the difference between the 1 Enoch and Jubilees calendars is not one of kind, there certainly is a difference in degree.

b. Jubilees and Qumran

With the discovery of the Qumran scrolls which brought to light numerous Hebrew fragments of Jubilees,[209] it was a natural step to look for similarities between the Qumran writings and Jubilees. If similarities such as similar calendars were found functioning at both Qumran and in Jubilees, then a relationship between the author(s) of Jubilees and Qumran could be considered certain.

The Jubilees fragments must be considered on two levels. First, these fragments must be examined in themselves to determine if there are any calendrical clues which might aid the calendrical discussion. These Hebrew fragments are at least 1300 years earlier than the best Ethiopic MSS. Second, the non-biblical, non-Jubilees documents from Qumran must be considered to determine the actual Qumran calendar. Then it can be compared with the Jubilees calendar. This will lead to some conclusions about the provenance of Jubilees.

i. The Jubilees Fragments from Qumran

It is a disappointing fact that of the very little Jubilees material which has been preserved, none deals specifically with the calendar. In these Hebrew fragments, however, seven numbers are preserved. These will be considered as checks against the Ethiopic MSS numbers and any relevance to to the calendar discussion will be noted.

1. 11QJub 1 = Jub 4:7-11

In line one of this fragment בְּארבְּעָה [210] agrees with all of the Ethiopic MSS which read ወበራብዕ: . Four lines further on we have the reading הרביעי which is much clearer and agrees with the MSS as MSS A and B read ራብዕ: and C and D read ራብዐ:.[211]

2. 11QJubM3 = Jub 4:16-17

The Ethiopic MSS readings of ቀዳሚ: supports the Hebrew reading ון] ריאש from line two.[212]

3. 11QJub4 = Jub 12:15-17

Line three ה] בחמש is found in all four MSS as ኀምሱ:.[213]

4. 11QJub5 = Jub 12:28-29

All MSS read ሳብዕ: supporting עה] בשב of line one.[214]

5. 1QJub17 = Jub 27:19-20 (21)

The numeral באחד of line one is supported not by ሐደ:but by ቀዳሚ:in the MSS. The Latin text omits the number. Milik reads the phrase שנה] באחד as a mistake.[215] VanderKam agrees with Milik.[216] We should have expected the Hebrew to read בשנת אחת but there is no room in the line for such a reconstruction. The ד

is quite clearly not a ת in Plate XVI/17, and so it seems unlikely that שנה is the following word. Milik's suggestion that אחד of line three has influenced the spelling of באחד in line one is unlikely, as אחד is two lines *below* באחד and any influence would be expected the other way. The phrase ... באחד against the Ethiopic and Latin should be translated "in the first [day]...."

The Ethiopic ቀዳማዊ: in place of ኀሠሡ: is not too unusual as cardinals and ordinals are often interchanged.

6. 2Q19 = Jub 23:7-8 (two numbers)

The number אַרְבָּעִים is correctly translated by ኀርባዕ: in line one, thus opposing the omission of the numeral in MS A.[217] This numeral is not a chronological reference as in the previous examples but refers to the forty days of weeping that accompany the death of Abraham. Line four records the total years of the life of Abraham in Jubilees: שלושה יובלים היה וא]רבעה.

Again the MSS agree reading ሠላሳ: and ኀርባዕ: . MS A reads [illegible] and ኀርባዕ: . It is a disappointing realization that the numbers in the Hebrew fragments are of little or no help in answering questions relating to the calendar.

ii. The Calendar of the Qumran Documents

A group in defiance of the Jerusalem priesthood and the calendar used there might express their contempt by deviating from the priestly Temple calendar.[218] The terms 'defiance' and 'contempt' may be too forceful. None of the calendars before the Julian calendar was adequate. According to Bickerman, they not only disagreed with one another but also diverged from both the sun and moon reckoning.[219] The duration of a

month was not fixed.[220] If this Qumran group were showing contempt for the priestly calendar, it could not be because their proposal was more accurate. It could only be for theological reasons.

Certain scholars have considered references to the sun in the Qumran material in an attempt to identify the solar nature of its calendar. Talmon also suggests that because the Qumran and Jubilees calendars are similar in other respects, by analogy the Jubilees calendar must also be solar.[221] In his monograph, VanderKam cites a substantial list of secondary literature on the Jubilees calendar and then concludes, with no detailed argumentation of his own, that "It is now well known that 1 Enoch 72-82, Jubilees, and the Qumran texts evidence *the same solar calendar* (italics mine), and for that reason there is no need to discuss it in detail here."[222] Since VanderKam has used this conclusion concerning the solar nature of the calendar and its similarity to the Qumran calendar as a means for dating Jubilees,[223] such a conclusion must be tested.

It has already been demonstrated that there is a difference in degree between the calendars of 1 Enoch and Jubilees. The question then is not whether the Qumran, Jubilees and 1 Enoch calendars are identical but rather to which of these latter two, if either, do the Qumran texts approximate. And so the arguments in favour of similar calendars for Jubilees, 1 Enoch and Qumran need to be re-examined. If it is found that the Qumran calendar is based on the artificial 364-day system, then the question raised concerning the relationship of the Qumran texts to Jubilees would be supported against its relationship to 1 Enoch (or vice versa) and the statement of VanderKam would be unfounded.

iii. Solar References in Jubilees and Qumran

Before examining the Qumran solar references, solar references in Jubilees must be considered to obtain some perspective on their use in that work. The presence or absence of references to the sun in a calendrical context will determine whether the author of Jubilees intended his artificial calendar as a representation of the true solar calendar. It is known from the document itself that the calendar is not based on the true solar year of 365.25 (approximately) days and so since intercalation is impossible the 364-day calendar would fall out of phase in a very short time. The seasons would be quite noticeably out of phase in one generation.[224] This raises the question of the practicality of the 364-day calendar which must be intercalated at some point if it is to agree with the true solar year. Since only by intercalation can a true solar year be followed, scholars have suggested possible methods of intercalating for the Jubilees calendar.[225] It will be suggested below that such theories have misinterpreted the purpose of the Jubilees calendar.

Although most of the sun references in Jubilees are only indirectly related to the calendar, on at least two occasions (Jub 2:9 and 4:21) the sun and the calendar are directly related. Jub 2:9b is parallel to Gen 1:14b:

Jub 2:9b

እመዋዕል፡ ወእሰንበታት፡ ወእኢዉራሳ፡ ወእበዓላት፡ ወእዓመታት፡
ወእሰንበታት፡ ዓመታት፡ ወእኢዮቤልዉሳት፡ ወእኵሎ፡
ጊዜ፡ እዓመታት፡

Gen 1:14b

והיו לאתת ולמועדים ולימים ושנים

In both Genesis and Jubilees the sun, moon and stars are created on the fourth day. There is a difference, however. While in Genesis the מארת control the signs, seasons, days and years, in Jubilees the θחף controls days, sabbaths, months, festivals, years, Sabbath years, jubilees and appointed times. Traditional interpretation has viewed "the sun" as the important element in this verse. What seems to be more significant is the use of the number seven in the list of items mentioned.

Day	:	364+364 = 1
Week	:	364+52 = 7
Month	:	364+13 = 28
Year	:	364x1 = 364
Sabbath-year	:	364x7 = 7 years
Jubilee	:	364x49 = 49 years

The sun is the "great sign" but it is the number seven and the 364-day year which are central.

In Jub 4:21 Enoch is shown the rule of the sun and he writes down everything. While this text suggests that a solar year is being observed as in the 1 Enoch 72-82 passage, the calendar proper is not discussed here but is explained in Chapter 6.[226] There the polemic is clear - intercalation will only be necessary if Israel is disobedient (Jub 6:33). The divinely ordained year is 364 days and neglect of festivals or observation of festivals not according to the command of God causes "the years to be dislodged" and "the seasons will be disturbed." The author of Jubilees knows that it is not a problem with the 364-day calendar that causes the seasons to shift, it is rather the apostasy of the Israelites around him. The author of Jubilees is citing polemic against both the Babylonian 365.25-day calendar (Jub 6:33) and the 354-day

lunar calendar (Jub 6:36). For him the 364-day calendar is the only possible calendrical system.[227]

It now seems expedient to examine each of the Qumran sun references.[228] In their specific contexts the mere occurrence of the word שמש cannot be considered as proof that the text is dealing with a solar system with regards to the calendar. It has been suggested[229] that the Qumran covenanters employed a calendar which differed from the luni-solar calendar used by the main body of Judaism even though the Qumran sect's mode of observance of the festivals "did not vary from the rules accepted by the official authorities."[230] The present inquiry is not concerned with the "mode of observance" of the festivals but rather with "the day of celebration." It is the day and not the mode that is related to the calendar question.[231]

Some of the solar occurrences in the Qumran texts are not calendar references.[232] An examination of the remaining references might present a clue to the possibility of a solar calendar at Qumran.

Here is presented what may be in 1QpHab xi a practical calendrical dispute.[233] The Wicked Priest pursues the Teacher of Righteousness into the wilderness on the Day of Atonement in order to cause him to stumble on this holy day. Talmon[234] assumes from this text that the Wicked Priest is using a 354-day lunar calendar in opposition to the 364-day solar calendar of the teacher. Both want the Day of Atonement to fall on VII/10 in their respective calendars in agreement with the biblical injunction at Lev 23:27. An earlier biblical text, 2 Chron 30: 1ff, could be an example of a calendrical dispute, but such disputes are not common in the pre-Qumran period. The question remains; is this a calendrical dispute in 1QpHab? H.H. Rowley[235] and A. Dupont-Sommer[236]

think not. It is a conflict in terms of persecution. Dupont-Sommer has suggested that it probably occurred in 63 B.C., the day Pompey took Jerusalem which happened on the Day of Atonement. Josephus, however, records that this event took place in month III and not month VII.[237] The historical allusion is not firm. It is, of course, possible that the Wicked Priest defiled his Day of Atonement. It seems more probable, however, that the Wicked Priest and the Teacher of Righteousness had different Days of Atonement and the Teacher was pursued on his Day.[238] This does not necessarily mean that one is using a solar and the other a luni-solar calendar. Different interpretations within the same calendrical system could account for such differences, making quite unnecessary the suggestion that the Teacher of Righteousness used a solar calendar.

In 1QS x, 1-4 scholars[239] have seen an implicit sun reference and have concluded that there is evidence here for a solar calendar. The text is so unclear that it can be ignored because of its ambiguous nature.[240]

The references to the sun at Qumran do not prove that the Qumran calendar was solar. More substantial evidence than that derived from these references must be realized before the Qumran calendar can be called solar. The tables of the Priestly Courses at Qumran may provide just such evidence. We now turn to them.

iv. The Priestly Courses

1. 2 Chronicles 24

In the Temple the priestly familes took their place of service by drawing lots (2 Chron 24:19). These priestly families were divided into 24 groups usually called משמרות הכהנים "priestly courses" and each family would serve when their turn came around.

Aaron, the first High Priest, has four sons. Two of these

sons, Nadab and Abihu, died childless (Lev 10:1ff) while his other two sons, Eleazar and Ithamar, inherited the Priestly office. In the time of David (2 Chron 24:3),[241] Zadok, a son of Eleazar, and Ahimelek, a son of Ithamar, helped David to organize the priestly families into the משמרות הכהנים for Temple service.

The number of courses has been related to the number of weeks in a year. If each family served for two weeks, then 24 courses would exactly fill a 48-week year.[242] This, however, could not relate to any sort of "calendar year" as there are not 48 weeks in a lunar year ($354 \div 7 \neq 48$); rather there are 50 weeks and four days. The 24 courses of 14 days each cannot be seen as directly related to the lunar calendar.

The 1 Chronicles text records twice as many sons of Eleazar as Ithamar, 16 as opposed to eight. The reason given is that Eleazar has more "chief men" (1 Chron 24:4). E.L. Curtis,[243] writing long before the influence of the Qumran material on this text, saw these numbers in the ratio of 2:1, the same ratio as the rights of a first-born to a single younger brother (Deut 21:17). Eleazar, Aaron's third son by birth, became the first son by inheritance when Nadab and Abihu died. These artificial numbers were selected not as representative of a lunar year but were chosen on the basis of the right of the first born.

2. Mishmarot at Qumran

In 1956 J.T. Milik published a Qumran table of משמרות הכהנים which was found in Qumran Cave 4.[244] In his monograph, translated into English in 1959,[245] he suggested that these משמרות supported the Jubilees-Essene calendar of Jaubert.[246] This roster of priestly service was based on 24 families serving 13 times in a six-year period which would coincide

exactly with the luni-solar calendar followed in daily life. It was supposed that the roster worked on a 364-day year while the Jewish community used a 354-day year and intercalated a month of 30 days every three years. Thus, 364x3=354x3+30.[247] This ecclesiastical year of 364 days, Milik suggests, was made up of 12 months of 30 days and four intercalary days, [248] a calendar identical to that found in 1 Enoch.

Here in these courses a clue is found concerning the 30-day month and the beginning of the week. On the one hand, in the priestly course called מעזיה Passover falls on its third day. If the date of Passover from Lev 23:5 which is I/14 was accepted by the Qumranites, then the course of מעזיה began two full days before on I/12. If each course began on a Sunday[249] then I/12 is a Sunday and the week (I/8 and I/1) begins on a Wednesday. On the other hand, Vogt[250] has argued for the beginning of the courses on the Sabbath even though he accepts the calendar of Jaubert which begins on a Wednesday.[251] This would mean that Passover in the course of מעזיה would fall not on Tuesday I/14 but on Monday I/13. If Vogt is right that the courses begin on the Sabbath, then I/12 would be a Sabbath, the first day of מעזיה, and the week would begin on Tuesday in agreement with the calendrical proposal of Morgenstern. Since the evidence for the question of the beginning of the week seems to be contradictory, it cannot be solved by the Priestly roster.

Even though the text of the Priestly roster is fragmentary, it is possible that 26 courses are alluded to, which has suggested that the 364-day cycle is behind its organization. These 26 Priestly courses are mentioned in the War Scroll, 1QM ii:1-2.[252]

1QM is a military document dealing with the regulations for the Sons of Light in their battle with the Sons of Darkness. It is written

in the style of apocalyptic and has generally been considered composite.[253] In the section 1QM ii-ix, the principal section dealing with the regulations for the war, a military-like conscription list is given. There are 52 heads of the fathers of the congregation, a chief priest and his deputy, 12 heads of the priests, 26 chiefs of the courses, 12 chiefs of the Levites and 12 chiefs of the tribes, one from each (1QM ii:1-3).[254]

The section 1QM ii:1-3 would only be regarded as a military document in its context within 1QM as a whole. The language is not military but is Temple language.

The question which the present inquiry is concerned with is the relation of these classes of priests to the Priestly courses and to the calendar question. While Yadin, who sees a distinct relationship between the calendar and the Priestly courses has supporters,[255] there are others who see no relationship at all. However, the important numbers for Jubilees: 52 weeks, four seasons of 13 weeks, are not present in the War Scroll. On the other hand, J. Obermann[256] has noticed that the significant items in 1QM such as "fathers of the congregation," "priestly divisions," and periods of 26 weeks cannot be seen in Jubilees. He concludes that it is highly unlikely that 1QM ii:1-3 is a reference to the calendar. However, the numbers 52 and 26 in an apocalyptic work do seem quite suggestive of a solar calendar, suggesting that a solar calendar is intended in 1QM even if a particular calendar was not implied in 2 Chronicles.

Lehmann[257] follows a similar line of argument to Obermann and suggests that the number 52 in 1QM is no more than "the head of a list."[258] The number 52 is merely the total of one High Priest, one deputy, 12 heads, 12 Levites and 26 chiefs of the courses.[259] Again, this is unconvincing.

A further point is made quite convincingly by Przybylski

concerning the number 52 in the context of the eschatological War Scroll. He concludes that the 26 priestly courses are for the future, when the 364-day calendar, which is completely symmetrical, can be put into use after this Qumran sect has control of the Temple. He suggests that one of the characteristics of apocalyptic is the solar calendar.[260]

By using a 364-day calendar, predictions of the future could be made with the precision required by a speculating apocalyptist. Intercalation of any kind would only confuse the issue. A calendar was needed which could be considered accurate and sacred and the 364-day calendar was exactly right.

By the detailed incorporation of such a calendar into the Genesis narratives, the author of Jubilees has shown convincingly that his sacred 364-day calendar was observed by the patriarchs of Israel. If the patriarchs used it, then it must be valid for future use. This polemic, as we have seen, is not in the least interested in intercalation. This apocalyptic calendar will be important in our consideration of the chronology of Jubilees.

In conclusion, while calendrical solar references are non-existent in Jubilees, and are ambiguous at Qumran, the משמרות discussion suggests that there was a solar calendar at Qumran. The reason the Qumranites used a solar calendar of 364 days, it was suggested, was related to their apocalyptic interests.

v. The Temple Scroll

The calendar question was raised once again with the recent publication of the *editio princeps* of the Temple Scroll by Yigael Yadin.[261]

In this scroll, the utopian 364-day calendar is used and festivals fall 50 days apart.[262] Scholars have viewed the relationship to Jubilees and 1 Enoch both as certain[263] and uncertain.[264] One of the main difficulties in ascertaining the true calendar of the Temple Scroll is the fragmented nature of the text.[265] This is most disappointing in view of the discussion of the Waving of the Omer, where there are possibilities for determining calendrical information, except that the Omer texts are so fragmented.

If the Temple Scroll is using what has now been called the standard Qumran calendar of 30, 30, 31-days, it seems unusual that the phrase ממחרת השבת from Lev 23:11 & 15 has been removed.[266] If the day after the Omer day is not a Sunday, but the 50th day is a Sunday (Temple Scroll xviii:13), it is certain that a 28-day month calendar is not in use and it seems likely that the 30, 30, 31-day system is functioning. Milgrom has raised the possibility that the 50-day periods of the Scroll are really meant to be 49-day periods. The festival day counts as the last (50th) day of one cycle and the first day of the next.[267] He has also suggested that ממחרת השבת was omitted as it would only tend to confuse the issue of which Sabbath was intended.[268] But if Levine is right in holding that שבת may mean "week" and not just the Sabbath day,[269] there would be no possible way to determine on what day either the Omer or the day after the seven weeks fell. It appears that the calendar of the Temple Scroll is as elusive as is the other Qumran calendrical information, and the connection between Jubilees and the Qumran calendars must remain uncertain.

C. Conclusion

Now that the Jubilees calendar has been examined in considerable detail, the following conclusions have been reached.

First, the calendar and the chronology of Jubilees are carefully bound together. The sabbatical calendar based on the number seven is used in chronological calculations based on sabbaths of years (seven years) and jubilees of 49 and not 50 years. Unlike other calendars of the period which do, in fact, use the seven day week, this calendar in Jubilees uses multiples of seven for every possible situation.

Second, the Omer waving ceremony is absent in Jubilees. It was shown that the difficult expression ממחרת השבת from Lev 23 is of no help in determining the length of a month in Jubilees, as various interpretations fit the ambiguous data.

Third, it was argued against Jaubert that the year begins on Sunday in Jubilees. A full criticism of her "liturgical days" hypothesis has recently been presented by VanderKam[270] but he does not challenge her idea of a Wednesday beginning. One would think that if the author of Jubilees believed the beginning of the week to be on Wednesday, such a divergent position would have been detailed by one so concerned with calendrical matters. But not only does he not speak of Wednesday, the only weekday he ever mentions is the Sabbath. There is no good reason to suppose that the week does not begin on Sunday in Jubilees.

This conclusion caused some scepticism to fall over other elements of Jaubert's hypothesis. One of these was her definition of ωϹΦ: as "the first day of the month." Our investigation showed that a šarq day could begin a month, could fall in the middle of a month, begins the four seasons and is clearly a technical term for "special days," and that the Hebrew behind šarq is not חדש but מזרח.

Fifth, we found that there was little consistent evidence for the length of a month. Various traditions used lengths of 28, 30 and 31

days. Against Jaubert, Morgenstern, and their followers, it was found that the tradition which was the most explicit detailed a month of 28 days. It is not insignificant that a 28-day month is exactly divisible by seven.

Sixth, the beginning of the day in Jubilees was examined. If a solar calendar was implied, one would expect the day to begin at sunrise. The evidence dictated against this and although not conclusive, the evidence tended to side with a day beginning at sunset.

Seventh, the festivals of Weeks and Tabernacles were considered. Here it was discovered that these festivals were directly linked to the author's purpose in writing the book. Many significant events in the lives of the patriarchs happened on these festivals. Observing the festivals means that the Sabbatical 364-day calendar is being followed. And when the proper calendar is followed the genealogical line and chronological dates all function perfectly in the elaborate system devised by the author.

Finally, the calendars of Jubilees, 1 Enoch and Qumran were compared. It was found that all are based on the 364-day calendar but they differ internally.

The Hebrew fragments of Jubilees were also examined but calendrical information was found to be lacking.

The Qumran calendar was seen to be very elusive.

While there certainly are some similarities between these three calendrical systems, they cannot be declared identical but should be viewed as dependent.

CHAPTER TWO

GENEALOGY IN JUBILEES

The text of Jubilees diverges from that of Genesis at many points. Unlike Genesis, Jubilees does not have separate listings of the genealogical relationships of the patriarchs as in the lists found at Gen 4:17-22; 5:1-32; 11:10-32; etc. Instead, the genealogical material in Jubilees is presented within the context of the narrative. For this reason, when the genealogical material of Jubilees is examined, one is much more conscious of the narrative within which the genealogy is located. Thus, the narrative itself will be an important consideration in the present discussion.

The genealogies in Jubilees diverge from those of Genesis in another important way. The author of Jubilees, in introducing the genealogy of the patriarchs, adds (unlike Genesis) the names of their wives and fathers-in-law. The present chapter will examine the names of the wives and the possible original Hebrew meaning of the names. The hypothesis that the names of the wives and the original Hebrew meaning of the names are directly related to the narrative in which the genealogy is located will be examined.

The impetus for this chapter came originally from a comment made by Davenport in his monograph. There he made the statement that the names of the wives and fathers-in-law were added *before* the author received his list. He continues by saying that "these names have no relevance for those concerns which occupy his (the author of Jubilees) attention. They

hardly seem relevant for his interest in the purity of Israel, for the problem of intermarriage among humans arose only after the flood."[1]

The present chapter will challenge this statement and show that the names of the wives and fathers-in-law are not merely trivia preserved from some earlier tradition but are in fact integral to the intention of the Jubilees author.

It should be noted that the statement of Davenport that the names had a pre-tradition cannot be proven. Lipscomb, in a study on the names of the wives preserved in Christian Byzantine Chronographers, states that even though the names found there are not drawn directly from Jubilees,[2] Jubilees is in fact the earliest extant source of a list of patriarchal wives. It is true that the wife of Lamech in 1QapGen is בתאנוש, the same as in Jubilees, but the argument for the priority of Jubilees should not be dismissed.[3] Even if 1QapGen was earlier than Jubilees, only one name and not a list of names need necessarily be seen as borrowed from an existing tradition. But at present, and until an earlier list is found, Jubilees is the earliest and so we can look for the author's intention in presenting the names in his narrative.

We will argue then that what is important in the discussion of the wives is the relevance of the list within Jubilees itself. In fact, whether the names were borrowed, or are original to him, they are integral to his purpose.

In the previous chapter on Calendar it was shown that numerous scholars had delved into the material formulating a variety of calendrical hypotheses for Jubilees. The same cannot be said for the genealogical material as it has remained relatively untouched. For this reason the present study will begin with an examination of the names of the wives

and the fathers-in-law of the patriarchs, an unusual and unexpected addition to the narrative tradition of the patriarchs of Genesis.

Adding the names of wives to the narrative causes a resulting change in the function of the narrative.[4] The present thesis will consider the question of how this change of form made from the Genesis material affects the function of the material in Jubilees.

A most interesting result of the fact that the author of Jubilees presents wives and fathers-in-law for the Genesis patriarchs is that we are able to separate foreign marriages from Israelite ones. We will notice in our discussion of this phenomenon that foreign wives affect the narrative and also the chronology in an unfavourable way. This important theme, which is also related to the calendar, will be detailed in full in the following chapter on Chronology. In a world dominated by men, so many references to women cannot but raise the curiosity of the reader.

A. The Names of the Wives

The significance of the names of the wives of the patriarchs in Jubilees has not gone completely unnoticed.[5] In those early studies the names were seen to have meaning but no connection was drawn between that meaning and the narrative about the person named. It is known that name etymology and narrative are related in the Old Testament.[6] The present chapter will consider the etymologies of the names of the wives in order to determine if such a relationship can be found operating in the Jubilees narrative.

At the end of the chapter, Tables showing the patriarchs and their wives are presented so the relationships between them may be seen at a glance.

If the proposition that *the names of the wives and the meaning of those names is directly related to their function within the narrative* is valid, then such a proposal will be verifiable. Such a proposal need only examine the non-biblical names, as the biblical names such as Eve, Sarah, Rachel, etc., are in no way the product of the author of Jubilees, or the personal choice of the author, but are rather a part of the biblical tradition which lay before the author. Since these women's names are part of the pure line from Adam to Noah, one could expect the names of the women to be favourable. This theme will be tested by attempting to transliterate the name back into Hebrew in the hope of discovering the intended meaning of the name.

When the name of a patriarch or his wife is discussed, I have chosen to transpose the name from Ethiopic to English script. Charles used a similar style for certain names (Jub 7:14-17) but not all.

For example, Hēnok and 'Enoḥ are both translated by Charles as Enoch. One can see from my transliteration that they are not the same person and so the transliteration, although a bit cumbersome, does keep certain names straight. Also, the alphabet syllabary used for the transliteration from Ethiopic script to English symbols is from Lambdin's *Introduction to Classical Ethiopic (Ge'ez)*.[7] The only unusual letter is *ḥarm* which uses the English alphabet symbol 'x'. The reason for following Lambdin is for ease of typing and because his grammar is becoming standard in the English-speaking world.

The discussion of the names of the wives of the patriarchs need not begin with Eve as her name is found in the biblical tradition and the relation of her name to the narrative in Genesis is well known. We will begin rather with the names of the wives of her sons. The three sons of

Adam and Eve are not all married as 'Abēl is killed by Qāyan before he can marry. 'Abēl therefore produces no offspring. The effect of this story (Jub 4) on the parents produces some very significant elements. As in the Genesis narrative (Gen 4), Qāyan is cursed and made a fugitive for the wrong he has done to his brother. In Jubilees the emotional impact this murder has on Adam and Eve is presented in graphic detail and they become very human to the reader. For 28 years (Jub 4:7) they mourn the death of this son, their beloved 'Abēl. Finally, the reader is invited to experience their joy as Eve becomes pregnant with Sēt (Gen 4:25). The word play on שֵׁת and שָׁת is not evident in the Ethiopic where ሴት: and ኣንሥኣ: (the Hebrew cognate is נשא) are used, but the etymology is clear; Sēt has replaced 'Abēl (Jub 4:7).

Perhaps the most interesting expression in the verse parallel to Gen 4:25 is ካልኣይ: "a second seed" which replaces the Hebrew זרע אחר. On the one hand, if one accepts ካልኣይ: as the ordinal[8] a problem arises. Sēt is the third son born and yet here he is named as second. His name may have been seen as a word play on שתים שנים.

On the other hand, if ካልኣይ: is not to be taken as an ordinal[9] but as an equivalent for the Hebrew adjective אחר "another," then Sēt is merely seen as a replacement for 'Abēl. One boy has been substituted for another. The following phrase ህየንተ: ኣቤል: "instead of 'Abēl" suggests that 'Abēl's lost genealogical line is *not* being considered. With the birth of Sēt there are now only two surviving potential lineages: those of Qāyan and Sēt. It is simpler to think that the author meant "another" and not "second."

Two years after Qāyan was born Adam and Eve produced a daughter,

'Āwān (ዓዋን:). In Ethiopic, since ዐ (Aleph) replaces original Hebrew ע,[10] ዓዋን: is most likely from Hebrew עון "iniquity" and not from און "wickedness". In this instance, the difference between the two possible etymologies of her name makes little difference in meaning. Although there is no explicit connection, one cannot help but notice that the very next phrase after she is introduced describes the murder of 'Abēl. Qāyan marries this woman and they produce a son ሄኖክ:, 'Ēnoḥ.[11] The narrative here follows the Genesis story concerning the building of a city (Gen 4:17). The only reason for introducing 'Ēnoḥ at all is to demonstrate the justice to be meted out to Qāyan: Qāyan killed his brother with a stone and is killed by the same as his house falls on him (Jub 4:32). The retribution is indirectly caused by the son he has produced; and as he dies, so dies any chance that his offspring will possess or will be "holy seed". This son of Qāyan, who is associated with cities, is never heard of again.

Significant for the purpose here is the distinct difference between the genealogy of Gen 4:17-22 and that found in Jub 4:9. The eight-generation line in Genesis is halted abruptly after only three generations in Jubilees. It seems that the controlling factor is the name of the wife of Qāyan, that of 'Āwān. Qāyan has committed a heinous crime by murdering his brother. He has married a woman whose name is equally unfavourable. Such a combination as these two could never produce acceptable offspring - the line is doomed before it begins. It seems reasonable then to support the position that the first line intended to produce holy seed was 'Abēl's and the other line intended to produce holy seed was Sēt's while the line of Qāyan was not even considered. The word ካልኣይ: can be read as the adjective " another" and the woman's name is in either instance quite consistent with the narrative.

The second daughter of Adam and Eve to be mentioned (Jub 4:8) is 'Azurā ኣዙራ;[12] who becomes the wife of Sēt. Lipscomb has associated ኣዙራ with the Hebrew root עזר.[13] The Qumran fragment 11QJub 1 does not preserve the Hebrew names of the wives and in the name אזורה only the final ה is clear.[14] The Ethiopic cannot be certainly interpreted as related to עזורה "the helped one"; it could just as easily come from אזורה "girded". All that can be said for this name is that its meaning is not unfavourable.

Sēt and 'Azurā produce Hēnos (ሄኖስ) and No'ām (ኖኅም) who marry and themselves produce Qāynān (ቃይናን). No'ām is from the Hebrew נעם "to be lovely" and as Lipscomb has suggested[15] it is possibly related to the woman of Gen 4:22, נעמה the sister of Tubal-Cain. These women should not be considered to be the same person, as one is a descendant of Qāyan and the other of Sēt. What is clear in Jubilees is that the name of the woman is favourable, "the lovely one", a suitable name for the woman married to the man who preserves the Adamic line and who "began to call on the name of the Lord on the earth" (Jub 4:12).

The wife of Qāynān is Mu'alēlēt (ሙዓሌሌት) which Lipscomb suggests is derived from הלל "to praise" and is related to מהללאל (Gen 5: 12). This was also the position of Charles,[16] who translates the name as "she who praises God". There is little reason to doubt the suggestion of Charles here and so once again the name of the woman has a favourable meaning and the theory is supported.

The next in the list of descendants is Malāl'ēl (ማላልኤል) who married his cousin Dinā (ዲና) derived from דין "to judge". דינה is the name of the daughter of Jacob in Gen 30:21 and so the name has biblical support which the other names do not have. At first glance this name seems to have little to do with the narrative. Her significance is soon

seen, however, when the story of her son is considered.

The son of this marriage is Yāred (ܝܪܕ) from the root ירד. Here the play on the name is clear; his name is ירד, for in his time the angels of God descended (ירדו) upon the earth.[17] Here the aetiology adapted by the author of Jubilees from the tradition depicted at Gen 6:1-8 clarifies his method of interpretation. He has adapted the tradition of the Watchers so that the event explains the name of the person in whose time the event arose. The Jubilees redactor has also changed the tradition from the negative purpose in Genesis, where the angels corrupt the earth, to a positive purpose. In Jubilees the Watchers have descended to earth not in order to have intercourse with the daughters of men in the first instance as in Gen 6, but they have descended so that they might instruct men to do judgment (ܕܝܢ) and uprightness (ܟܘܢ) on the earth (Jub 4: 15). Is it mere coincidence that the mother of Yāred is named Dinā and that in the same sentence the Watchers descend to do judgment? Or is the name Dinā an intentional aetiology in the same way that the aetiology of Yāred has been developed? It seems that the name of Dinā has been carefully chosen and the statement following her name about the judgment of the Watchers is an intentional aetiology of the author of Jubilees.

Following the practice of his father, Yāred marries his cousin whose name is Bārāka (ܒܪܟܐ)[18] from Hebrew ברכה "blessing". This blessed one produces the famous Hēnok (ܚܢܟ)[19] who is the forerunner of Moses in calendrical matters. As has been shown above, the calendar is central to the purpose of the author and here Hēnok learns how to write and writes down the signs of the heavens in relation to the months and years. It is no surprise then when it is realized that this Hēnok who is given calendrical knowledge has a mother called Bārāka. Once again the implicit aetiology seems to be intentional.

The next woman mentioned is 'Edni (ኤድኒ:) the wife of Hēnok. The original Hebrew was most likely עדני "my delight".[20] The context here is important. In the Book of Dreams (1 Enoch 83-90) a similar but more detailed tradition is found. In 1 Enoch 85:3, Hēnok's wife is ኤድና: 'Ednā "Delight". The 1 Enoch tradition is written in apocalyptic style and there is much greater detail than in the Jubilees account. It is most likely that the tradition of 'Ednā/'Edni predates Jubilees and 1 Enoch, but the significance of the name is in the way the author of Jubilees has used this naming tradition. Hēnok who is placed in the Garden of Eden (ኄደን:), Hebrew גן-עדן, marries a wife with the name עדני. This is certainly a purposeful naming tradition which was used as such by the author of Jubilees.

Hēnok and 'Edni produce a son named Mātusālā (ማቱሳላ:). It is at this time when the Watchers who have descended begin to unite themselves with the daughters of men (Jub 4:22). It is difficult to understand why this tradition concerning the intercourse between the Watchers and the daughters of men is mentioned here, when the full account is given later at Jub 5:1ff as the reason for the flood. In Jub 4:24 Hēnok testifies against them all before he is taken into the Garden of Eden. Hēnok and not Mātusālā has remained as the central figure in the narrative, and so the sin of the Watchers has nothing to do with Mātusālā but rather with Hēnok.

This passage (Jub 4:16-26) has certain eschatological elements which suggest a relationship to the parallel sections of the apocalyptic work, 1 Enoch. Davenport[21] has carefully considered this unit and has concluded that it is a non-eschatological passage containing incidental eschatological terminology. At Jub 4:26 the content is certainly eschatological, as the motif of new creation is mentioned,[22] yet Davenport

has ignored this explicit eschatological reference, grouping it with what he has labelled non-eschatological material.

Of interest to the present discussion is the source-critical analysis of Davenport. While his purpose in his source-critical analysis was to detect eschatological traditions, he does deal with the genealogical material which is found there. Davenport suggests that the form of the genealogy has received two extensive modifications, one before our author received the tradition, and another modification made by the Jubilees author himself.[23] According to Davenport, the original genealogy included verses 16, 20 and 23a. These read as follows:

> 16 And in the eleventh jubilee Jared took to himself a wife and her name was Baraka... and she bare him a son.... and he called his name Enoch.
>
> 20 ...he (Enoch) took to himself a wife and her name was Edni.... and she bare him a son and he called his name Methuselah.
>
> 23a And he (Enoch) was taken from amongst the children of men...

This is the basic form of genealogical notice which we find in Genesis except for the addition of the name of the wives. Considering the fact that the naming of the wife does not depend on an earlier tradition as far as we know, it seems more likely that the received tradition did not have the names of the wives but resembled the tradition found in Gen 5:18-24.

The first expansion of the tradition according to the theory of Davenport includes verses 17-18a. This section tells that Enoch was the first on earth to learn writing and to put down the details of the calendar, which would certainly be of central importance to our author. This tradition is noticeably close to the discourse found in 1 Enoch

91-94[24] and probably depends upon this tradition. This discourse in 1 Enoch is related to the calendrical position in Jubilees, for its apocalyptic timetable discusses the events of the world eras based on the "weeks of years" scheme.[25] Because of the relationship between the 1 Enoch and Jubilees traditions at this point, one might have expected the Jubilees author to digress from his genealogical form and repeat some of the Apocalypse of Weeks material but he merely informs us (Jub 4:19) that the weeks of the jubilees are recounted until the day of judgment.

Davenport suggests that verse 19 is not part of the angelic discourse but is from his redactor, R^1.[26] There is little reason to suggest that verse 19 is from a different hand than the rest of the passage. The verse fits in well with the direction of the passage giving the reader information concerning the visions and writings of Hēnok. The author of Jubilees wrote about the calendar (Jub 4:17), the Jubilee weeks (4:18) and in a vision he was able to see both past and present history (4:19). This is in exactly the same order as the appearance of the material in 1 Enoch. There the calendrical material is recorded first (1 Enoch 72-82), followed by the discussion about the weeks of jubilees (1 Enoch 83-90); and finally past, present and future history is presented in the Apocalypse of Weeks section (1 Enoch 91-94). The verses in Jubilees are single-sentence summaries of the 1 Enoch material in exactly the right order. There is no need to suppose that a R^1 redactor was at work in verse 19,[27] and the intent of the verses is certainly eschatological. I therefore consider this view of Davenport to be wrong. The importance of this for our subject is that the author of Jubilees has used past traditions extensively but that the tradition about the names of wives is original to him.

This brief discussion began with a consideration of the name

of the wife of Hēnok in Jubilees, and at this point the narrative continues with Hēnok entering the Garden of Eden. The son of 'Edni marries a woman with a similar name, 'Ednā (ኢድና:), which is the name of 'Edni in 1 Enoch. This one named "Delight" or "Paradise" produces a son named Lāmēk (ለሜክ:) who is the father of Nox (ኖሳ:).[28]

It is well known that Nox and his line are the only survivors of the flood and so, once again, it hardly seems coincidental that the mother of Nox, the wife of Lāmēk is Bētēnos (ቤቴኖስ:) from the Hebrew בת אנוש "daughter of mankind".[29]

Nox, the only survivor of the flood and thus in the new world the first progenitor, has taken a wife named ᶜEmzārā (ዕምዛሁ:). Except for the unusual use of Ethiopic Ayin for Hebrew Aleph[30] the name is easily transliterated into Hebrew as אמזרע. The Ethiopic ዘርኢ: might have been expected, but since the Ethiopic translator was most likely unaware of the intention behind the Hebrew original and since it is very likely that he was working with a Greek translation and not directly from the Hebrew,[31] the suggestion אמזרע, "mother of offspring" is justified. There can be little doubt from the context that this is the intention. In fact, it could almost have been anticipated that the author of Jubilees would have begun this new era of history with a wife of such a name. It is certainly in keeping with the literary form he has been following. In this new creation three sons of Nox are produced, reminiscent of the three sons of Adam in the initial creation story.

Before the genealogy continues, a long narrative section intervenes. The genealogy is reintroduced in Chapter 7 and the three wives of the sons of Nox are presented. The wife of Kām in Jub 7:14 is Nē'ēlātamā'uk (ኔኤላተማኡክ:). Etymologically this name presents some difficulty.

Charles suggests that it is a composite name from the Hebrew נחלה (construct form נחלת) and מָחוֹק.[32] He does not propose a meaning for the name. This suggestion assumes Hebrew ח has lost its value in the movement of the word through Greek and is now replaced by Ethiopic ኀ . This would not be too difficult a shift and so Charles' reading can be accepted even though a suggested meaning cannot be offered.

The wife of Yāfēt (ያፌት:) is 'Adatannēsēs (ዐዳትነሴስ:) for which no obvious interpretation can be suggested. Sēm (ሴም:) marries Sēdēqētēlebāb (ሴዴቄቴልባብ:) which is certainly from צדקת לבב "Righteousness of the heart."[33] There are no aetiologies presented for the names of the three women, but they do all have cities named after them (Jub 7:17). It is of note, however, that the offspring of Sēm become the true line and their mother is named "Righteousness of the heart." Again, this hardly seems coincidental.

'Arfāksed (ዐርፋክስድ:) is the son of Sēm and through him the line from Nox continues. 'Arfāksed marries his cousin Rāsu'eyā (ራሱዔያ:) perhaps from the root רצה "to be desirable."[34] They produce a son, Qāynām (ቃይናም:) who marries the daughter of his great-uncle Yāfēt. Her name is Mēlkā (ሜልካ:)[35] from the Hebrew מלכה possibly meaning "Queen."[36]

At Jub 8:3-4, Qāynām is involved in a discussion of the calendar of the Watchers. He finds a tablet containing the teaching of the Watchers concerning their observations of the heavenly omens. The sin of following the wrong calendar is a central issue in Jubilees and so it is difficult to understand why Qāynām who deviates from the divine calendar is allowed to carry on the purity of the race. However, his sin is not sexual but is calendrical. Sexual sins (i.e. marrying a Gentile) destroy the genealogy and since he has not committed a sexual sin, he is permitted to carry on

the pure line. Only those who commit sexual sins are unable to preserve the pure line. Both he and his wife are from the loins of Nox and so are able to produce a pure strain.

The next name mentioned is Mu'ak (ܡܘܥܐܟ:)[37] the wife of Sālā (ܣܠܐ:) who produces 'Ebēr (ܥܒܪ:). His wife is 'Azurād (ܥܙܘܪܕ:), possibly from the Hebrew עזר[38] "Helper". Their son Fālēk (ܦܠܟ:) from פלג has a clear aetiology. At this time the sons of Nox *divide* the earth amongst themselves.[39] The relationship is obvious. Fālēk marries Lomnā (ܠܘܡܢܐ:) possibly from לבנה "She is white" (Jub 10:18).[40] It could be related to the word לבנה meaning "moon" or, as in Cant 6:10, it could relate to a woman's beauty.[41]

It should be noted that these last two wives have an uncertain lineage. We know the names of their fathers, but there can be no certainty about their being Israelites. It is no surprise when it is discovered at precisely this point in the narrative, when the genealogical purity of the wives becomes suspect, that they produce sons named Fālēk from the Hebrew פלג and Rāgaw (ܪܥܘ:) from רעו (understood as from the root רעע) "evil".[42] The aetiology behind the name Rāgaw is clear, "...he called his name Rāgaw: for he said, 'Behold the children of men have become evil (רעו) through the wicked purpose of building a city for themselves and a tower in the land of Shinar'" (Jub 10:18b).

These women, 'Azurād and Lomnā, serve an important function within the genealogical narrative, for with the introduction of these women there is a noticeable reduction in the purity of the line. Here, also, the tower of Babel incident is introduced. Lomnā produces a son in whose time the attempt is made to build a tower to heaven. In Gen 11:1-9, the Babel story has no historical axis. It is unrelated to any of the patriarchs

and if it were removed its absence would make very little difference to the patriarchal narrative. Here in Jubilees the Babel story is rooted within the genealogy and tied directly to a particular patriarch, and thus can be dated historically to within a few years.[43] This narrative tradition of intrigue and evil has been adapted by the author of Jubilees to fit his genealogy. The evils of the genealogy, such as the presence of both the non-Israelite women and a boy named Rāgaw, are reflected in the narrative structure. Once again the relationship between genealogy and narrative structure coincide.

An attempt to bring order to the narrative can be seen in the genealogical background of 'Arā (ዐራ:),[44] the daughter of 'Ur (ዑር:) who is the son of Kēsēd (ኬሴድ:) the brother of Qāynām. Could it be that 'Arā, which is related to אור, is intended to shed a glimmer of hope into the troubled genealogy? Things are not completely righted by her son named Sērox (ሴሮክ:). The Hebrew name from Genesis is סרוג. An analysis of it is provided as though it were from the root סור. This etymology is not a scientific etymology, but is a quite typical stylistic feature frequently found in Genesis. His name is changed to Sēruk (ሴሩክ:). The original meaning of Sēruk is unclear. The aetiology in Jub 11:6 explains the name change, "For this reason he called the name of Sērox as Sērūk for everyone turned (סור) to do all manner of sin[45] and transgression,"[46] What seemed at first like a possible turning point in the genealogy again becomes a point of sin and division.

Sērūk himself becomes an idol worshipper (Jub 11:7)[47] but marries his cousin Mēlka (ሜልካ:). Could this name be an attempt to return the genealogy to its original status? These two produce two sons, the first being Nākor (ናኮር:) who marries the Chaldean 'Iyāskā (ዒያስካ:) who has

no connection to the Israelite genealogy. Nākor and 'Iyāskā produce Tārā (ܬܪܐ) who marries 'Edna. This 'Edna is the grand-daughter of the second but unnamed son of Sērāk and Mēlka. 'Edna's father, however, is 'Abrām (ܐܒܪܡ ܪ), but so is the name of her most important son.

At this point in the genealogy we are noticing that names are beginning to recur that have been used previously. A return to the order of the past is being consciously controlled by this technique. Order is being restored in at least five ways:

1. 'Abrām is not wicked but righteous (Jub 11:15-17),
2. A land fertility tradition is inserted[48] in a strategically located position,
3. 'Abrām marries his *sister* Sārā (ܣܪܐ). Much discussion has centred around the wife-sister relationship of these two in Genesis.[49] However, in Jub 12:9 the relationship is clear: she is his half-sister, the daughter of his father (ܐܒܝܗ ܕܐܡܗ). The purpose behind her relationship to 'Abrām is consistent with the relationships of the wives in the early portions of the genealogy where the Patriarchs have married their sisters: order is being restored. In the following chapter on Chronology the re-ordering of the dates around Abraham will be discussed. It is at this point where brother once again marries sister (as in the pre-flood era) and the dates in their chronological notices become regular again.
4. 'Abrām before his marriage challenged the validity of his father's worship of idols and now he puts action to his words and burns the idols. His unrepentant brother, Nākor,attempts to save the gods and is consumed by the fire. This is an obvious device to remove his progeny from the narrative; it is reminiscent of the physical

removal of Qāyan from the line in the beginning of the list. Only the line of the righteous will survive.

5. 'Abrām realizes that seasonal events such as the signs of the sun, moon and stars need not concern him (Jub 12:17-20). This is in effect a return to the position on these matters at the time of Hēnok.

These five factors clearly lead to the conclusion that a new beginning is intended. The blessing and promise to 'Abrām which follows (Jub 12:22-24) is a logical conclusion to the restored order that has just been created.

It is now possible to conclude that Davenport was wrong when he made the claim that the names of the wives had no relevance for the concerns of the author of Jubilees. We have shown above that the names do in fact have considerable relevance and that through the addition of them to the genealogies and the narratives, the author of Jubilees has in some measure reshaped the traditions of the patriarchs. We will now begin a discussion which has a biblical precedent[50] and which is of some importance to our author: the problem of mixed marriages.

B. Mixed Marriages in Jubilees

This chapter began with a discussion of the unusual feature of the presentation of the wives of the patriarchs in Jubilees. There it was concluded that the relationship between the names of the wives and the surrounding narrative was interdependent. We will now consider in more detail the proposition that foreign wives are related to the downfall of the genealogical line in the Jubilees material.

The formula in Jubilees for the presentation of these women

often includes genealogical information in addition to the name of the woman, i.e. her father (or mother) is the brother (or sister) of the father of the patriarch. When this kind of information is presented, it is clear because of the kin relationships that no foreigner has entered the genealogy. When this information is omitted, the possibility that a foreign wife has been taken must be considered.

Again, this section argues against Davenport's conclusion that these names are here merely to satisfy a curiosity.[51] This section will again work from the assumption that the addition of these names is an intentional device used to legitimize the patriarchal line. One small problem must be dealt with before the genealogical relationships are examined.

A problem arises with the method of textual emenation used by Charles when he deals with the patriarchal ancestors. While certain texts read ወልተ: እኅተ: አቡሁ: "daughter of the sister of his father" in all the Ethiopic MSS (Jub 4:15, 27, 28, 33), Charles on the basis of a Syriac fragment and a Greek scholion[52] has emended the Ethiopic to read ወልተ: እኅወ: አቡሁ: "daughter of the brother of his father." But are the names of the ancestors masculine? If they are, then the emendation of Charles would be justified.

Barāki'ēl (ባራኪኤል:) is the name of two different ancestors in Jub 4:15 and 29 where Charles has emended the text. The name is attested in the Old Testament at Job 32:6 where the Hebrew is בַּרַכְאֵל,[53] as ברכיה at Zech 1:1,17, and as ברכיהו at 1 Chron 6:24 (Hebrew), 15:17 and II Chron 28:12.[54] This name Barāk'ēl is of the verbal sentence type with אל subject.[55] The verbal part of the name is perfect tense and might possibly be Piel stem.[56] In the biblical references cited above, the name is clearly masculine and so on this basis alone Charles

emends the text of Jubilees.

The other names of the fathers/mothers-in-law also exhibit the divine suffix. While the etymology behind the names ሕዝያል፡, ኀዝዕኀል፡, and ሕኤኤል፡ is unclear, they could possibly be feminine. The Hebrew possibilities behind the names are numerous,[57] but few suggest possible feminite forms. There are certain Hebrew names in the Bible which occur of both men and women,[58] a phenomenon which is present in other languages as well.

While there seems to be good reason for emending the names, emendation does not account for the use of the feminine by the author of Jubilees. In a work that is full of reference to women, there must be a reason for using the references to mothers-in-law.

The full expression "daughter of...the daughter of his father's sister" (Jub 4:15,27,28,33), clearly shows a distinct female lineage operating in the pre-flood era. The purity of the genealogy is dependent upon the females in the list. In Table 1,1a,1b it can be seen that the relationships of men marrying sisters and cousins has resulted in a tight genealogical unit. This closed marriage system is quite intentional, for by uniting husbands and wives to similar parentage, the purity of the line is ensured. Whether one follows the family line back from Nox through Bētānos or through Lāmek, one still arrives at 'Adām!

There is good reason then for not emending the text as Charles has done. By changing mothers-in-law to fathers-in-law a feature of the genealogy which is significant has been masked. Even though the names themselves do not appear to be feminine, the expression 'daughter of...the daughter of his father's sister" should stand.

After the flood, the genealogy no longer exhibits this phenomenon.

The wives of the sons of Nox and ᶜEmzara have no parentage named for them.[59] One cannot trace the line back from 'Abraham to Nox through the women (see Fig. 4:2). The wives of 'Ebēr and Fālek are not related to the genealogy at all. 'Eber's wife is 'Azurād, the daughter of Nēbrod but in Jubilees no genealogy for him is given.[60] Perhaps this is the result of the confusion between the supposed location of Nimrod in Babylon[61] and the lands of the sons of Ham in Jub 8:22-30 which are in the south.[62]

The wife of Fālek is Lomnā the daughter of Sinā'ar (Jub 10:18).[63] As is so often the case,[64] ሲናኣር : is the name not only of a man but also of a country, in this case Babel (Jub 10:25).[65]

In Jubilees the genealogy of these two women is not directly related to the pure line from Adam but they are from the area of Babylon. Lomnā and 'Azurād are daughters of illegitimate offspring who bring a negative element into the genealogy. The intention of the author can be seen in his placement of the Tower of Babel story precisely at this point in the narrative. This wicked act occurs at the very moment when women from the north are married.

The narrative then continues with the descendants of 'Ur in 'Ur (Jub 11:1-14) and in this section a strange tradition is found that tells how the Prince Mastema causes birds to devour the seed and fruit of the land (Jub 11:11).[66]

If one remembers that the curse of the first sin was that it would be difficult to eat (Jub 3:25; Gen 2:17-19)[67] then there is a parallel here. The sin of idol worship, buying and selling of slaves, warfare and sexual perversions produce the same effect. Sin causes the ground to be cursed. That which sustains man, i.e. food, becomes laborious to produce.

The narrative becomes favourable after the birth of 'Abrām who develops the seed drill (Jub 11:23-24)[68] so that the land can again be productive. At this period of restoration of the land the form of the genealogy returns to the earlier orderly style. The mother of 'Abrām is 'Ednā, the daughter of 'Abrām one of Tārā's forefathers. It was shown earlier that order was restored at the time of 'Abrām[69] and here another form of restoration, a return to the genealogical formula previously used, helps to restore this order.

The interest of the genealogy is legitimacy and its dependence upon the women is most clear in the genealogical information presented for the wives of 'Abrām and his brothers. Both Nakor and 'Arām take wives with no name or genealogy given. They are obviously not the legitimate producers of the pure genealogy and so their genealogy is intentionally omitted. 'Abrām, however, marries ሳሪ፡ (Sārā), ወለተ፡ ኀቡሁ፡ (the daughter of his father). While one cannot be certain whether Sārā is his sister or half-sister as no mothers are mentioned, the intention is still clear; legitimacy of the genealogy to follow is dependent upon 'Abrām marrying his sister. Order is restored to the lineage.

Not until Yeseḥaq needs a wife does the wife of Nākor become significant. The holy seed of 'Abrām is to pass through Yeseḥaq (Jub 18: 15-16; and esp. Jub 16:17-18) and so Yeseḥaq's wife must be of the house of 'Abrām. Through this man Yeseḥaq will arise the plant of righteousness (Jub 16:26). The genealogy of Yeseḥaq and Rebeqa (Jub 19:10) is directly linked through Mēlkā, sister of 'Abrahām and Nākor. A graphic description will make the relationships clearer.

Figure 1

The Ancestors of Jacob

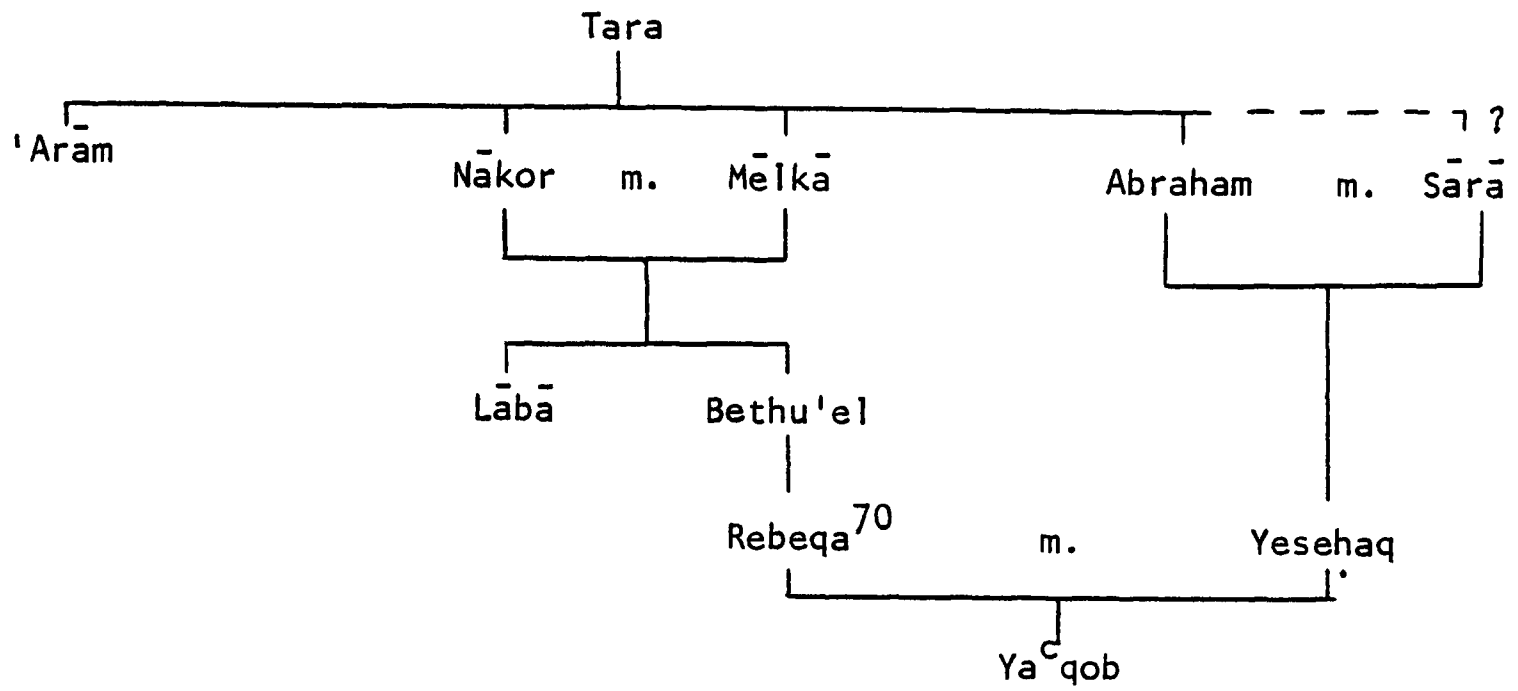

Isaac (Yesehaq) is clearly the uncle of Rebecca (Rebeqa). This relationship, uncle marrying niece, produces the twins Ya'qob and 'esaw. 'Abraham's love for Ya'qob and the promised holy seed is to pass through him (Jub 19:15-30).

In Jub 20 a very general charge to purity of the descendants of 'Abraham is given. Marrying a wife of the daughters of Canaan is paralleled with fornication and uncleanness (Jub 20:4). This charge to remain pure which results in the seed being blessed becomes more specific as it is applied first to Yesehaq (Jub 21:21-25) and then to Ya'qob (Jub 22:11-24).[71] Not only will the seed of Ya'qob be righteous (Jub 22:11), but it will also become a holy nation (Jub 22:12).

In this blessing of Ya'qob, anti-Canaanite (anti-Gentile) implications are clear - none of the seed of Canaan will be saved on the

day of judgment (Jub 22:21).[72] The reason for the purity of this line is also clear - in the seed of Ya^{c}qob, the house (genealogy) of 'Abrahām (ቤት: ኣብርሃም:) will be established forever. Ya^{c}qob then lies in the bosom of 'Abrahām[73] and 'Abrahām dies.

As in the Old Testament, marriage with non-Israelites is expressly forbidden and as we might expect, the prohibitions against mixed marriages are most explicit in the Pentateuch. In Lev 20:2, if a man gives his daughter to a Gentile the law prescribes stoning, and Deut 7:3[74] forbids marriage with Gentiles. Polemic against the marrying of Gentiles is most explicit in Jub 30 where the injunctions against those who defile Israel[75] are angry and vicious and such acts as the avenging of the rape of Dina is recorded as "righteousness and a blessing" (Jub 30:23). In a moving scene (Jub 25:1-10), Rebeqa admonishes Ya^{c}qob not to marry a Canaanite woman and he assures her that not only will he heed her words, but that at the age of 63 he has touched no woman (Jub 25:4). Then he promises that his wife will be taken from the seed of his father's house (Jub 25:5). This action will ensure against corruption (Jub 25:7,10).[76]

It is significant that the blessing of Ya^{c}qob (Gen 28:1-4; Jub 27:9-11)[77] is put into the mouth of Rebeqa. She has been given a pure son and a holy seed which will continue for generations. Before the blessing of Lēwi and Yehudā by Yesehaq, Rebeqa blessed them also (Jub 31:7). The narrator has intentionally had the matriarch bless Ya^{c}qob and the children of Leyā, the first wife of Ya^{c}qob. Not only do they have the blessing of a patriarch but also that of a matriarch. The lineage has been legitimated.[78]

C. A Wife-Naming Tradition - Jub 34:20-21

Immediately following a tradition which gives the reason for the observance of the Day of Atonement (Jub 34:18-19), namely that on this day Jacob was deceived into thinking that his favourite son Joseph had perished, the wives of the sons are named.

Davenport[79] has suggested that Jub 34:20-21 and Jub 39:2 found these passages in reverse order in the original tradition, Jub 34:20-21 following Jub 39:2. While there is no external proof for Davenport's suggestion, it can be debated on internal grounds. Again, the context of the tradition must be examined to determine the intention of the redactor in placing the material in this location within his narrative structure.

Unlike the story in Gen 37 where Reuben and Judah appear to be on the side of Joseph, in Jub 34 Joseph had no brotherly support. They are all partners in the deception and following their sins and their grieving, they all take wives. The relationship of sinning and wife-taking is again paralleled.

The names of the wives, their lineage and place of origin are as follows in Figure 2. From this it is not difficult to see that five women have geographical notes and one has a genealogy. When Semme^{c}on (ܫܡܥܘܢ) repents and marries a Mesopotamian (Jub 34:21), then only Yehudā is left with a Canaanite wife. She is, as has been noted, from the Genesis tradition and will be considered in our discussion presently. Only one woman has a genealogy, Mēlkā, the wife of Lēwi, who is the daughter of 'Aram, who is from the seed of the sons of Tārāh. Lēwi, who is blessed by Rebeqa and Yesehaq along with his brother Yehudā, marries a woman who has

Figure 2

The Sons of Jacob and Their Wives

Son of Jacob	Wife Name	Descent	Place of Origin
ሮቤል፡	ኢዲ፡		ከነናዊት፡
ሰምዖን፡	1. ኢዲበኢ፡ 2. ?		ከነናዊት፡ ሜሰጶሐምያ፡
ልዊ፡	ሜልካ፡	ኢሁም፡- ታሁ፡	
ይሁዳ፡	ቤተሱኤል፡ 80		ከነናዊት፡
ይሰስር፡	ሐዘቃ፡		
ዘቡሎን፡	ኒኢማን፡ 81		
ዳን፡	ኤግ.ለ፡		
ንፍታሌም፡	ሁሱኤ፡		ሜሰጶሐምያ፡
ጋድ፡	ማከ፡		
ኢሳር፡	ኢዮና፡		
ዮሴፍ፡	ኢስኔት፡		ግብጻዊት፡
ብንያም፡	ኢየሰከ፡		

a genealogy related to the pure Israelite line. The seed that springs from the loins of Lēwi is thus legitimated just as his ancestral heritage was legitimated in Jub 22 and 27. By this wife-naming process at Jub 34: 20-21 the meaning is clear - only the line of Lēwi is legitimated.

The author of Jubilees has been faithful to the genealogy in Genesis by preserving the incident of the marriage of Yehudā and Bētasu'el

the Canaanite, a tradition which is developed in T Judah chapters 8-17. In T Judah the sin of marrying a Canaanite, even while in a drunken state (T Judah 13:6-7), is condemned. Yehudā, in an attempt to correct his error, takes a wife for his son Er from the daughters of 'Aram but Er rejects his father's choice, desiring instead a Canaanite woman like his mother. Not only Er, but his brother Onan refuses to produce children through this daughter of 'Aram and they are slain as a result.[82]

It is difficult to understand why the seed of Yehudā must be preserved through this particular daughter of 'Aram. Would it not have been possible to ignore her and permit Yehudā to marry another daughter of 'Aram? This would eliminate the problem of Yehudā and the harlot Tamar. The author of Jubilees is faithful to a Genesis genealogical tradition when there is one provided and so Jubilees preserves this tradition. Jubilees makes it very clear though that Tamar was not touched sexually by either Er or Onan and this is the reason Yehudā is allowed to have a second generation through Tamar (Jub 41:24-27).

In Jubilees this story of Tamar does not come before the Yosef material but is found between the seven years of fruitfulness and the seven years of famine. Has the author of Jubilees implied that the sin of Yehudā has caused the famine (Jub 41:22)? The text is unclear here but this seems to be the intent.[83] What is clear is that the promise of Jub 31:18-20, that the seed of Yehudā would produce princes and judges, is preserved in its purest form. The seed of Yehudā is legitimated by the seed produced through Tamar as both are full-blooded Israelites. The genealogical information concerning a woman has a profound effect on the narrative which in this instance is a development of the Genesis tradition.

D. The Descendants of Ya^{c}qob (Jacob)

Lists of Ya^{c}qob's descendants[84] are found at Gen 46:8-27[85] and in Jub 44:11-33. This study will consider only the arrangement and numbering[86] of the list in Jubilees, and again will not be concerned with the question of historicity, but rather with that of intention.

There are some minor textual difficulties with the Jubilees list. It is difficult to determine whether Dinah or Ya^{c}qob should be counted but it seems likely that Dinah as a descendant should be instead of Ya^{c}qob who is the father.[87] The children of Zālafā (Zilpha) do not total the necessary number. All MSS agree (Jub 44:22) that Zālafā produced 14, but some names are missing. Gād and his sons should total eight but there are only six names mentioned after the name of Gād. This is easily emended by reference to the Genesis list.[88] Charles has also emended the list of the sons of 'Asēr to agree with the list in Genesis. He has suggested however, that this agrees with the number six in the Ethiopic.[89] The difficulty with his conclusion[90] is clear when the MSS are consulted. Charles has accepted the reading "six" of MS D, while MSS A and B record "five" and MS C omits the number.[91] While "six" is obvious in Genesis and fits the text of Jubilees, it should be accepted with caution. It should be noted that the daughter of 'Asēr, Sārā, is counted here, which supports the decision to count Dinā earlier. The total number of names, not counting Ya^{c}qob, but counting Dinā, is 68 plus the two additional grandsons of Zālafā which brings the total to 70. The four wives of Ya^{c}qob are counted, which also supports counting Dinā.

In Gen 46:12, Er and Onan are counted along with Shelah, Perez and Zerah but in Jub 44:15 they are ignored as they have already died.[92]

Four additional names in Jubilees are recorded as descendants of Dan. Gen 46:23, where the genealogy of Dan is presented, is a corrupt text and it is possible that the text behind Jubilees represents a fuller text than what we now have in the MT and LXX. The additional names in Jubilees bring the total number up to the required 70.

The feature of fluidity which is exhibited here[93] is clearly dependent upon the "fixed tradition" of the number 70. The author of Jubilees preserves an early list[94] and attempts to retain the correct number of 70 descendants.[95] The importance of women for our author has provided the necessary clue to account for the seemingly incorrect number of descendants of Ya^{c}qob.

E. Conclusion

This chapter began with a discussion of the names of the wives of the patriarchs. It was discovered in that discussion that the meanings of the names were directly related to their function within the narrative. This conclusion is a direct contradiction to the conclusion reached by Davenport that the additional names in Jubilees were added merely to satisfy a curiosity.[96] In this chapter it was shown that the addition of the wives' names was more than mere trivia.

One is struck with the concentration in the mind of the author of Jubilees upon the purity and piety of the patriarchs.[97] This showed

clearly in his disdain of foreign women. What is surprising in Jubilees is that here in this relatively late time a form of matriarchate is still able to be imagined and written about. One is much less surprised when traces of matrocentrism are found in the Pentateuch,[98] as the Pentateuch reflects religious and social practices of the mid-second millennium B.C., and possibly earlier, when Israel may have been a matriarchal society with female gods. It is startling, however, when it is recognized that Jubilees, which is later than even the Priestly strand in the Pentateuch, while often male-dominant in its outlook,[99] preserves semblances of both matrilineal[100] and matrilocal[101] material.

In a matriarchal society, the mother or her brothers name the child since the mother is the responsible relative, the children belong to her tribe, and the father plays no role.[102] In Genesis, while the father often names the child,[103] there are numerous instances of mothers naming the child.[104] The idea that heredity is dependent upon the mother is clearest in the Abraham-Sarah story, where Abraham claims to have no son even when the text clearly mentions Ishmael who is his son. What this text means is that Abraham has no son from Sarah, the Israelite, through whom his seed can only produce legitimate Israelites. The purity and preservation of the lineage depends upon the purity of both parents.

While in Jubilees the naming is done by the father,[105] the importance of the lineage and locality of the mother are preserved from the ancient tradition. This is most obvious in the list of the wives of the sons of Ya^{c}qob, where the wife of Lewi is descended from Tārā; but most of the others choose a wife from a locality not in keeping with the Israelite rite of choosing a wife from the region of one's mother. We

saw in fact that Simeon repented of the locality of his first wife and chose a wife from a different locality. Thus Jubilees at times preserves the ancient tradition of matrilocal choice of one's wife as in particular cases in Genesis (the choosing of Rebecca) but it goes beyond the Genesis traditions in its preservation of the rite of matrilocality. While it is impossible to determine whether Jubilees is preserving ancient traditions of matrilocality or developing new ones based on the limited references in Genesis, it is clear that the author of Jubilees was not uncomfortable with matrilineal and matrilocal traditions and based the purity of the Israelite genealogy on these phenomena.

At a time in the history of Israel when the status of women in Jewish society was being debated,[106] and male dominance was being displayed in all of its writings, the author of Jubilees is suggesting that the true identity of an Israelite depends not solely on his father's genealogy, but rather also on the genealogy of his mother. This is a most significant social regression indeed!

It has been demonstrated that not only is there no evidence to support the claim of Davenport which we have been considering, but our assessment and interpretation of the material overwhelmingly expresses the contrary. The names of the women and their role in the narrative are directly relevant to the concerns of the author. A pure genealogical line is fundamental and his use of the names and functions of the women prove his point.

Table 1

FROM ADAM TO NOAH (Ethiopic)

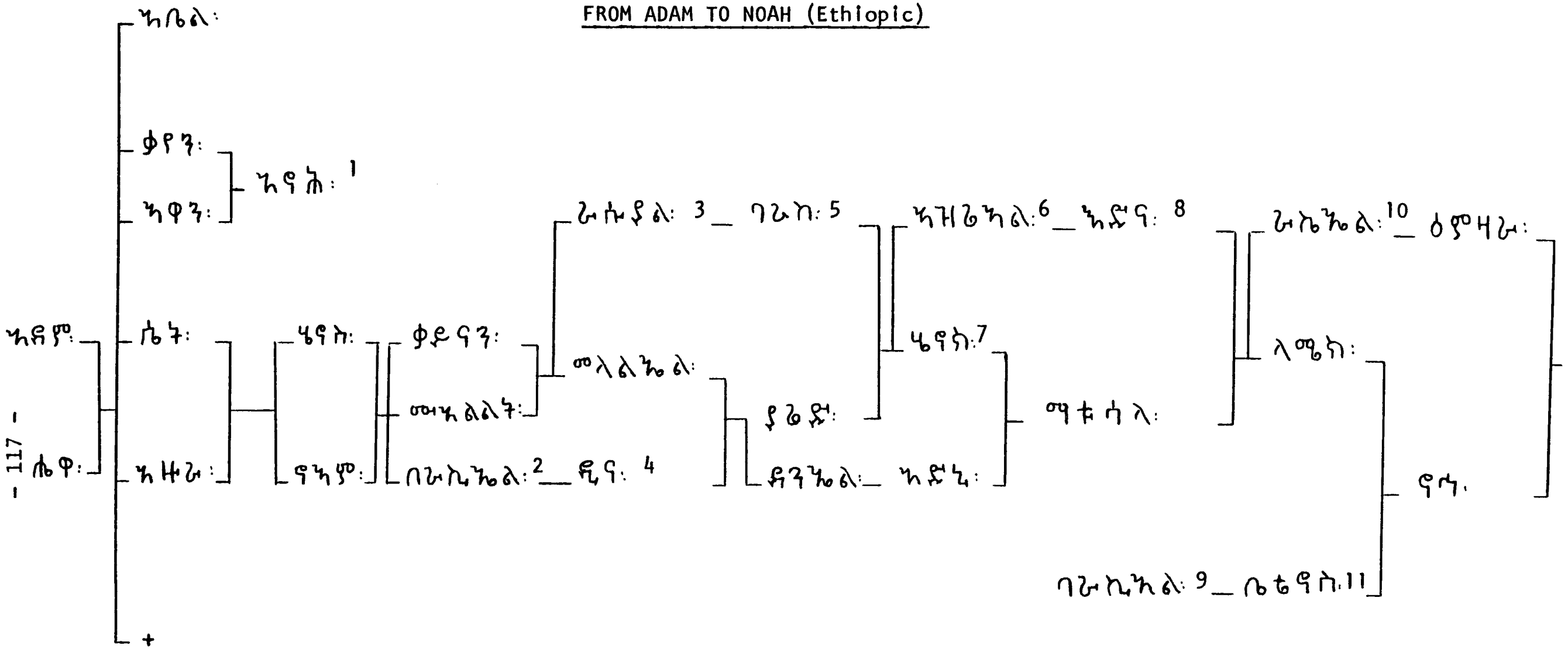

1 Gen 4:17 ሄኖኅ:

2 MS A በራኪሄል:

3 MS B ራሱኤፍል:

4 MS A ቂናን:

5 MS A ገራኮ:

6 MS A አዝራኤል:

7 Gen 5:8 ሄኖስ: supports Jubilees.
Confusion among ሀ, ሐ, ኀ see Lambdin, (1978), p.14.

8 MS A እድና:

9 MS A በራኪኤል:

10 MS A ራኪኤል:

11 MS B ቤተናስ:

Table 1a

FROM ADAM TO NOAH (Transcription)

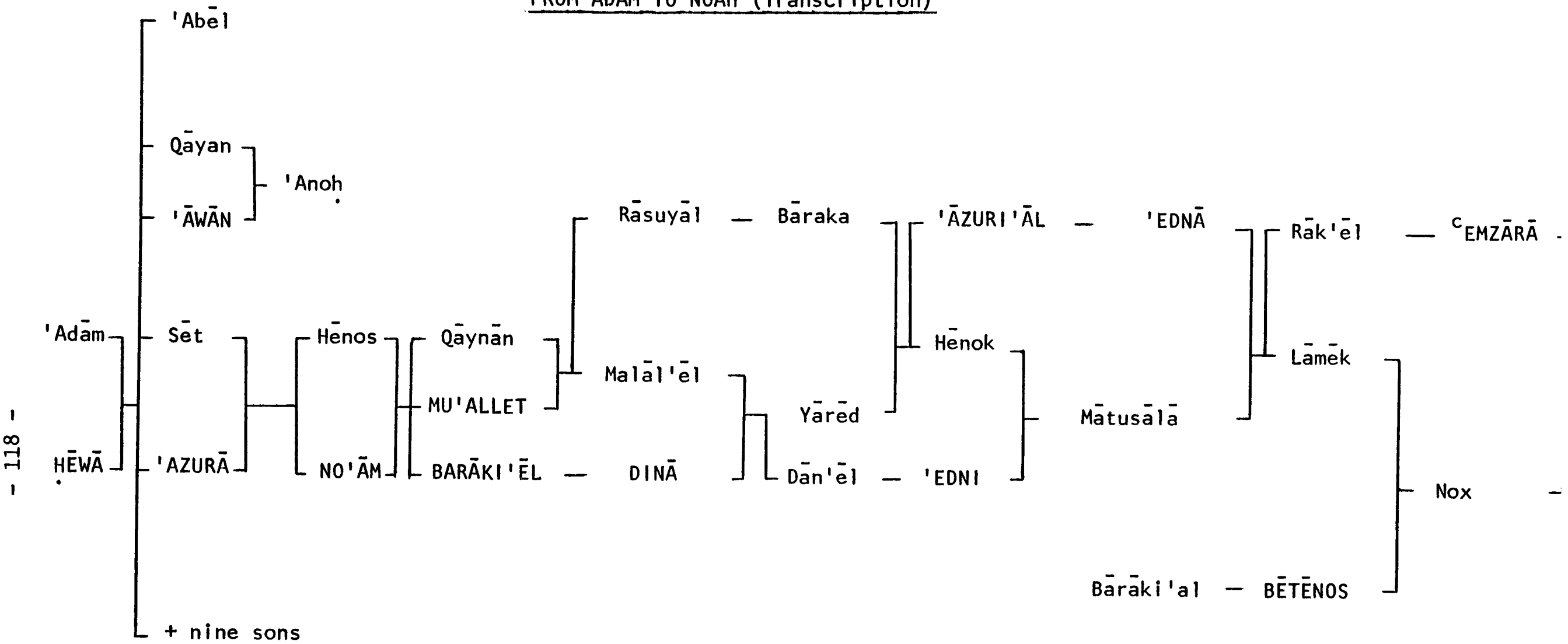

Table 1b

FROM ADAM TO NOAH (Charles)

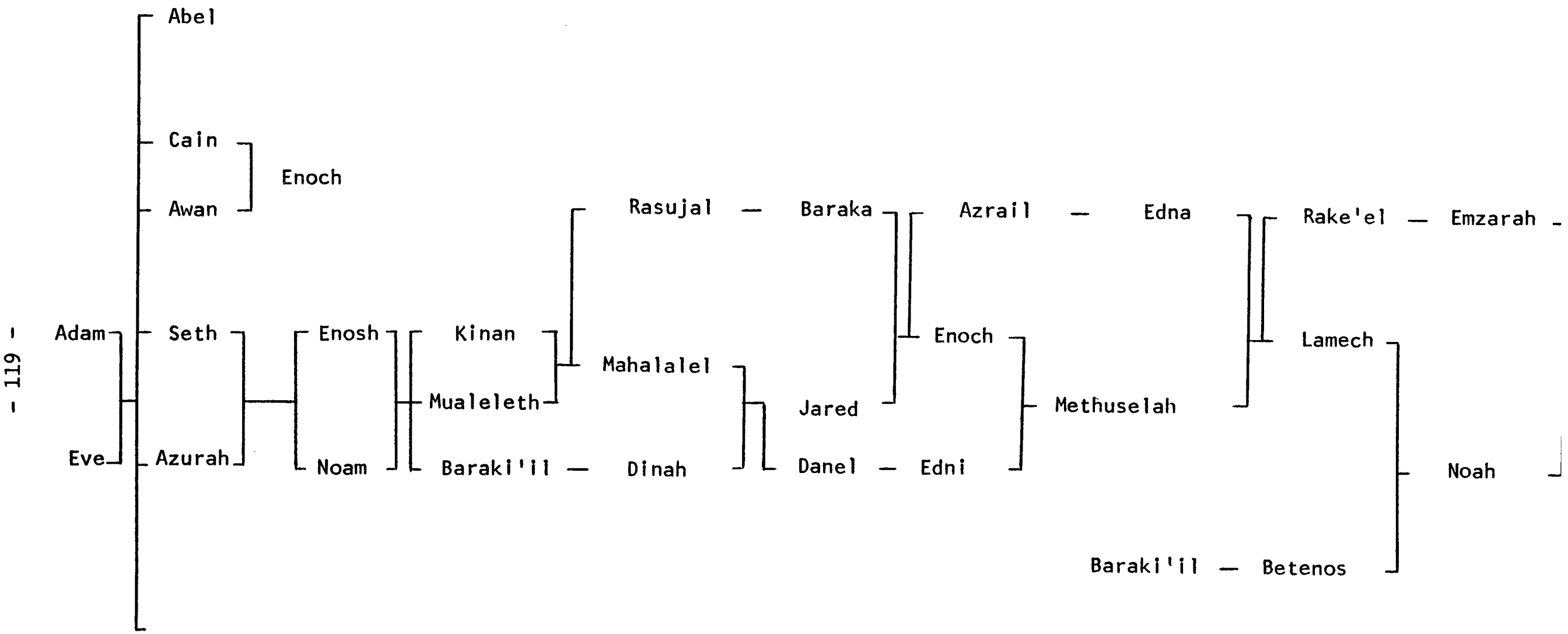

Table 2

FROM NOAH TO REU (Ethiopic)

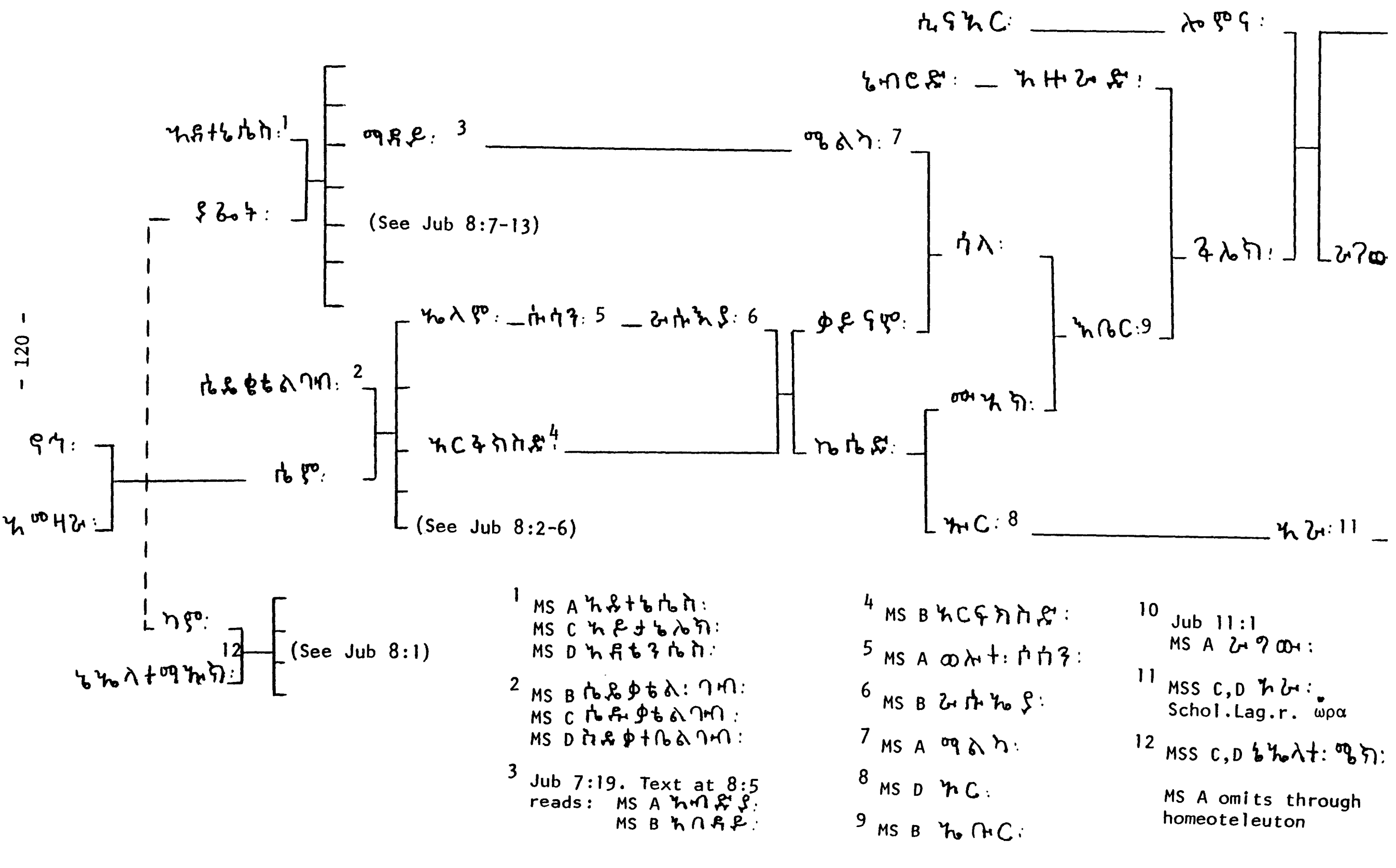

1 MS A ኤጸተፈሔስ:
MS C ኤይታፈሎክ:
MS D ኤጸቴንፈስ:

2 MS B ሴዴቃቴል: ገሀ:
MS C ሴዱቃቴልገሀ:
MS D ስዴቃተቤልገሀ:

3 Jub 7:19. Text at 8:5 reads: MS A ኤሀይያ:
MS B ኤበጸይ:

4 MS B ኤርፋክስድ:

5 MS A ወሉተ: ሶስን:

6 MS B ሩሱኤያ:

7 MS A ማልካ:

8 MS D ኤር:

9 MS B ኤቡር:

10 Jub 11:1
MS A ሩዓመ:

11 MSS C,D ኤሩ:
Schol.Lag.r. ὡρα

12 MSS C,D ኤኤላተ: ሜክ:

MS A omits through homeoteleuton

Table 2a

FROM NOAH TO REU (Transcription)

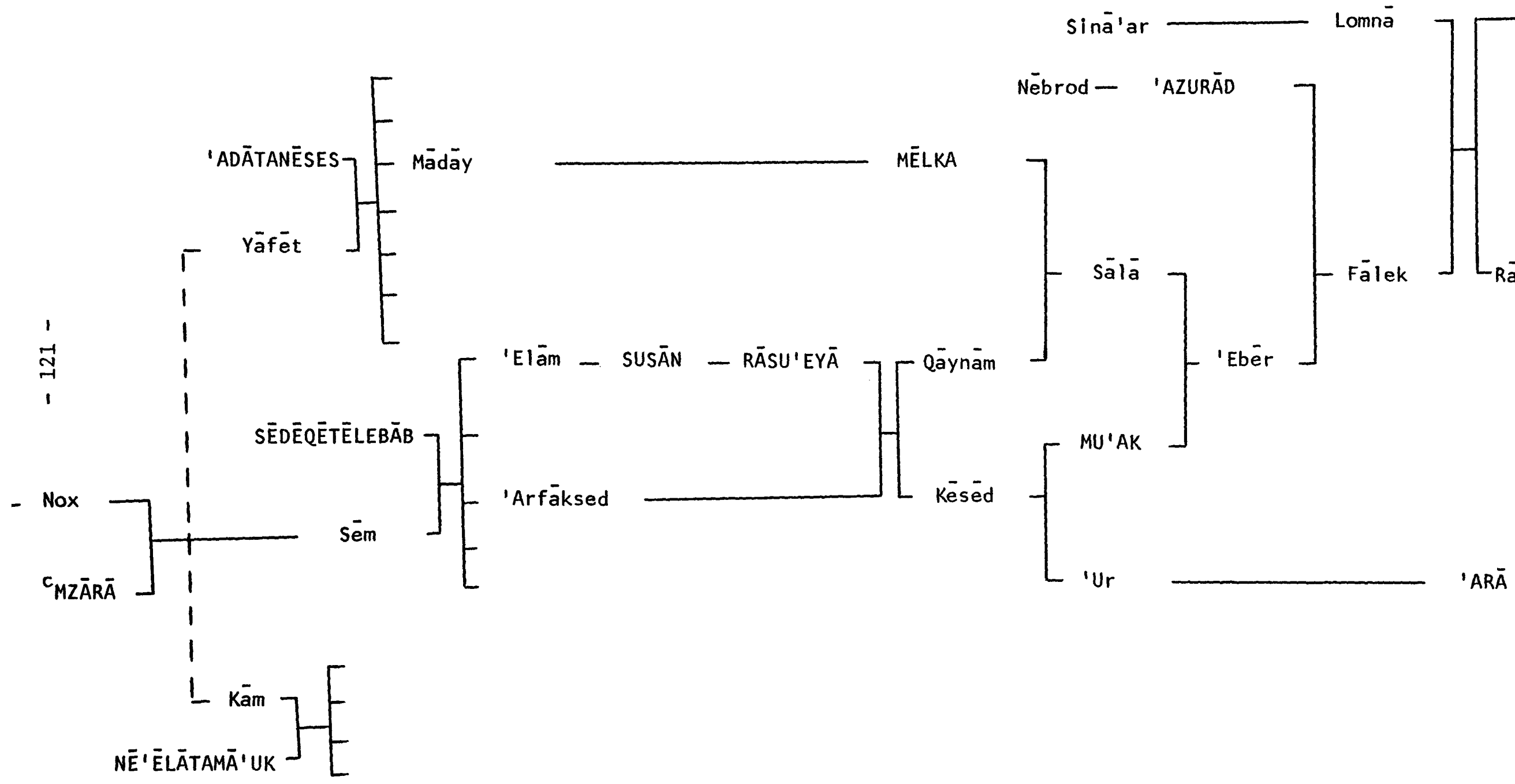

Table 2b

FROM NOAH TO REU (Charles)

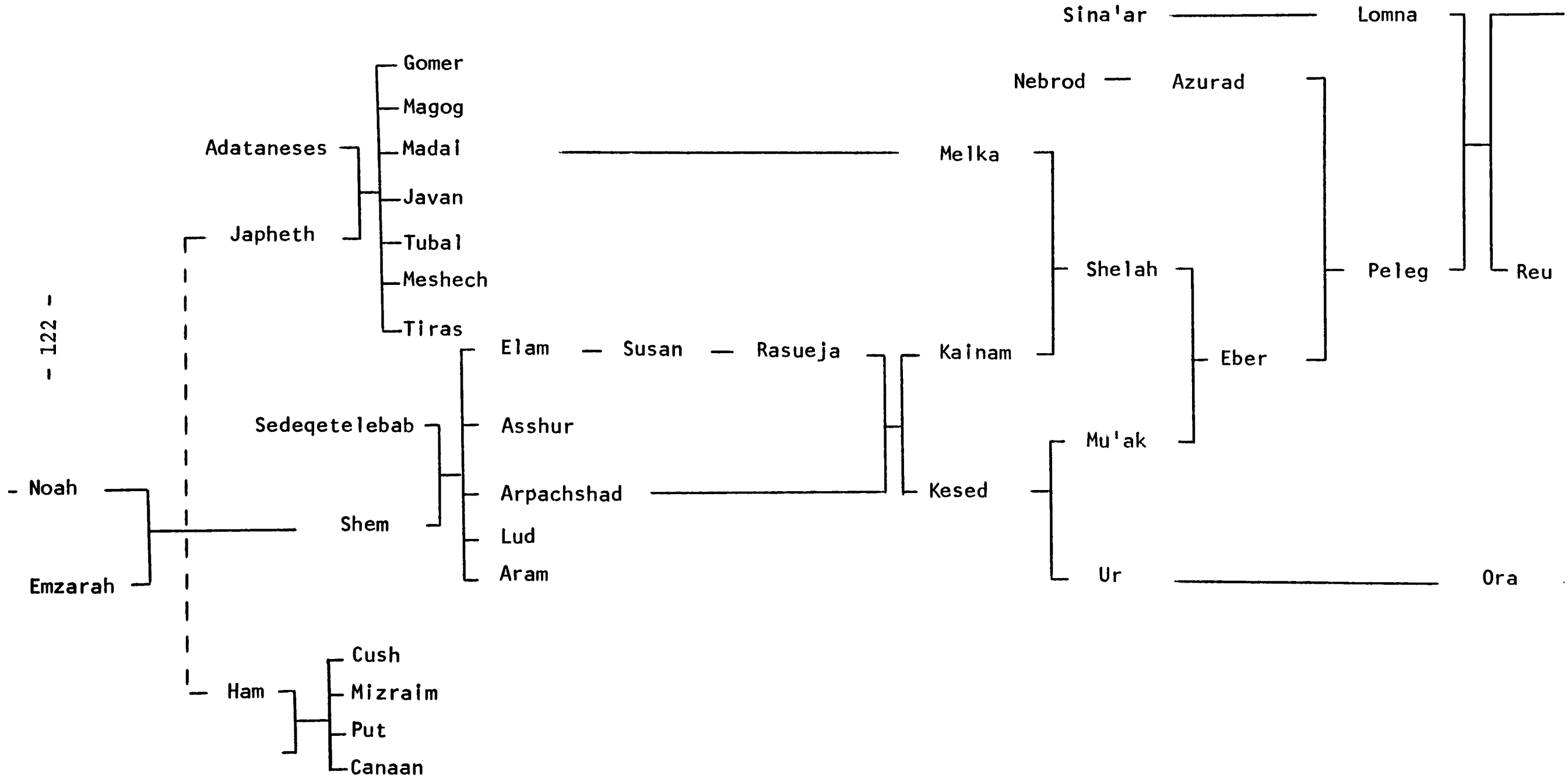

Table 3

FROM REU TO ABRAHAM (Ethiopic)

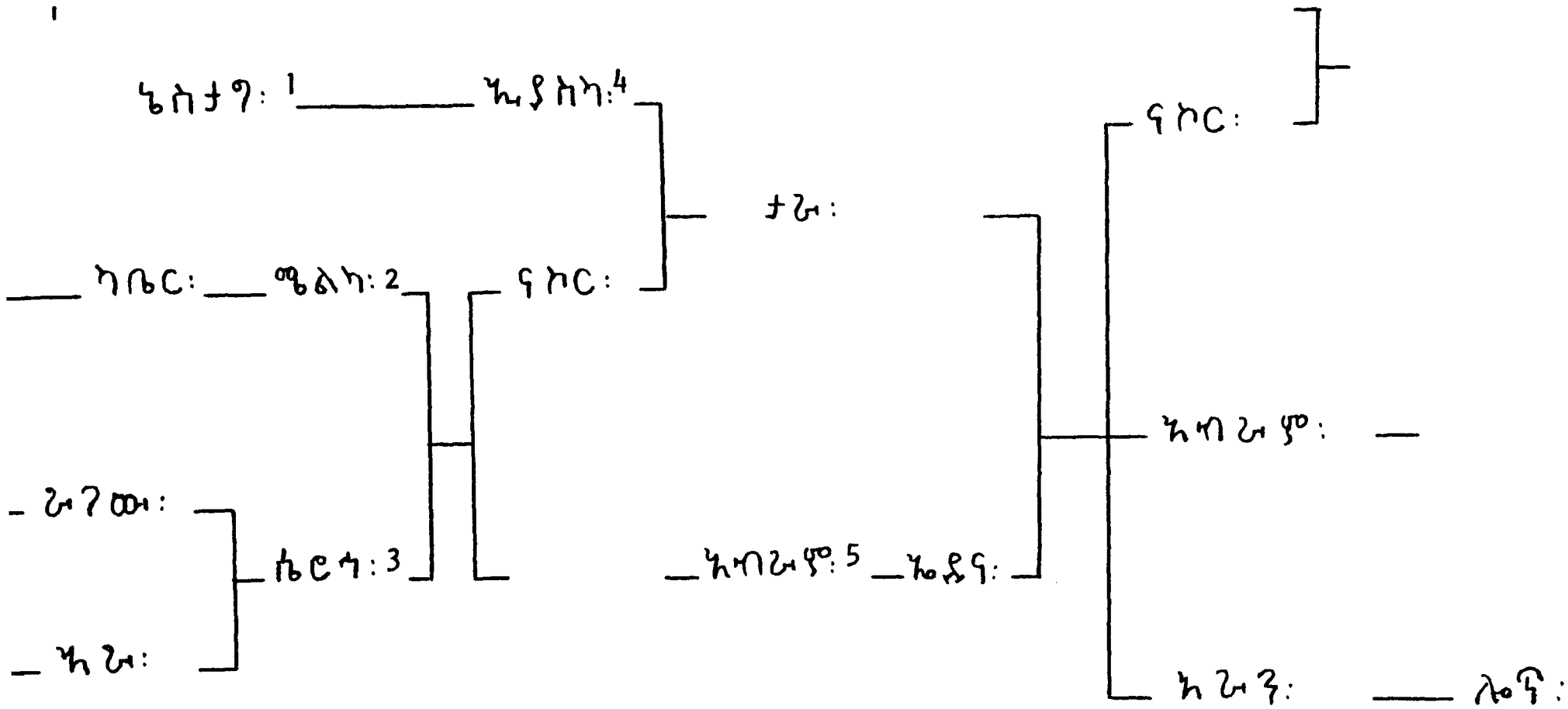

1 MS A ሄስተግ:
2 MS B ማልካ:
3 MS B,C ሴጉግ:
4 MS A ኢያሰኮ:
5 MS B ኦሀራሄ:

Table 3a

FROM REU TO ABRAHAM (Transcription)

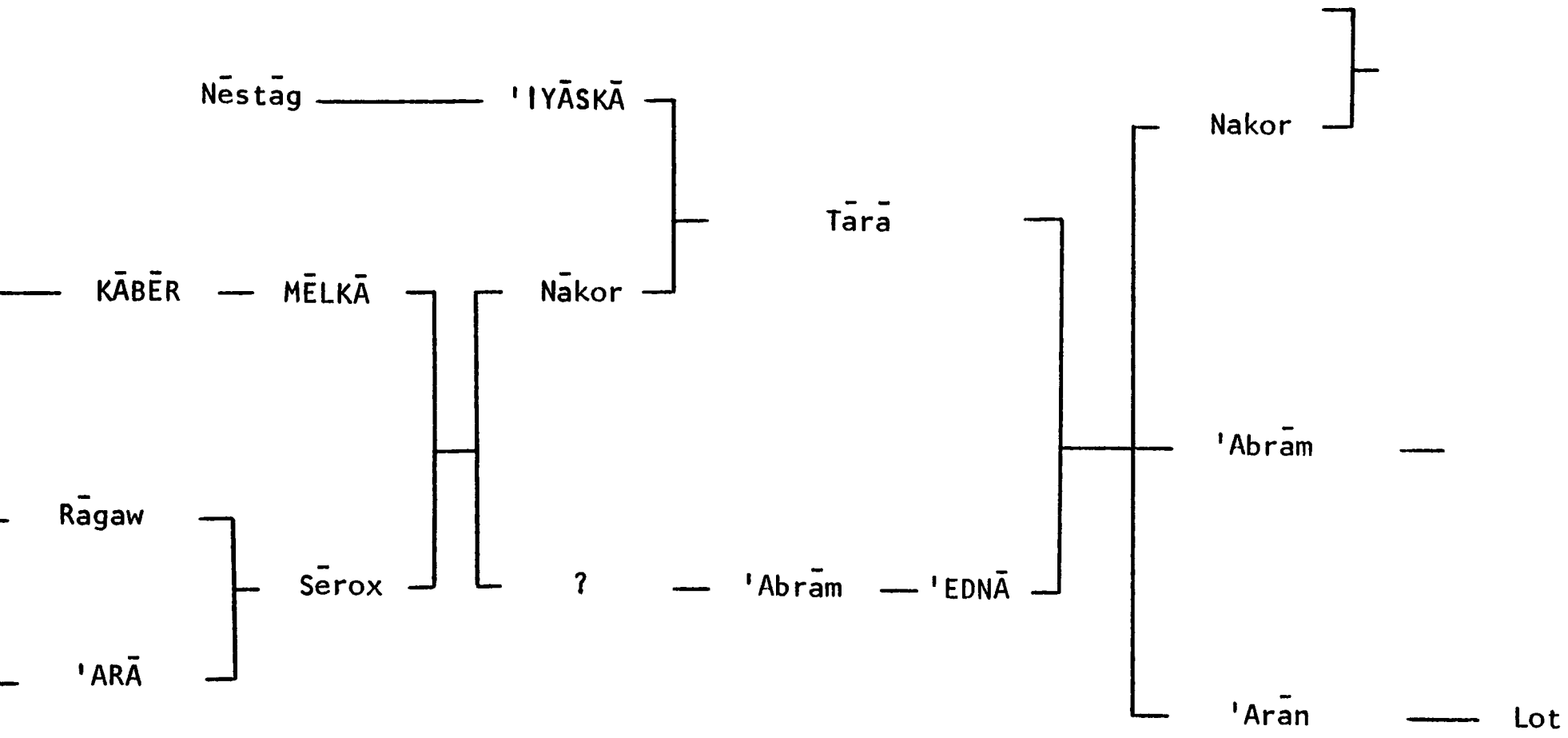

Table 3b

FROM REU TO ABRAHAM (Charles)

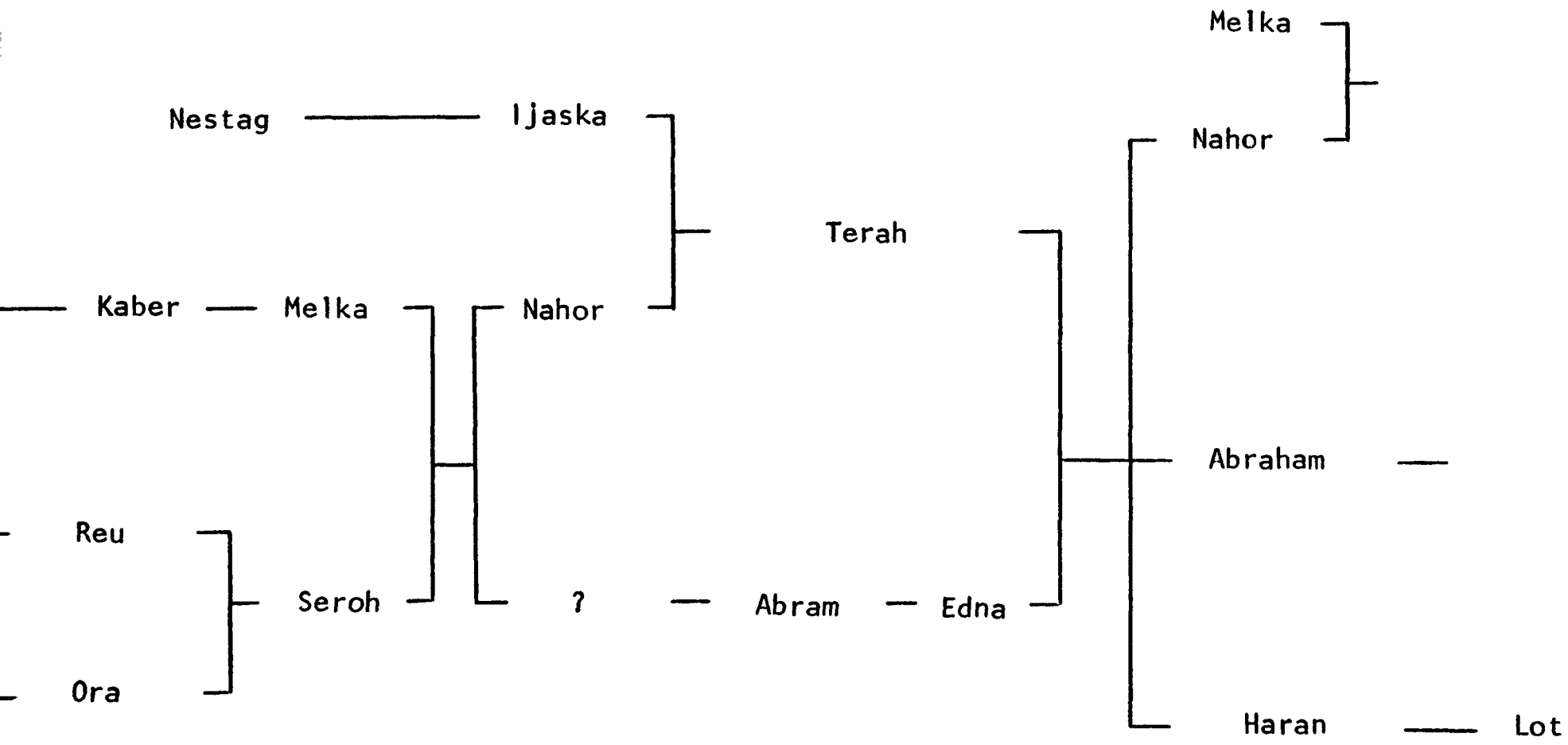

CHAPTER THREE

CHRONOLOGY IN JUBILEES

Perhaps the single most interesting feature found in Jubilees is the chronology that is built into the patriarchal narratives. The dates of events are not recorded in the same manner as Genesis, rather they are presented as an elaborate system of jubilees, weeks and years. It is known from Leviticus 25:8-12 that the biblical jubilee is the 50th year and the jubilee period is 49 years or seven times seven years. The author of Jubilees develops his system around the number seven while never defining in detail the structure of the system he is presenting. More will be said about the jubilee in Jubilees presently, but for the moment it should be understood that a 50-year system (as found in the Assumption of Moses) is foreign to our author. Wiesenberg[1] has suggested that the 50 chapters of the book are somehow related to the idea that the jubilee year is the 50th, but, as far as one can discern, the 50 chapters are the creation of Dillmann[2] and are not found in any of the Ethiopic manuscripts.

At the time of the writing of Jubilees there was much interest in ancient chronology. By this time other cultures had begun to develop an interest in their past and were recording ancient material in such a way so that the antiquity of their culture could be proven.[3] It is quite possible that the antiquity of the Jews was being challenged by the Greeks, who were dating their history in

exact Olympiads;[4] and so it was necessary for the Jews to move beyond the realm of genealogy and legend into the world of chronology. It should, however, be understood that exact chronology for this early period is impossible. Records were not kept which used some sort of datum point which could be coordinated with the Julian calendar by astonomical or other means. G.R. Driver is quite right when he says that "strict chronological accuracy was hardly possible before the introduction of the Julian calendar in 46 B.C. in Rome and the publication of the Ptolemaic 'canon of kings' c. A.D. 140 in Egypt...."[5] This presents considerable difficulty for anyone interested in the ancient material and who is examining their data with a modern scientific mind. Very often an impasse is reached in the search for a datum point.

Yet it should also be remembered that just because our modern scientific minds have difficulty with the numbers from antiquity it cannot be assumed that the author(s) of the numbers and their audience had the same difficulty. There is no reason to hold the ancient authors as suspect. Recent writers on biblical chronology have concluded that there is a theological scheme which is imposed upon the biblical narratives of the patriarchal period.[6] While this may be so, the original authors clearly, and with integrity, expect the numbers to be taken seriously.[7]

It is most fascinating that in the Hellenistic period when chronologies are being added to the sacred narratives in an attempt to show that one's culture is ancient, there is no attempt in the biblical accounts (MT, SP) or in works like Jubilees to synchronize

the dates of Jewish antiquity with those of the surrounding cultures.[8] It is known from the Greek historian Berossus that for the chronology of the earliest times the numbers are extremely large.[9] If the LXX translation was made in Alexandria sometime after the end of the third century B.C., the translator might be aware of the fact that Manetho, under Ptolemy II, produced a chronology of the Pharaohs who were supposed to have lived at least 1,000 years before the deluge.[10] The LXX translator, working with stock numbers, chose to increase them by 100 years in order to bring them in line with the Egyptian numbers. The Egyptian numbers are, of course, unreliable as accurate historical figures.[11]

It is into this environment that the author of Jubilees submits his work. The dates of antiquity are important and various traditions are being put forward to account for the antiquity of the early patriarchal narratives. It is possible that as late as the second century B.C. the numbers in the MT had not been finalized.[12] If this is true, then it is also possible that Jubilees is earlier than the final forms of MT or LXX. (It is uncertain when the numbers of SP were finalized. This will be discussed later.)[13]

It is a difficult question to ask in which order the chronologies arose.[14] It is possible that one of the lists, MT, LXX, SP or Jubilees is original, or that they all used a separate tradition, or that they are all variations of a single chronology. The question of the tradition of the numbers behind the chronology is one which needs examination, a question which the present chapter will address. The numbers of these four traditions will be compared

in an attempt to discover the relationship between them and Jubilees; is Jubilees, for example, directly dependent upon one of the lists, or is one of them dependent upon Jubilees, or are they all related in a way that can be determined?

The present discussion will commence with a comparison of these various traditions. We will look carefully for indications that there is borrowing and that there is a systematic plan being put forward by the authors. We will also consider whether the authors who used the earlier system were aware of the scheme or plan that the original author developed.

Finally, the discussion will be more specifically directed to the design within Jubilees itself. Here we will deal with some theorists who have worked with material from the same historical period as Jubilees, which should enable us to better understand the world-view of the author of Jubilees. In this section the meaning of the jubilee in Jubilees will be considered and the scope of the writer's system will be examined.

A. The Chronological Numbers of MT, LXX. SP and Jubilees Compared

There have been previous attempts to deal with the chronology of Jubilees. The first major consideration of the chronology was in a study by Ferdinand Bork in 1929[15] on the schema operating in Genesis as seen in the differences between the MT, SP and LXX

numbers. Bork was able, by simple comparison and subtraction of the numbers, to show that there was a system operating behind the lists. He isolated recurring numbers such as 365, 935, 1065 and 1430. These numbers, which recur periodically in all the lists, including Jubilees, suggested to Bork that a relationship existed between the chronological systems. He attempted to use this information to reconstruct a possible original chronology of ancient history. Although there have been many challenges recently to the type of methodology followed by Bork and more recently by Klein,[16] which attempts to find an original list behind those that exist presently,[17] the work of Bork is still significant because of the scheme that he discovered to be operating, which enabled him to view the chronologies as related in some way. The present chapter is not an attempt to find an original chronology, but rather it will examine design in the work in an attempt to determine how the design developed in Jubilees.

This can be stated another way. There are significant differences between the lists found in MT, SP, LXX and Jubilees. These lists all date from a similar period of history. Although there is no certainty about which list is earliest,[18] the present chapter will consider the list of Jubilees in relation to those of MT, LXX and SP in an attempt to learn more about the reason behind the Jubilees list.

Once the list of Jubilees has been firmly established, the direction of the thesis will shift towards an understanding of the over-all purpose of the chronology in the context of the patriarchal

narratives. Testuz[19] has already done some work in this area which will be examined, and in it he studied the chronology as it related to eras and messianism. His interest in the chronology was not like that of Bork, who wanted to develop an original list of patriarchal numbers; rather, Testuz goes beyond the patriarchal narratives of Jubilees to consider the concern of the author for a new era which follows the era of the Testimony and the Law. This theory will be considered in detail, along with others, below.

a. The Style of Genesis and Jubilees Compared

The importance of chronology as a central interest for the biblical writers cannot be denied.[20] This is not untrue for Genesis. Many of the commentaries have some sort of chart showing the different numbers for Genesis 5 and 11 in the MT, SP, and LXX;[21] yet the actual relation between MT, SP and LXX is still considered to be unclear. It has been common to view the numbers as post-exilic expressions of round numbers where, for example, the date for the Temple can be calculated as 3001 AM,[22] or as a reference to a 4000 year Babylonian Great Year.[23] None of this can be proved. Nowhere in Genesis are the numbers "added up" so that they might be used for a chronographic calculation. It could be that such was the intention of the final Genesis redactor but if it was, such a system must work out exactly. A discrepancy of a year or two would not be accurate enough if an artificial calculation were used. The same

caution must be made when discussing the chronological scheme operating between the Old Testament systems and Jubilees. Only if exact number parallels and relationships are operating can any claim be made that one has discovered a functioning system.

It is at once obvious to one familiar with Genesis 5 and 11 that the chronology of Jubilees is somewhat similar. Yet there are many important differences. While Genesis 5 and 11 are stereotyped structures almost void of narrative comments, in Jubilees the chronology is surrounded by the narrative. The Jubilees material must be extracted from the narrative if a list similar to that of Genesis is to be drawn. The different forms in which the patriarchal material is presented must affect its function.

In Genesis 5, the relationships are all kin. The pattern

A was x years old when he became the father of B
A lived after the birth of B "n" years
The total days of A were "n^1" years
And he died[24]

is deviated from in only three instances. These are Gen 5:3, 22-24 and 27. Gen 5:3 includes a naming statement ויקרא את שמו שת. Gen 5:22-24 is radically different as Enoch does not die. The years for his life-span are relatively short in comparison with the other antediluvian patriarchs. In the third deviation, Lamech has a son who is not immediately named, and there is also an additional narrative portion (Gen 5:27) which is not at all typical.

This structure is an easily recognizable pattern and elsewhere only in Gen 11:10ff does anything even remotely similar occur. The expression זה ספר תולדת אדם is thought to be an introductory statement by most commentators and it has been considered as a separate book, the

earliest part of the Priestly document.[25] The section which comprises Genesis 5 is a linear genealogy, branching into a segmented genealogy after Noah, a pattern which is identical with the genealogy of chapter 4.[26] It is a simple segmented genealogy, moving from father to son, and can be diagrammed thus:

Figure 1

Simple Segmented Genealogy of Genesis 5

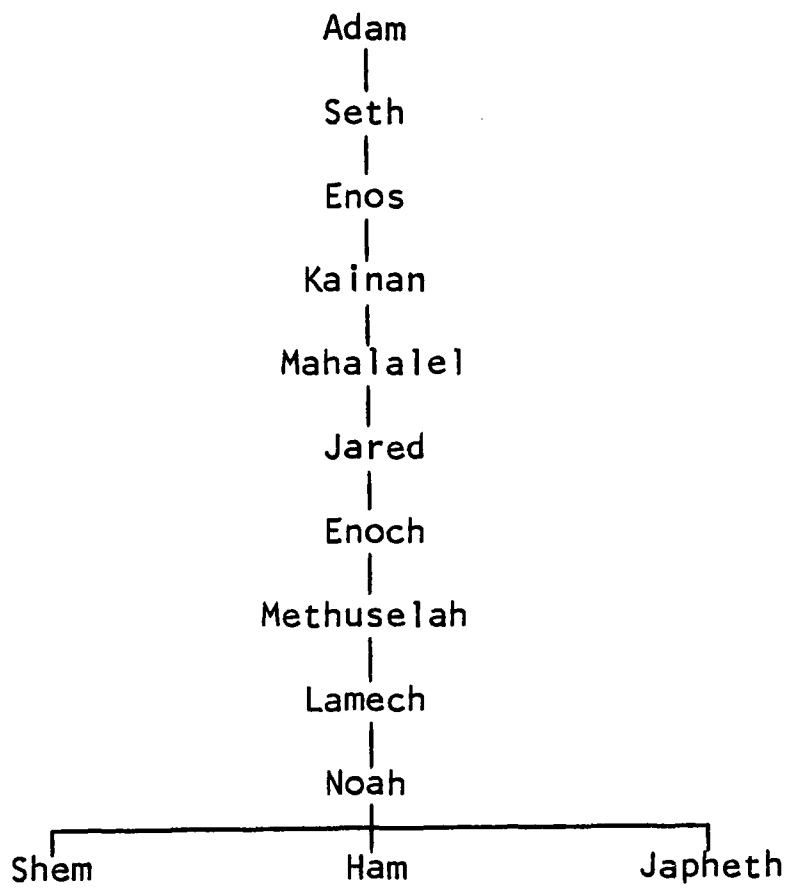

It has already been stated that the MT, SP and LXX numbers are different for the antediluvian period and that SP and Jubilees are very similar. R.W. Klein[27] has suggested that SP has adjusted the numbers of what he hypothesizes to be an original list so that all of the patriarchs except Noah die in the flood.[28] For our purposes it is significant to note that Klein suggests that SP is closest to the original

list. Jubilees is extremely close to SP. This means that only a few possibilities present themselves. Either Jubilees copied from the SP chronology, or Jubilees copied from an original list which SP also used. It may even be possible that Jubilees is the original list which was used by SP. If the reasons for particular changes can be determined, one should be able to discover which system is earlier which would aid in understanding the formation of both the biblical chronologies and also that of Jubilees.

When the chronological lists are presented in linear form as Klein has done, interesting relationships between the patriarchs themselves can be seen. In some of the ancient lists, pre-Noah patriarchs die in the flood. This can be determined as soon as chronological material is added to the genealogies. The significance of adding this information can be seen in the example (Figure 2) based on the MT below.

By using this table, one can discover that the addition of chronological material completely changes the outlook of a genealogy.

It is easy to see that Shem, Ham and Japheth spent exactly 100 years with Methuselah and 95 years with Lamech, who were themselves with Adam for 56 (Lamech) and 243 years (Methuselah) respectively. Noah could have known all but three of his direct ancestors from the original creation (Adam, Enoch and Seth) while his father Lamech, knew them all. This Sethite line from Adam to Noah, is only ten generations, but the large numbers shorten the line even further. Theoretically, according to the MT numbers, Noah could have talked to the grandson of Adam! Noah's father knew Adam himself. By adding chronological details to the genealogy a great deal of information is revealed which otherwise could not have been surmised.

Figure 2

MT Birth and Death Years of the Patriarchs

MT YEAR (AM)	BIRTH OF	DEATH OF
0	Adam	
130	Seth	
235	Enos	
325	Kenan	
395	Mahalalel	
460	Jared	
622	Enoch	
687	Methuselah	
874	Lamech	
930		Adam
987		Enoch
1042		Seth
1056	Noah (first man recorded as born after the death of Adam)	
1140		Enos
1235		Kenan
1300		Mahalalel
1462		Jared
1556	Shem Ham Japheth	
1651		Lamech
1656		Methuselah
2006		Noah

Similar relationships can be observed in the SP lists as we see in Figure 3. Once again, the list gives valuable information about "who knew who". Enoch is translated before the death of Adam. The most interesting changes are that besides Methuselah and Lamech, Shem, Ham and Japheth would also know Kenan, Mahalalel and Jared, and all of the patriarchs from Adam to Noah knew each other! Noah is born 170 years before the translation of Enoch and 223 years before the death of Adam.

Figure 3

SP Birth and Death Years of the Patriarchs

AM YEAR	BIRTH	DEATH
0	Adam	
130	Seth	
235	Enos	
325	Kanan	
395	Mahalalel	
460	Jared	
522	Enoch	
587	Methuselah	
654	Lamech	
707	Noah	
887		Enoch
930		Adam
1042		Seth
1140		Enos
1207	Shem, Ham, Japheth	
1235		Kanan
1290		Mahalalel
1307	Arpachshad	Jared, Methuselah, Lamech

The same information is not available from Jubilees as the death years of the patriarchs are not given. Only a partial table can be drawn.

Figure 4

Birth and Death Years in Jubilees

AM YEAR		BIRTH	DEATH
0		Adam	
130		Seth	
235		Enos	
325		Kenan	
395		Mahalalel	
461		Jared	
522		Enoch	
587		Methuselah	
652		Lamech	
707		Noah	
887			Enoch
930			Adam
1207		Shem, Ham, Japheth	
1307	(Flood)		
1659			Noah

Here we can see that Noah could have known Enoch and Adam but we cannot determine who was known to Shem, Ham and Japheth. There is no indication in the narrative that any of them died in or survived the flood.

It is at once quite clear that the styles of the Genesis lists and that of Jubilees are quite similar. It is also obvious from Figures 3 and 4 that there is a close correspondence between SP and Jubilees. In fact, for this early period, the SP and Jubilees lists are identical. This is not true for the numbers which follow the flood. Our attention will be directed to this period presently in an attempt to discover why the systems deviate from each other.

Another observation can be made on the basis of Figures 3 and 4 concerning the priority of Jubilees over SP. Jubilees is much less sophisticated as the death years are incomplete. Two solutions are possible. On the one hand, it is possible that Jubilees is earlier and SP, recognizing the problems that the lack of death years caused for the flood, added death years in order to solve this problem. On the other hand, it could be suggested that both SP and Jubilees are working from a common tradition and SP has added material to it while Jubilees has not. This question will be considered in more detail below.

b. Design in the Various Birth Relationship Traditions of the Patriarchs

Before the relationships of the Jubilees birth years are examined for evidence of design, the three main Genesis lists, those of the MT, LXX and SP, will be considered in order to discover the nature of their

interdependence. The birth dates of the patriarchs from Adam to Joseph will be used, as these parallel the Jubilees list. The method will be as follows. The numbers for a patriarch in each of the lists will in turn be subtracted from its corresponding number and the difference recorded. The numbers in this list will then be subtracted from themselves to produce a fourth column which will show any patterning that might be present. It will also show deviations from normal patterning. This column is the most significant for our purposes. It will be noticed that in each D of D (Difference of the Differences) column the first number is missing. This is because there is nothing to subtract Adam's difference from and so it must remain blank. This column will then be placed on a graph which will show how the lists relate to one another. The graphs can be interpreted as follows. If there is a horizontal line on the graph the lists are in relationship. If deviation from horizontal occurs, the lists are not in relationship and the deviation must be accounted for in some way.

Our study of the relationships begins with an examination of the MT and SP Birth Years.

i. MT and SP Patriarchal Birth Relationships

It is easily seen by examining the MT and SP lists in Figure 5 that many of the numbers for the antediluvian patriarchs are identical. However, from Noah to Joseph there seems to be no relationship between the numbers at all. By simple subtraction of the numbers, an interesting phenomenon can be seen, for the differences show a patterning, as the numbers 349, 249, 149, 49, -51, -151, -251, -301 occur. The MT numbers

Figure 5

MT-SP Birth Years

	NAME	MT	SP	DIFFERENCE	D OF D
1	Adam	0	0	0	
2	Seth	130	130	0	0
3	Enosh	235	235	0	0
4	Kenan	325	325	0	0
5	Mahalalel	395	395	0	0
6	Jared	460	460	0	0
7	Enoch	622	522	100	-100
8	Methuselah	687	587	100	0
9	Lamech	874	654	220	-120
10	Noah	1056	707	349	-129
11	Shem	1556	1207	349	0
12	Arpachshad[29] (Kenan II)	1656	1307	349	0
13	Shelah	1691	1442	249	100
14	Eber	1721	1572	149	100
15	Peleg	1755	1706	49	100
16	Reu	1785	1836	-51	100
17	Serug	1817	1968	-151	100
18	Nahor	1847	2098	-251	100
19	Terah	1876	2177	-301	50
20	Abraham	1946	2247	-301	0
21	Isaac	2046	2347	-301	0
22	Jacob	2106	2407	-301	0
23	Joseph	2196	2497	-301	0

for Noah, Shem and Arpachshad are 349 more than the SP numbers. The MT number for Shelah is 249 more than the SP number, and so on. The D of D chart expresses this relationship.

Figure 6

D of D for MT and SP

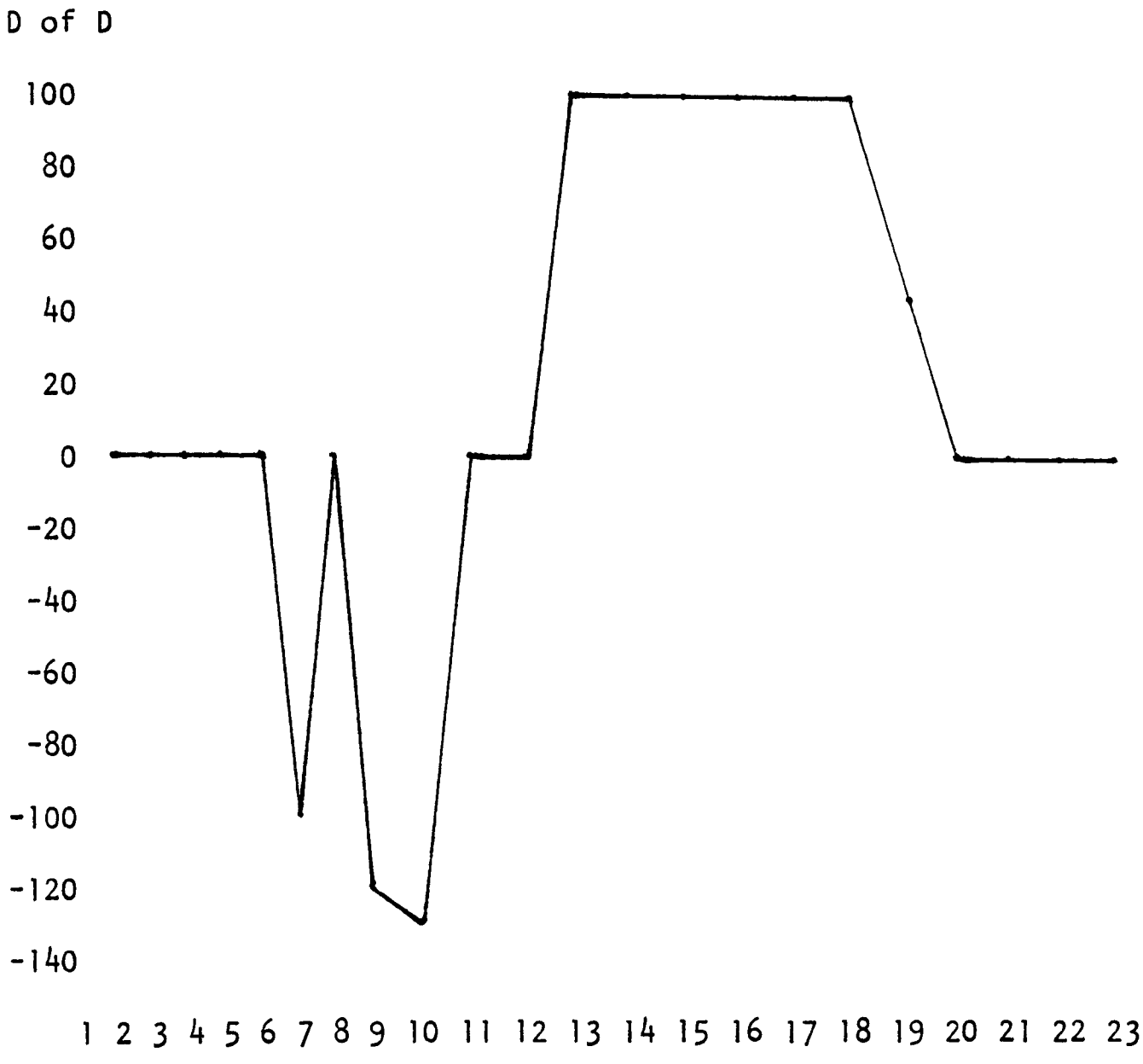

Here it is easily seen that from Adam to Jared, from Shelah to Nahor and from Abraham to Joseph the numbers of the MT and SP are in direct relationship. However, from Enoch to Noah there is considerable deviation from the norm. We know from the SP death years that the SP editor had considerable difficulty with the flood tradition, and this is expressed in the birth years as well. What is most interesting here is the close relationship not only between the first five patriarchal numbers, but also among those from Noah to Joseph. One of these systems has been elaborately developed from the other.

ii. MT and LXX Patriarchal Birth Relationships

Figure 7

MT - LXX Birth Years

	NAME	MT	LXX	DIFFERENCE	D OF D
1	Adam	0	0	0	
2	Seth	130	230	-100	0
3	Enosh	235	435	-200	100
4	Kenan	325	625	-300	100
5	Mahalalel	395	795	-400	100
6	Jared	460	960	-500	100
7	Enoch	622	1122	-500	0
8	Methuselah	687	1287	-600	100
9	Lamech	874	1454	-580	-20
10	Noah	1056	1642	-586	6
11	Shem	1556	2142	-586	0
12	Arpachshad	1656	2242	-586	0
13	Kenan II		2377		
14	Shelah	1691	2507	-816	
15	Eber	1721	2637	-916	100
16	Peleg	1755	2771	-1016	100
17	Reu	1785	2901	-1116	100
18	Serug	1817	3033	-1216	100
19	Nahor	1847	3163	-1316	100
20	Terah	1876	3242	-1366	50
21	Abraham	1946	3312	-1366	0
22	Isaac	2046	3412	-1366	0
23	Jacob	2106	3472	-1366	0
24	Joseph	2196	3562	-1366	0

As with the MT and SP relationships, here in the MT and LXX

lists after the first few patriarchs there seems to be little correlation between the numbers. The D of D column of Figure 7 and the following graph (Figure 8) show that the numbers are in fact interconnected.

Figure 8

D of D for MT and LXX

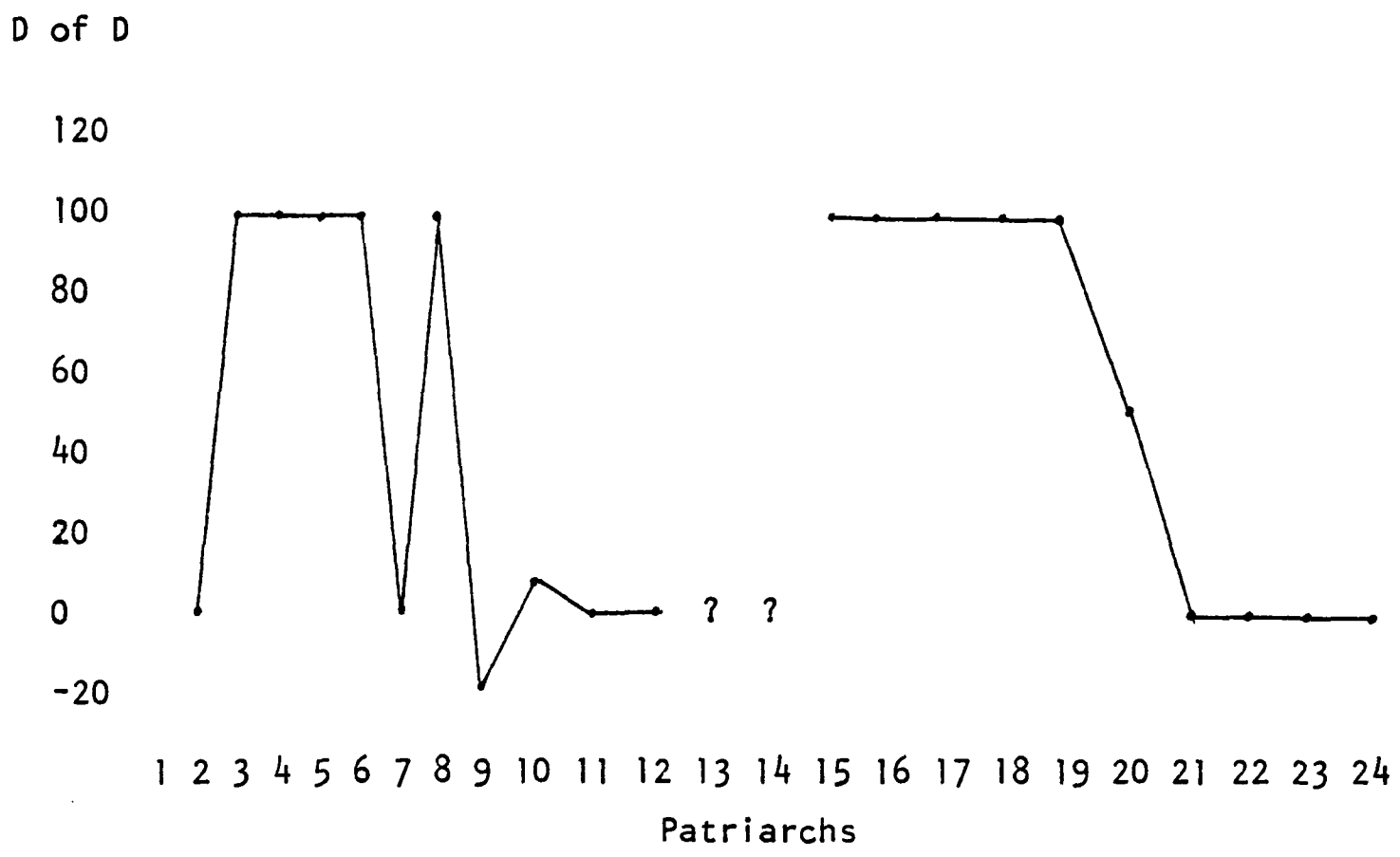

In Figure 8 the addition of Kenan II presents a minor problem, but it is still quite clear that the LXX deviates from the MT at precisely the same point as does the SP. This should mean that the SP and LXX are considerably close. They are charted below.

iii. LXX and SP Patriarchal Birth Relationships

Figure 9

LXX and SP Birth Years

	NAME	LXX	SP	DIFFERENCE	D OF D
1	Adam	0	0	0	
2	Seth	230	130	100	100
3	Enosh	435	235	200	100
4	Kenan	625	325	300	100
5	Mahalalel	795	395	400	100
6	Jared	960	460	500	100
7	Enoch	1122	522	600	100
8	Methuselah	1287	587	700	100
9	Lamech	1454	654	800	100
10	Noah	1642	707	935	135
11	Shem	2142	1207	935	0
12	Arpachshad	2242	1307	935	0
13	Kenan II	2377		-	?
14	Shelah	2507	1442	1065	?
15	Eber	2637	1572	1065	0
16	Peleg	2771	1706	1065	0
17	Reu	2901	1836	1065	0
18	Serug	3033	1968	1065	0
19	Nahor	3163	2098	1065	0
20	Terah	3242	2177	1065	0
21	Abraham	3312	2247	1065	0
22	Isaac	3412	2347	1065	0
23	Jacob	3472	2407	1065	0
24	Joseph	3562	2497	1065	0

Figure 10 shows the similarity between SP and LXX. There is a deviation at Noah and if the SP had Kenan II in its list there would

be a deviation there as well as there is a difference of 130 between Arpachshad and Shelah.

Figure 10

D of D for LXX and SP

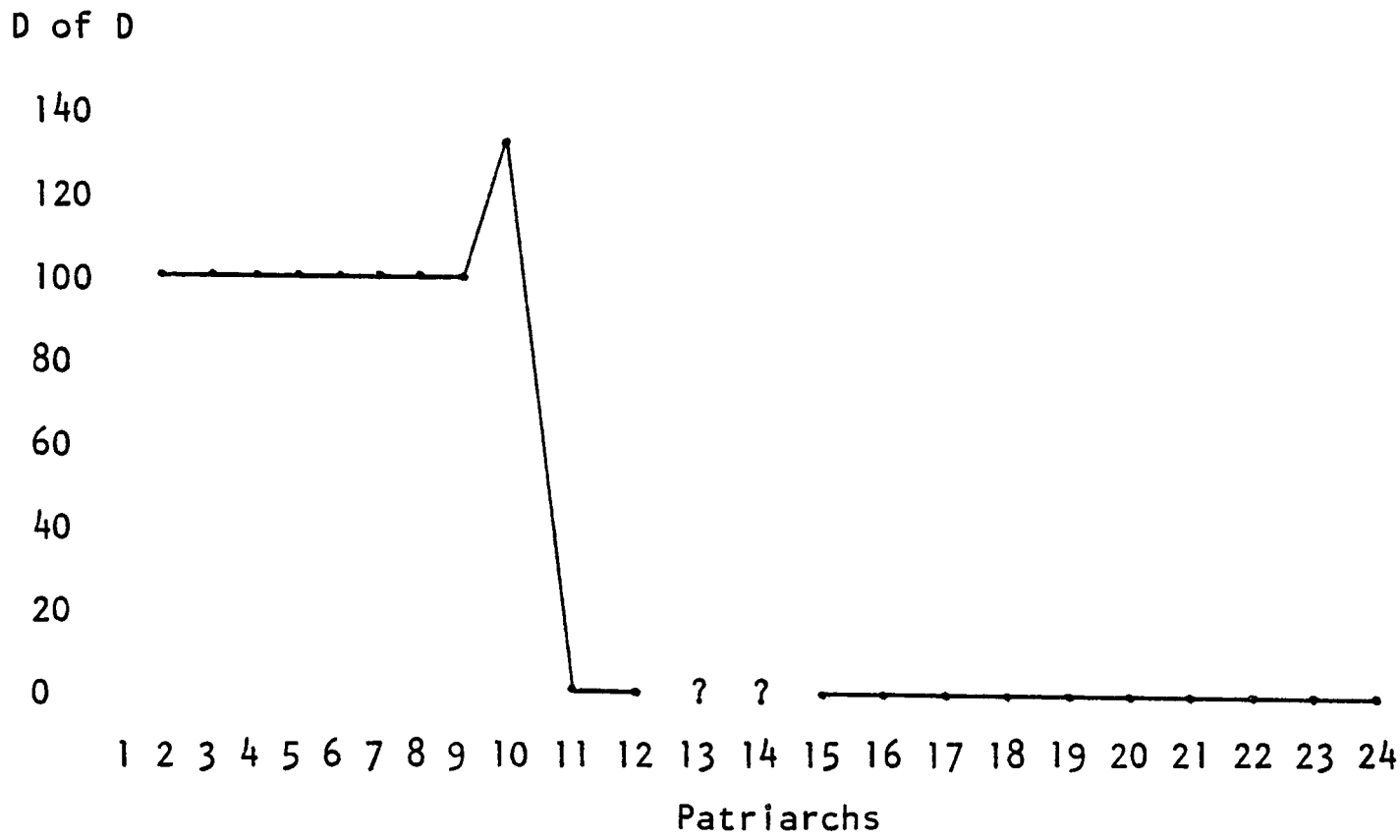

As can be easily seen from Figure 10, it is not the differences of 935 and 1065 which are significant, as Bork thought,[30] but it is the D of D column. This means that one of these lists is directly dependent upon the other. It can now be suggested that the SP is, in fact, the earlier list. To the SP chronology, the LXX translator, who was increasing the numbers because of influences which have been discussed above, added to the numbers by exactly 100 down to the flood, and then by a fixed amount (1065) from the flood to Abraham. Kenan II is also added from a tradition known to the author of LXX which lengthens the list even further.

Figure 7 shows that there is little relationship between MT and LXX and any similarities can be accounted for by their common relationship to SP. In Figure 5, the D of D column shows a clear pattern between MT and SP. The confusion at the time of Lamech in the MT list can be accounted for by noticing that the MT redactor of Genesis 5 was influenced by the poem about Lamech in Genesis 4. Numbers were adjusted accordingly so that all before Noah die in or before the flood. It seems to be that SP is earlier and is used by MT and LXX.

The purpose of the present discussion was to understand the relationships between the Genesis lists before comparing them to the Jubilees list. The question we hope to answer is whether the author of Jubilees was dependent upon a particular Genesis list or if his design is independent of them. From the previous charts there can be no doubt that the Genesis chronologies are schematic. We now turn to Jubilees in order to determine if the same is true in that work.

c. Design in the Birth Years of the Jubilees Patriarchs

Because the MT, LXX and SP numbers are all in relation for the first and last few patriarchs, we should expect that, no matter which list Jubilees is compared with, there should be similarities shown between these patriarchs. This is the case. Also, since it has been shown that the main differences between SP and LXX occur at Noah and Kenan II, deviations in Jubilees at this point will also be significant. We will begin our discussion of the relationship of Jubilees to the Genesis list by examining the Jubilees numbers and the MT.

i. Jubilees and MT Patriarchal Birth Years

Figure 11

Jubilees-MT Birth Years

	NAME	MT	Jub	DIFFERENCE	D OF D
1	Adam	0	0	0	
2	Seth	130	130	0	0
3	Enosh	235	235	0	0
4	Kenan	325	325	0	0
5	Mahalalel	395	395	0	0
6	Jared	460	461	-1	-1
7	Enoch	622	522	100	99
8	Methuselah	687	587	100	0
9	Lamech	874	652	222	122
10	Noah	1056	707	349	127
11	Shem	1556	1207	349	0
12	Arpachshad	1656	1307	349	0
13	Kenan II	-	1375		
14	Shelah	1681	1432	249	
15	Eber	1721	1503	218	31
16	Peleg	1755	1567	188	30
17	Reu	1785	1579	206	-18
18	Serug	1817	1687	130	76
19	Nahor	1847	1744	103	27
20	Terah	1876	1812	64	39
21	Abraham	1946	1882	64	0
22	Isaac	2046	1982	64	0
23	Jacob	2106	2042	64	0
24	Joseph	2196	2132	64	0

In Figure 12, which graphs the D of D column from Figure 11, it is easily seen that the relationship between Jubilees and the MT is

not close. It is highly unlikely that Jubilees used the MT numbers or vice versa and none of the numbers in the Difference or D of D columns appear to be significant.

Figure 12

D of D for Jubilees-MT

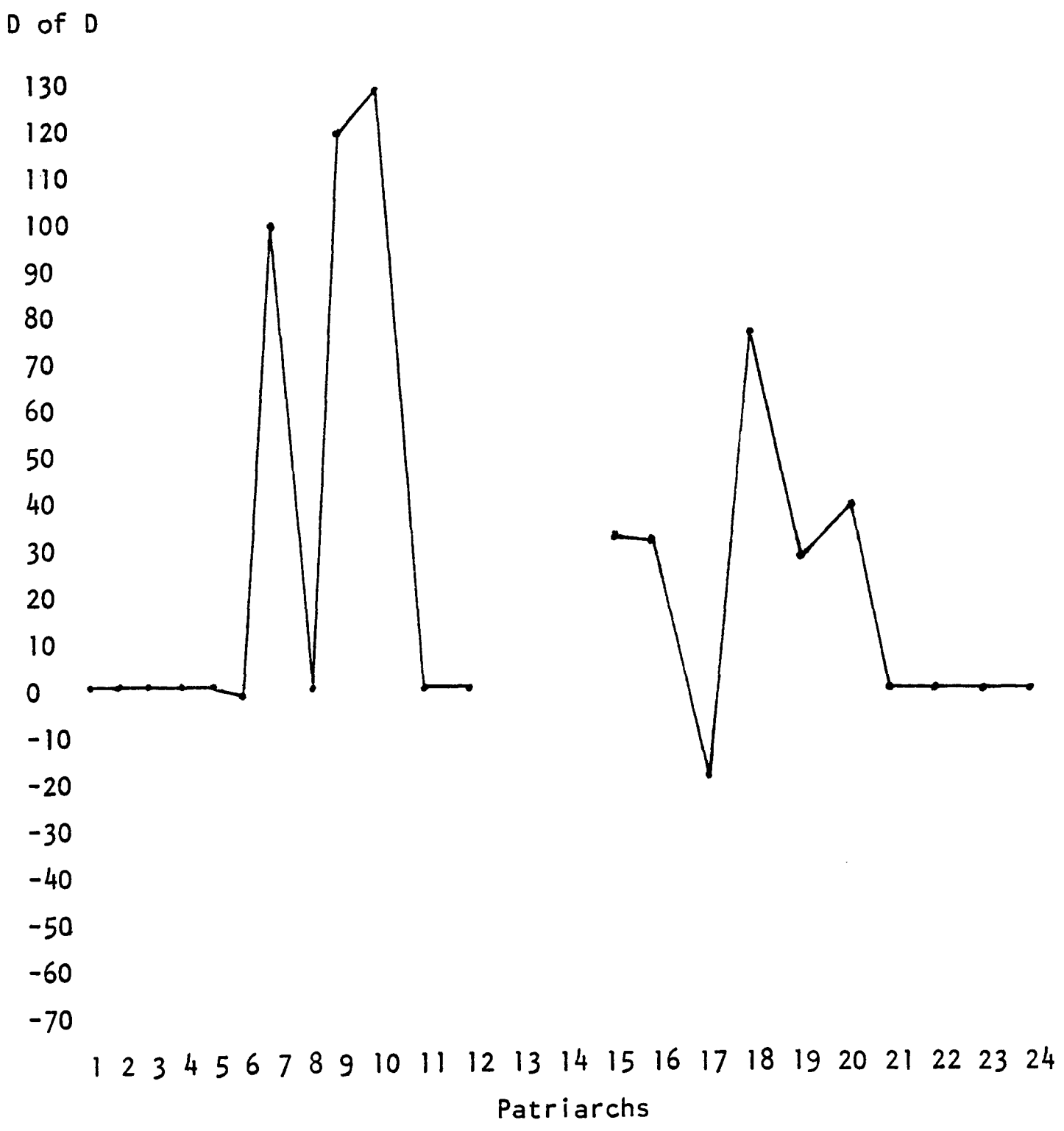

Deviations occur in Figure 12 between numbers 6 and 20. Only those numbers which are related in MT, SP and LXX are not deviant.

ii. LXX and Jubilees Patriarchal Birth Years

In both Jubilees and the LXX Kenan II is found in position 13. Charles[31] concludes that this tradition is not ancient and the reason for its addition is due to the reference in Jub 2:23 that there are 22 patriarchs from Adam to Jacob. While Charles is right that an additional name is needed if Jacob is to be the twenty-second generation in the lineage of Adam, it seems doubtful if either the LXX or Jubilees has originated this tradition. While Jubilees and LXX have some similarities, it will be seen below that Jubilees is much closer to the SP list. It seems likely then that the tradition which includes Kenan II is earlier than either the LXX or Jubilees.

Once again, while there seems to be no relationship between the numbers in columns one and two, in columns three and four some patterning is evident. There is deviation between Noah and Terah which is clear in the graph, Figure 14. Any patterning can be explained on the basis of their proximity to SP. It can therefore be concluded that neither Jubilees nor LXX is dependent upon the other.

It has already been shown in Figure 10 that the first 12 patriarchs in LXX-SP fit a pattern identical to that of LXX-Jubilees. We can guess that Jubilees will be identical to the SP at least for these 12 patriarchs. We will now look for any further similarities which might suggest the SP and not the LXX or MT as the tradition which Jubilees most closely approximates.

Figure 13

Jubilees-LXX Birth Years

	NAME	LXX	JUB	DIFFERENCE	D OF D
1	Adam	0	0	0	
2	Seth	230	130	100	-100
3	Enosh	435	235	200	-100
4	Kenan	625	325	300	-100
5	Mahalalel	795	395	400	-100
6	Jared	960	461	499	-99
7	Enoch	1122	522	600	-101
8	Methuselah	1287	587	700	-100
9	Lamech	1454	652	802	-102
10	Noah	1642	707	935	-133
11	Shem	2142	1207	935	0
12	Arpachshad	2242	1307?	935	0
13	Kenan II	2377	1375	1002	-67
14	Shelah	2507	1432	1075	-73
15	Eber	2637	1503	1134	-59
16	Peleg	2771	1567	1204	-70
17	Reu	2901	1579	1322	-118
18	Serug	3033	1687	1346	-24
19	Nahor	3163	1744	1419	-73
20	Terah	3242	1806	1436	-17
21	Abraham	3312	1882	1430	6
22	Isaac	3412	1982	1430	0
23	Jacob	3472	2042	1430	0
24	Joseph	3562	2132	1430	0

Figure 14

D of D for Jubilees-LXX

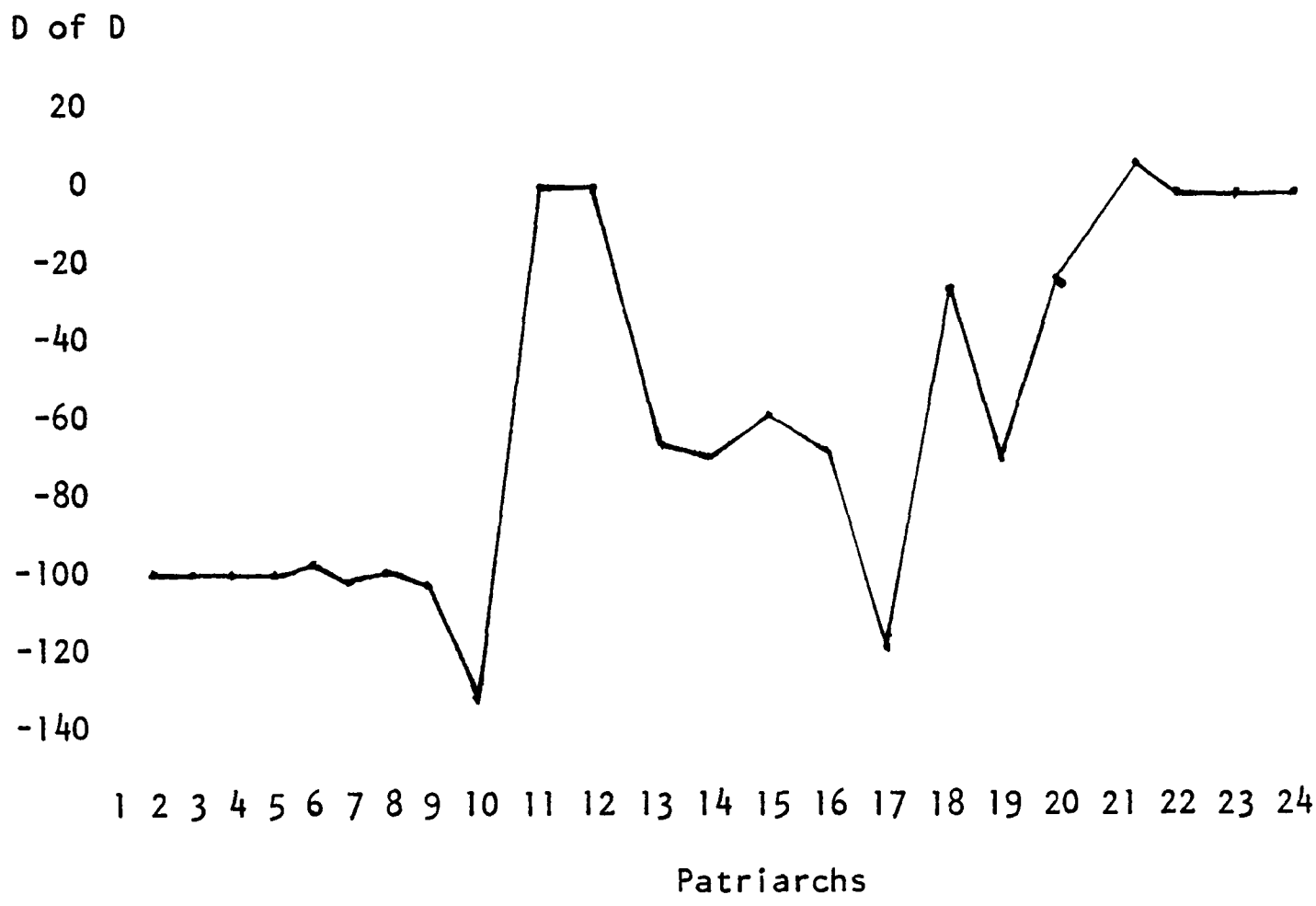

iii. SP and Jubilees Patriarchal Birth Years

In Figures 13 and 15 a few minor differences in the numbers can be seen. At Jub 4:15 the birth of Jared is in the year 461AM.[32] The slight discrepancy which this causes is hardly noticed in the graphs. In fact, the deviation is only .5. If such a discrepancy were merely the product of a scribal error the charts would work out even better. It should also be noted that Lamech is 462 in Jubilees and 460 in SP.[33]

The birthdate for Jacob is more difficult as there is a textual discrepancy within Jubilees itself. At Jub 19:13, Jacob is born in the year 2046AM. This date is in agreement with Jub 25:4 where Jacob is 63 years old in the year 2109AM, placing his birth in the year 2046AM. However, when Jacob dies at the age of 147, he dies in the year 2188AM. By calculation this would make his birth in the year 2041AM. The Latin agrees with this number at Jub 45:13. I suspect that the number 2046AM is an error that crept into the text on the basis of the MT date for the birth of Isaac which is 2046AM in that tradition. Thus 2041AM is closest to the original number of Jubilees. This number will be used in our calculations with one exception. When a particular structure is examined that relates specifically to the SP system, this number will be emended in that instance to 2042AM. The reason will become clear below.

One of the most difficult numbers to determine in either the biblical account or in Jubilees is the birth of Abraham. In Jub 23:8 it is recorded that Abraham is 175 when he dies. Jub 22:1 places his death in the 44th jubilee, first week, second year or 2109AM. In his 1902 work, Charles incorrectly read this as 2116AM and emended the number to read 2051AM. This is the number which appears in his 1913 edition of the Apocrypha and Pseudepigrapha and it was accepted by Wiesenberg.[34] The emendation places the birth of Abraham in 2051AM-175=1876AM. Charles' emendation now agrees with MT for the birthdate of Terah.

If 2109AM were considered as the date for the death of Abraham it would soon be discovered that it is impossible. This would make his birth fall in the year 2109AM-175=1934AM. However, at Jub 14:24, Abraham is 86 in 1965AM which would place his birth in 1965AM-86=1879AM.

Charles arrived at 2051AM by calculation. Jub 11:15 places the birth of Abraham in the year 1876AM. To this date Charles added 175 years for the life-span of Abraham bringing his death to 2051AM. This causes other dates in Jubilees to be in error. Accepting 2051AM for the death of Abraham, it is now necessary for Charles to adjust Jubilees 20:1 to read 2045AM instead of 2052AM for it is impossible for Abraham to speak to his sons in 2052AM if he has died the year before! Charles also adjusts Jub 22:1 to read 2051AM for the death of Abraham when the Ethiopic reads 2109AM. It appears as though Charles has emended the numbers to fall into agreement with MT.

However, Jub 21:1 for the date of the death of Abraham is 2057AM. Charles, as is expected, has emended the date to read 2050AM. He places this date in brackets with a question mark as Abraham cannot speak in 2057AM if he has died in 2051AM. If the reading in Jub 21:1 is accepted, by subtracting 175 years from this date for the life-span of Abraham, we arrive at 1882AM for the birth of Abraham.

This internal discrepancy found in Jubilees for the dates of Abraham is extremely difficult to sort out. Charles has solved the puzzle in a similar way to that which he used in solving the birthdate of Jacob. His calculation there correlated the birthdate of Jacob in Jubilees with the father of Jacob in the MT. Here with Abraham, Charles finds that the birthdate of Abraham in Jubilees by calculation is identical to that of his father Terah in MT, 1876AM. He adjusts other dates accordingly.

The solution proposed by the present writer to this perplexing situation is as follows. There is no need to emend any of the numbers.

Rather, each number can be observed as having a purpose in its original tradition. The 1876AM of Jub 11:15 is related to the MT tradition. The 1882AM calculated from Jub 21:1 is related to the SP tradition. This needs an explanation.

The SP numbers for Abraham, Isaac, Jacob and Joseph are 2247, 2347, 2407 and 2497. One immediately suspects a scheme. If the Jubilees numbers are compared, using Abraham as 1882AM, a similar patterning is observed. The numbers are 1882, 1982, 2042 (sic), and 2132. If the Jubilees number is subtracted from the SP number for each patriarch, the dividend in every instance is 365. This is very close to the number of days in an actual solar year. The difference for Nahor is also significant for it is the same as the number of days in a lunar year: 354.

It is possible, then, that if the discrepancies which at first seem irreconcilable for the birth of Abraham are considered in relation to the SP numbers, sense can be made of both 1876AM and 1882AM as birth dates. What is of extreme importance for Jubilees is that the differences relate to the true solar year which should not be expected. Rather, one might have thought that the dividends would be 364.

This situation confirms the conclusion of VanderKam[35] that, on the basis of careful textual examination, there is a close relationship between the texts of SP and Jubilees. VanderKam[36] also is correct when he states that the author of Jubilees never quotes a biblical text directly when dealing with the chronology but rather he uses an awkward system of jubilees, weeks, years and a calendar of 364 days.

Figure 15

Jubilees-SP Birth Years

	NAME	SP	JUB	DIFFERENCE	D OF D
1	Adam	0	0	0	
2	Seth	130	130	0	0
3	Enosh	235	235	0	0
4	Kenan	325	325	0	0
5	Mahalalel	395	395	0	0
6	Jared	460	461	-1	-1
7	Enoch	522	522	0	1
8	Methuselah	587	587	0	0
9	Lamech	654	652	2	-2
10	Noah	707	707	0	2
11	Shem	1207	1207	0	0
12	Arpachshad	1307	1307	0	0
13	Kenan II	1375?	1375	0?	0?
14	Shelah	1442	1442(1432)	0	0?
15	Eber	1572	1503	69	-69
16	Peleg	1706	1567	139	-70
17	Reu	1836	1579	257	-118
18	Serug	1968	1687	281	-24
19	Nahor	2098	1744	354	-73
20	Terah	2177	1806	371	-17
21	Abraham	2247	1876(1882)	371(365)	0(6)
22	Isaac	2347	1982	365	-6(0)
23	Jacob	2407	2041(2042)	366(365)	-1(0)
24	Joseph	2497	2132	365	1(0)

When the awkward system of Jubilees is converted into dates from creation, the proximity to SP is seen at once.[37]

Figure 16

D of D for Jubilees-SP

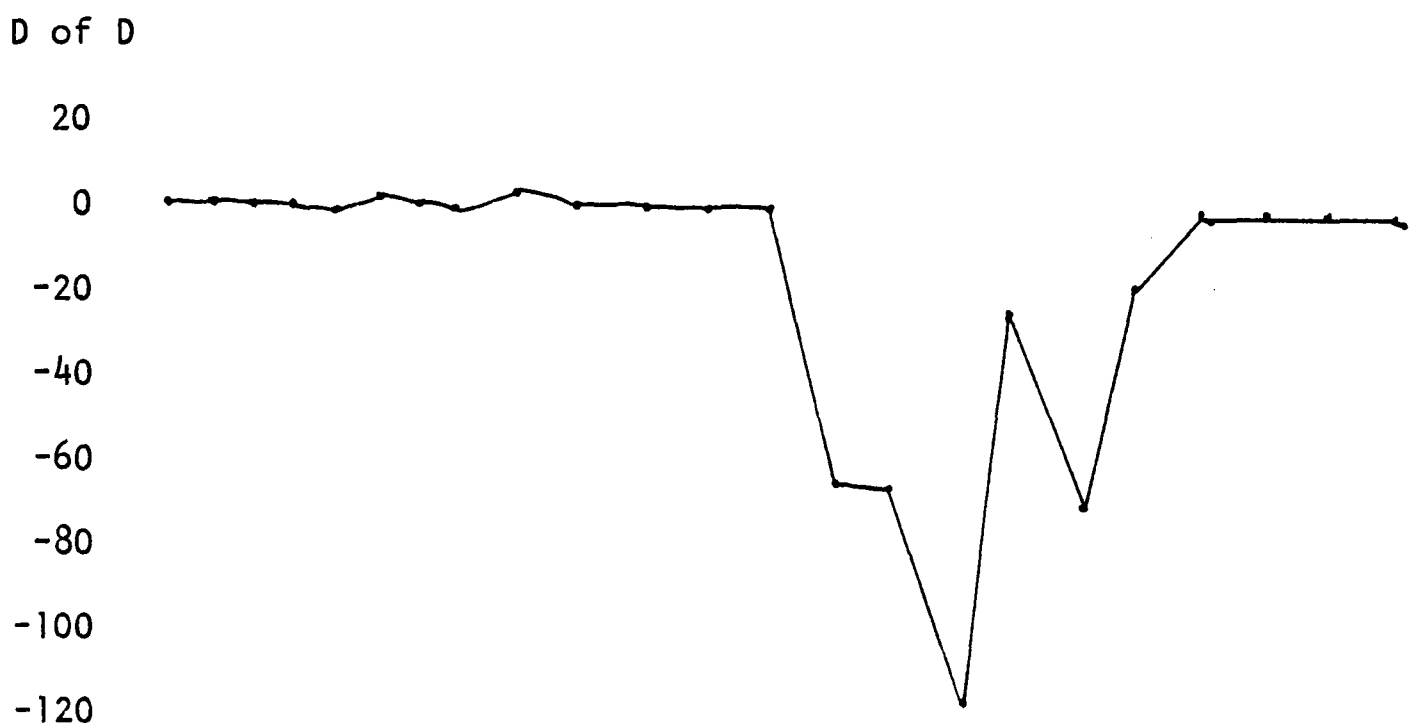

These number differences between SP and Jubilees might hardly seem to be significant if the narrative of Jubilees were unknown. However, the number for Nahor is 354, the number of days in a lunar year. Nahor, it is said (Jub 11:8), is taught to divine and augur according to the signs of the heavens. Abraham, whose number difference between SP and Jubilees is 365, turns from the practice of determining the character of the year with regard to the rains (Jub 12:16) and leaves such things in the hand of God (Jub 12: 17-18). It is after this that he receives his blessing of seed

and divine welfare. And as in the period of the early patriarchs, Abraham marries his sister. At the moment in the narrative when the chronological difference between SP and Jubilees is 365, the genealogical pattern where the early patriarchs marry a sister, is reinstated.

In conclusion, it has been suggested that Jubilees has used the chronology of SP and has adapted it to fit his narrative purpose. And what is most interesting and quite inexplicable is that the differences approximate the lunar and solar year, not the sabbatical 364-day year used in calendrical calculations by our author.

B. Theories of Design in History

It was concluded in the previous section that the chronology of SP antedates MT, LXX and Jubilees. However, while the chronology of Jubilees is later than SP, it seems to be less developed in some respects. Dates for the deaths of patriarchs are missing, there are discrepancies in some of the numbers such as the birth of Abraham, and the use of jubilees, weeks and years makes calculations difficult.[38] It seems reasonable in light of this initial observation to examine the system of Jubilees to determine if it is an unsophisticated design. The discussion will consider the work of some design theorists, will investigate the jubilee of Jubilees and will then make some further observations about the overall

design of the chronology.

a. Previous Attempts at a Solution

As might be expected, relatively few scholars have examined the design in the chronological system of Jubilees. The most significant theorists are considered below. The first two, Testuz and Davenport, deal mainly with Jubilees, while Grabbe uses Jubilees in the context of a discussion of Hellenistic Jewish historiography.

i. Testuz

In his seventh chapter entitled "Les temps derniers," Testuz suggests that the Jubilees author envisioned three world eras based on the jubilee system. The first is the era of the Testimony which includes the period from creation to Sinai. The period is characterized by the covenant between Noah and God which is renewed with Abraham, Isaac and Jacob and his children. This era lasts 49 jubilees.[39]

The second era is that of the Law, marked by the revelation on Sinai and characterized by the teaching of the Law. Testuz admits that we do not know the length of time for this era. He suggests an hypothesis, based on the number 22 (Jacob being the 22nd patriarch and the sabbath being the 22nd act of creation) that the era might last 22 jubilees or over 1029 years.[40] Testuz himself,[41] and Davenport[42] in his discussion of the point, can see no significance in the suggestion that the final (also called the third or messianic) era commences *after* the passing of

21 jubilees or at the commencement of the 22nd jubilee. There are of course difficulties with the historical point in the post-biblical period to which the argument refers due to the inexactness of chronological references in general during this period of history. (The argument of the Jubilees author may in fact be more dependent upon the generalized period of history rather than on a specific date.) If the entrance into Canaan in 2450AM is 21 jubilees from the Messianic era, then this era begins at (2450AM+1029) 3479AM. If one uses numbers from the MT, by a simple calculation 3479AM corresponds roughly to 427BC, in the Persian period.[43]

There are some difficulties with this conclusion. First, scholars are now fairly unanimous in the belief that Jubilees was written in the Maccabean era. The Messianic or final age in Jubilees is future and not either past or present. Our author may have been working with a very different date for the exodus than that found in the MT, which could give an entirely different calculation; but there is no way to determine if a different calculation is to be used. Thus, while the suggestion of Testuz is fascinating, his proposal that the second era lasts 21 jubilees is impracticable.

A second difficulty concerns the length of the era. Why should the second era be shorter than the first? And if it is shorter why does it last only 21 jubilees? Why does not an era end after 25 jubilees, or half way through a jubilee period? This would lower the date for the commencement of the new age from 427BC to circa 230BC. Or if the new age began at the commencement of the end of the mid-time[44] (after 29 jubilees) the date would be lowered to 36BC.

There is no evidence in Jubilees which requires us to accept any of the solutions mentioned above. A commentator does not have the right to leap from the significance of the number 22 or the idea of the mid-time to a distant chronological calculation. Any attempts at solving this puzzle are doomed to failure due to a lack of information in Jubilees itself.

ii. Davenport

The theory of Davenport on the scheme or design in history as found in Jubilees is based on the work of Testuz[45] but with a difference. For Testuz, Jub 50:4 refers to the time of Moses. For Davenport, this verse is understood as holding historical significance not for the period of Moses, but for the time of the author in the second century B.C. Davenport suggests that the Satan of Jub 50:5 is not a proper name but refers to the adversaries of Israel, in this instance the Seleucids.[46] He suggests that the period of the Hellenists, at the time of the writing of Jubilees, is a parallel period to the ancient wilderness wanderings. It is clear that he sees Jub 50:4 as part of an eschatological timetable.[47]

Davenport assumes a contradiction of sources in Jub 50:1-5. He suggests that the whole of Jub 50:1-4 comes from his Angelic Discourse (A)[48] but views Jub 50:2b as an insertion.[49] There seems to be no good reason for viewing Jub 50:2b as a later addition. Davenport suggests that it was inserted to discourage the kind of calendrical speculation that A intended. For Davenport, the "year" mentioned in Jub 50:2b refers to the year of entrance into Canaan. An alternative interpretation for this verse will now be suggested.

The verse reads, "But I have not told you of the *year* until you enter into the land which you are about to possess." This year is not the year of entrance into Canaan which is mentioned below in Jub 50:4, but instead it refers to the details of the calendar. The book has detailed schemes of sabbaths, jubilee years, sabbaths of years (Jub 50:2a) but the calendrical details have been confusing, conflicting and in many instances impossible to determine. Jub 50:2b tells us that the exact details of the calendar will be given *after* entrance into Canaan. This interpretation seems to conflict with the calendrical discussion at Jub 6: 22-38, but both passages are referring to the same incident. The precise details of the organization of the year have been forgotten. Now Moses is given the specifics of the year once again. Jub 50:2b is not a prediction of a future event but is a statement concerning the calendar.

The interpretation just given for the *year* in Jub 50:2b is consistent with the context. I have *told you* (הגדתי) of the sabbaths, the jubilees and the sabbaths of years, but of the specific year and its intricacies I have not *told* you. The details of the year up until this point have not been given to Moses, details which he will receive when he enters the promised land.

Davenport draws the conclusion that the author of Jub 50:4-5 (his source A) presents "the apocalyptic assumption that history operates according to a blueprint."[50] While such a statement seems to be quite obvious, and one could certainly test out such a suggestion, more importantly one still wonders what that blueprint is, how it relates to the chronology of the Old Testament (particularly Genesis and Exodus), and how a 364-day non-intercalated calendar fits into such a scheme. Davenport gives no details. Such questions will occupy the present thesis later on in the chapter.

iii. Grabbe

Influenced by the great chronological scholar Ben Zion Wacholder,[51] Lester Grabbe discusses the problem of periodization and its relationship to exact calculation.[52] His purpose is to develop further the three-stage chronological theory of Wacholder.[53] Grabbe suggests that Jubilees is a place where chronology and periodization meet.[54] For him chronology is "the attempt to work out a scientific and accurate dating of historical events"[55] and periodization is "... dividing history into schemes with discrete divisions or ages...."[56] He feels that periodization also has a similar goal to chronography; the determination of the future.[57] Chronography is "...stereotyped, stylized, frequently periodized, pre-scientific chronology...."[58] If one believes in the efficacy of the jubilee as does our author, it would be an easy step to think that history was divided into large jubilee periods. However, in Jubilees we find only one such period. The Exodus, which is the major event in the history of the nation, comes at the jubilee of jubilees, in the 50th jubilee period from creation.

It appears as though Grabbe is only partially right. To be sure, Jubilees is an attempt to work out a scientific and accurate dating of historical events under the limitations imposed at the time during which the author is writing. The author is not attempting to deceive. But it is less apparent that he is dividing history into ages or abstruse divisions. The divisions which are of central importance to our author are not abstruse. They are obvious. They are jubilees of 49 years each. It could also be argued that, if our author was working with ages or large periods of time similar to the world millennial week

concept, it would be expected that an author who prides himself in his precision might begin a new era, not in the year 2411AM, (which is somewhere in the 50th jubilee), but would rather calculate his dates so that the new era began in 2402AM which is exactly 49 jubilees. And would there not be a more definite calculation of the periods to follow the Exodus? Could we not have expected our author to have made a prediction of the end of the next era? Jubilees 50:5 states no more than that the jubilees shall pass until Israel shall be cleansed. Equal chronological cycles of 49 years each, and not long periods of 49x49 years, are important for Jubilees. Periodization is of no concern. The definition of chronology and chronography proposed by Grabbe deals more adequately with what is found in Jubilees than does his definition of periodization.

None of these theorists have adequately understood the design found in Jubilees.

Before we begin our discussion of chronological design in Jubilees, a question of some importance needs to be settled, the length of a jubilee period in Jubilees.

b. The Length and Purpose of the Jubilee in Jubilees

When Wiesenberg considered the jubilee question in his important article "The Jubilee of Jubilees,"[59] his purpose was not to understand the jubilee in Jubilees, but to contribute to an understanding of an ideological feature of the Qumranites.[60] As an advocate of the close relationship between the calendars of Jubilees and Qumran, his examination of the jubilee in the Qumran context is quite understandable. However,

as such an exact relationship between the calendars is suspect[61] it is necessary to re-examine the jubilee in Jubilees in order to gain an understanding of the author's purpose in using such a system.

The length of jubilee periods is never mentioned explicitly[62] but can be determined by considering the ages of the patriarchs. All of the examples given lead to the same conclusion and so one example is sufficient. In Jub 10:16 we read that the life-span of Noah was 950 years which is 19 jubilees, 2 weeks and 5 years. By calculation (19x?+ [2x7]+5=950) it is determined that a jubilee is 49 years.

There is, however, an Enoch tradition at Jub 4:21 which raises a difficulty for the length of a jubilee. In the passage Enoch is 65 years old. This is derived by subtracting the date at the birth of Enoch's first child from the date given for the birth of Enoch. These dates are: 12 jubilees, seven weeks, six years from creation, or 587AM; and 11 jubilees, five weeks, and four years from creation, or 522 AM.[63] The difference is 587-522=65 years. The text then informs us that he is with the angels of God *six jubilees of years* which by calculation should be 6x49 or 294 years.[64]

The MSS differences do not affect the number six. The phrase, "these six jubilees of years" has a number of different readings in the manuscripts and, as Davenport[65] has pointed out, has no antecedent and cannot be reconciled with the previous verse.

If 294 and 65 are added together, then the life-span of Enoch is 359 years. This number does not agree with the well known 365 years for the life-span of Enoch which is found in the Genesis account. Such a discrepancy needs to be accounted for. There are at least six possibilities:

1. Enoch's life-span is not mentioned here and so is considered unimportant to the Jubilees author. Since the 365 cannot be a calendar reference for Jubilees who works with a 364-day year, he has chosen to ignore the 365 years of Enoch. This is an argument from silence but it should not be ignored.

2. If the years of Enoch were meant to be 364 in Jubilees to agree with the calendar, then 364-294 leaves 70 years for Enoch's life on earth before he spends six jubilees with the angels. This is reminiscent of the 70 years needed by Adam to obtain 1,000 years. There are two difficulties with such a suggestion. First, there is no evidence for a life-span of 364 years for Enoch in Jubilees as in Genesis. Neither his death year nor his total number of years are recorded. Second, all MSS support a period of 65 years and so the suggestion which uses 70 years cannot apply.

3. The length of time is approximate.[66] It is highly unlikely that the Jubilees author would use an approximation for such an important number.

4. The original Jubilees number was 300 years, agreeing with the 300 years of Genesis; and a well-meaning scribe changed the 300 years to six jubilees, thinking that a jubilee was 50 years in Jubilees rather than 49. This too is highly unlikely.

5. The verse has been corrupted in transmission or translation and should read *six years of this jubilee*.[67] While this interpretation is possible, it ignores the exactness of the 300 years in the Genesis parallel.

6. An earlier and as yet undiscovered Enoch tradition of six jubilees

of 50 years each (which agrees with Genesis), and which is preserved in 4Q227,[68] is behind the verse. Our author failed to adapt the 50 year jubilee period to his 49-year jubilee period and so an error has crept into his system. We have already seen evidence that the author has taken over earlier traditions without adapting them to his system,[69] and so it is possible that in Jub 4:21 this is also the case. Such a position allows us to account for the 300 years needed to bring the life-span to 365 and it also accounts for the incorrect length of a jubilee period. This is an isolated case of our author neglecting to adapt an earlier tradition to his system where a jubilee period is 49 years. Since this position adequately accounts for all elements in the discussion, it is accepted as the most probable possibility. If it is in fact from an undiscovered Enoch tradition, then it has no effect on the general value of a jubilee in Jubilees as it has not been adapted to the system.

In Jubilees, a jubilee is 49 years and there are 50 jubilees presented from creation to the entrance into Canaan. This is a total period of 2450 years which is five periods of 10x49 jubilees, but there is no evidence from within the book that this periodic breakdown is of any significance.[70] The divisional years 490AM, 980AM, 1470AM and 1960AM pass by without comment. It seems that the period from creation to Sinai (2410 years) is significant, but not the smaller units of 490 years. The largest unit of any real significance is the 2450 years (or 50 jubilees), but the next largest unit of any importance is the jubilee of 49 years. But why does our author work in periods of 49 years and not in larger units or eras? Is he more interested in factual details of

past eras than in the eras which lie ahead? Is he an historian and not an apocalyptist?

Let me say this another way. Is he attempting to write accurate history with correct dates[71] or is he writing history as a scheme, as periodized chronology?[72] Or is he in some naive way attempting to do both? If he is attempting to write accurate history, a major problem would confront him as there are no datum points available by which he might test his system of dates. Since there are no datum points for this early period of patriarchal history, his dates would be verifiable only in conjunction with the tradition which was behind his numbers and so there is no test for accuracy at all. Even so, there seems to be little reason to doubt the fact that the author felt he was writing a fairly accurate account of the patriarchal period. As other traditions of the patriarchal chronology began to circulate, only then could the chronology of Jubilees be questioned and challenged.

For the author of Jubilees history had a design. This was alluded to in the chapter on calendar when it was observed that many of the important patriarchs are born on the same feast day. It is also quite clear that there are 50 jubilees from creation to Canaan. This seems to be the only clear example of periodization. The plan of the author is to write accurate history within what he feels to be a specific framework using the unit called a jubilee.

c. Design in Jubilees

The method of the author of Jubilees in respect of dates is varied. At times his system is identical to the Genesis account (as in

the ages of the early patriarchs which parallel the numbers in the SP), while at other times the biblical account is corrected (as in the flood narrative); some undated biblical events, on the other hand, are given precise dates (such as the tower of Babel incident).

The dates which the author has used are not arbitrary. Although the reason behind the scheme is not immediately obvious, the dates given for each event probably had a symbolic value in the overall design which the author used to shape his material. The dates are made to fit into his scheme of jubilees, weeks and years.[73]

His scheme, unlike that of some other Jewish writings, is not an eschatological apocalypse in which the end of the world is directly calculated. Neither is the notion of a world millennial week to be found in Jubilees. The idea that a thousand years are equal to a day is found in Jub 4:30 but it does not refer to a millennial world week.[74] If a millennial world week was implied in this passage one should expect this thousand-year period to refer to the first day of creation. Instead, it refers to "the day" of the eating of the fruit of the tree of knowledge in the garden of Eden, an event which occurred seven years after the week of creation.

It is at this point that the calendar becomes important for chronology. If one is working with a 364-day year as in Jubilees, 1 Enoch and Qumran, then the scheme will be out of synchronization with actual chronology by one and one-quarter days per year and 1,250 days or 3.42 years in 1,000 years. As there is no evidence for intercalation of the calendar in Jubilees, the chronology of Jubilees cannot be exact.

To our minds, such a discrepancy with actual chronology is

intolerable. Not so for the author of Jubilees. For him, the jubilee, divisible by seven as is his calendar, is the standard. His entire system is neat and orderly and completely symmetrical. Even the 50 jubilees from creation to Canaan is divisible by seven (2450÷7=350 weeks of years). There is still the question which remains: does the author intend to work with large periods or eras, or does he merely choose to work with exact periods of 49 years within the bounds of past history, never venturing into the world of future speculation?

From a cursory look at Jubilees it seems as though the author is not interested, except in a minor way, in larger periods or eras. Even though an entire dissertation has recently been written on eschatology in Jubilees,[75] those passages which are decidedly eschatological[76] imply that, for the author, the design of future history is directly related to past history. In the earliest passage in Jubilees in which the scope of both past and future history is considered (Jub 1:26), Moses is to receive the details of both past and future history which were first revealed to Enoch (Jub 4:19).[77] But is this a concern for past chronology, as the text of Jubilees would suggest, or does the reference to future history suggest an interest in eras which are still to be determined by the course of history?

If the narrative tradition which Jubilees used had no chronological dates, then a main purpose of adding such dates as are found in Jubilees would clearly be to bring order and perspective to the narrative tradition. Yet, if the received tradition had no dates, it would be tempting to build a system into the numbers, to show that the chronology and the narrative were somehow in agreement, giving a deeper meaning to the

numbers. In Jubilees, this is seen most obviously in the birthdates of the patriarchs, falling on the Feast of Weeks. Of even greater importance is the chronological scheme of jubilees, weeks and years which is divisible by seven. Every event from the beginning of time down to the entrance into Canaan is placed on a chronological grid. Jubilees is a system, it is superimposed upon patriarchal narrative traditions, and it does have the purpose of bringing chronological order to what would otherwise be timeless narratives with no chronological datum points at all.

The author of Jubilees works with only one large unit or era, that of the period from creation to Canaan. More important for his purpose are the smaller units of jubilees, weeks and years and the exact dating of people and events. He works with a plan or design, which is superimposed upon past history. The actual historical points to which these events refer are not possible to recover. With a well-thought-out design the author of Jubilees attempts to fill the void that so disturbs him.

CHAPTER FOUR

CONCLUSION

A. The Questions of Authorship and Dating

In the preceding chapters the areas of Calendar, Genealogy and Chronology in Jubilees were examined. It was demonstrated that there is a calendar which is unique to Jubilees but which is internally different from the calendars found in 1 Enoch and the Qumran writings. This period when 1 Enoch, Jubilees and the Qumran literature are written is one of unrest, upheaval and uncertainty in matters such as the calendar. The history of the calendar in the Bible itself is not clear and it has been suggested that as many as four different calendrical systems are functioning there.[1] By the second century B.C. the Pharisees and Sadducees are emerging as the central parties in Judaism and the intercalated luni-solar year seems to be emerging as dominant. The lunar year needs some system of intercalation to bring it into synchronization with the sun and so every second or third year an intercalary month was added. This system depends on actual observations of the moon by which the beginning of the month (and year) can be determined.

It should not be a surprise when it is discovered that the calendar of Jubilees, the product of some sectarian writer, is ignored by most of Judaism. Even though the sectarian writer of Jubilees holds to a conservative-pietist religious position, it is in all probability the calendar and not its theology which causes the entire work to be

ignored by most of Judaism. Only radical groups like the Qumranites, a sect which has left the rest of Judaism in order to live and worship in a private community, felt the need to preserve the distinctive ideas and calendar of Jubilees. As far as I am aware there are no discussions of its potential or possible canonical status except in the Ethiopian church.[2] Yet, with the emergence of the luni-solar calendar which is later supported as the official Jerusalemite calendar, the calendar of Jubilees would be viewed as a challenge to what was emerging as the norm. As we have already seen, festivals fall on different days in different calendars and the calendar of Jubilees would always be out of phase with the luni-solar calendar. This alone, even though Jubilees has a conservative halakhah, would be reason enough for rejecting the entire work.

The calendar is extremely important for understanding the community within which Jubilees is written. In his consideration of the author of Jubilees VanderKam concludes that he is a proto-Essene, writing before the Essenes depart for Qumran.[3] This designation of the author as a proto-Essene is unfortunate. As we have noted earlier there is no consensus that the Qumranites were in fact Essenes. Also, and by VanderKam's own admission,[4] the ancient sources are silent regarding a distinct Essene calendar. Finally, our discussion of the calendar has shown the calendars of Jubilees and Qumran to be different in a significant way. It is more likely that the author of Jubilees is a member of another sectarian community, one of many along with Qumranites and Essenes. It seems probable that many groups, the Hasidim, the Qumranites, Essenes, the author of Jubilees, proto-rabbinic groups, held similar halakhic and theological views but also held very distinct positions on many points.[5]

Unless further information emerges to enlighten us concerning the group behind Jubilees, it is better to let the sect remain unnamed.[6]

The calendar can also add to the discussion of the date of Jubilees. By the second century B.C., works such as Jubilees, 1 Enoch and the Sibylline Oracles, which are written as though they were from an ancient time, are not uncommon. The canonical book of Daniel is most familiar to us in this regard. The evidence that shows Jubilees to be anachronistic, which places the work at the time of Antiochus IV rather than at the time of Moses when it purports to be written, is well documented.[7]

VanderKam,[8] who holds to the antiquity of the calendar presented by Jubilees,[9] and dates the work to 161-152 B.C., suggests that after the death of the last Seleucid High Priest, Alcimus, a calendrical struggle ensued and the author of Jubilees writes his work in an attempt to gain a reinstatement of the old 364-day calendar. This period of calendar dispute ends with Jonathan, the next Seleucid High Priest, who returns the cult to the use of the luni-solar calendar. VanderKam also speculates that the rejection of the 364-day calendar at this time is the catalyst which forces the Qumranites, who support the 364-day year, to separate from the Jerusalemite Temple and priesthood. While this is speculative, it is plausible, except for the fact that there is nowhere in Jubilees any reference to the desecration of the Temple by Antiochus.[10] The only possible reference is at Jubilees 23:21 which reads, "...and they shall defile the holy of holies with their uncleanness and the corruption of their pollution." The verses which follow suggest that there will be a persecution of Israelites by Gentiles, but the historical referent is vague. It is certainly anachronistic in its

present context, where it is placed shortly after the death of Abraham, and the possibility that it refers to the persecutions by Antiochus should not be ruled out, however remote the reference seems to be. The author of Jubilees is writing in such a way so that his readers will believe that the book is the one revealed to Moses. Even though he is aware of events in his own day, we should not expect him to be so clumsy as to have his narrative reflect recent events.

Charles[11] holds the position that the Maccabean wars are reflected in the passage which has Jacob and his sons victorious over the Amorites (Jub 34:1-9). Charles recognizes that behind this passage there is an older legend about the conquest of Shechem by Jacob,[12] and so the passage need not reflect Hasmonean victories.[13] VanderKam agrees with Charles that this passage reflects the Maccabean wars which date as late as 161 BC.[14] VanderKam holds that the book of Jubilees can be regarded as a reaction to the religious decrees of Antiochus IV which forbid the practice of Jewish religion (1 Macc 1; 2 Macc 6).[15] The system of Sabbath observance and the development of the calendar and chronology based on the number seven in Jubilees are in direct conflict with the purposes of Antiochus IV. After his young successor, Antiochus V, rose to power, in the two year period of his short-lived reign, some concessions were granted towards the religious freedom of the Jews. If the suggested dating of VanderKam was correct, it would be possible that such a situation would encourage conservative pietists like the author of Jubilees to begin their struggle to return Judaism to its former glory. As with Jub 23:21, the evidence is far from convincing due to the vagueness of the material.

Jub 31:15, which has been discussed in detail earlier,[16] has been emended by Charles to agree with Testament of Levi 8: ἀρχιερεῖς καὶ κριταὶ γραμματεῖς .[17] Charles argues on the basis of this verse, that Jubilees cannot antedate 152 B.C. when Jonathan becomes High Priest, or 140 B.C. when Simon acquires the office. VanderKam suggests that while this interpretation is plausible, it is not necessary.[18] He concludes that the Maccabean High Priests were not the first descendants of Levi to preside over both civil and religious structures in Judean society, and so Jub 31:15a may reflect the normal structure of Judean society during much of the post-exilic period.

VanderKam also contests that Jub 31:15a refers to the Maccabean period after 152 B.C. as the Essenes were opposed to Simon, and may have been opposed to the earlier Jonathan. Jubilees, however, holds the priestly descendants of Levi in the highest regard,[19] leaving no other conclusion than that the author of Jubilees did not know of the Maccabean High Priesthood.[20]

It can now be concluded that the date of Jubilees is before 152 B.C. The lack of reference to the desecration of the Temple by Antiochus is still difficult to understand. It seems highly improbable that such an event would not be important to the author, but it is of course possible that he makes no mention of the event because it is long past or because, as has been suggested earlier, he is writing as though the work is from the hand of Moses and any reference to such a significant event would spoil his literary technique. In any case, the period after the death of Antiochus IV

in 163 B.C. is one of political upheaval, and it seems to be a most likely period for calendrical concerns to be raised once again. So circa 163-152 B.C. is the most likely date.

B. The Relationship of the Calendar to Chronology

A pietist-conservative from an unnamed sect, writing circa 163-152 B.C., has presented the patriarchal narratives in such a way so that each event is dated by a particular calendar in a schematized chronological system. The question of the relationship between the calendar of Jubilees and the chronological scheme presented by the author has received very little attention. This is probably because scholars have been interested in one or the other of these elements and also because it seems so obvious that the calendar and chronology, based on the number seven, must be dependent upon one another. Statements such as "Running throughout the book is a chronological framework that presupposes and advocates the use of a solar calendar"[21] are not uncommon.

The author of Jubilees presents the calendar with the force of Law. The festivals, the Sabbath, and also the calendar were kept in heaven before the creation of the world, and the calendar becomes an integral part of that world. The chronology presented by the author is dependent upon the calendar and so by this connection it, too, has the force of Law.

In the previous chapter it was noted that a primary interest of the author lies in the jubilee cycles of 49 years which run from creation to Sinai. It is also known that this chronological system is based on a 364-day calendar which is non-intercalated and is also a reaction to both lunar and luni-solar calendars. In the actual Jubilees calendar all days and festivals are fixed, as opposed to the lunar or luni-solar calendars which, by their very nature, cannot be fixed. The polemic of the author of Jubilees is a clear reaction to these calendars (Jub 6:32-38), a polemic which we have seen to be lacking in 1 Enoch and in the Qumran writings.[22]

It has been suggested[23] that the 364-day calendar is theoretical rather than practical because of the precision it offers to apocalyptic writers for calculations of future events. Such an argument seems to be quite plausible when the War Scroll from Qumran is examined. Here a calendar of 364-days is presented which is to be used *at a future time* when the Qumranites defeat their enemies and return the Jerusalemite Temple to its earlier glorious state. But is this also true for Jubilees?

When the 364-day calendar in Jubilees is considered, the reason for its use in a chronological context is less clear. To be sure, there are apocalyptic elements in Jubilees and eschatological interests are present, but past history is of much greater concern than future history. The 364-day calendar of the Qumranites is for the *future* while the 364-day calendar of Jubilees is for

past, present and future. For our author, the calculation of past time schemes is just as important as are calculations of future time schemes.

It has already been argued in the last chapter that periodization was not important for Jubilees. Forty-nine year cycles are. Viewing the 49-year cycle as divinely ordained, it was shown that the design of the world had been pre-ordained. God expected the world to run on a 49-year-jubilee system with a 364-day non-intercalated calendar. If man followed the divine laws then the system would function smoothly (Jub 6:32-38). As people were free to follow their own desires, observing the wrong calendar, marrying foreign wives, and worshipping foreign gods, their calendar, their genealogical line and the chronology of their world were affected. Only when people follow the true God of Israel, and marry Israelites, do the calendar and chronological systems fall into place with the pre-ordained plan. By linking the calendar, genealogy and chronology in this way, the author has built this into an elaborate system indeed.

C. Future Studies in Jubilees

This study has considerable implications for future work on the book of Jubilees. Scholars have been much too quick to conclude that the Qumran calendar is in fact identical with that found in Jubilees. The present thesis has called the identification of these calendars into question and suggested that the Qumran literature is not clear on the calendar which was used daily by the sect.

In view of the new manuscripts now available,[24] there needs to be a new critical edition and translation. Jubilees has come into its own as an important factor in understanding a segment of the very complex picture of post-exilic Judaism.

On a more pedantic level, the unusual divergencies of MS A on calendrical matters needs further consideration. I suspect that a mediaeval scribe has done some correcting in order to bring the calendar of Jubilees into agreement with some other calendar which was familiar to him. This is unfortunate in a work which has a particular calendar which is so essential for a clear understanding of the purpose of the author.

Finally, and especially in the light of the unity which the present thesis has demonstrated for the elements of calendar, genealogy and chronology within the book, a redactional analysis which deals with themes and traditions needs to be done. Such a work would include the material which has surfaced since the Dead Sea discoveries and would be aware of new methodological approaches. The work of R.H. Charles will never be obsolete but it needs supplementation. A redactional commentary would fill the void.

ENDNOTES

INTRODUCTION

[1] It was designated a type of "rewritten bible" by R.H. Charles, *Apocrypha and Pseudepigrapha of the Old Testament* (Vol. 2; Oxford: 1913) v. It is classed as midrash by S. Tedesche, "The Book of Jubilees," *IDB*, vol. 2, 1003.

[2] For a discussion of Noachid Laws and Jubilees see J.P. Schultz, "Two Views of the Patriarchs: Noahides and Pre-Sinai Israelites", in *Texts and Responses* (Leiden: 1975) 41-59.

[3] The division of Jubilees into chapters was first made by A. Dillmann. See his critical edition, *Mashafa Kufālē sive Liber Jubilaeorum* (Keil and London: 1859).

[4] The development of deuteronomic themes has been examined by J.A. Williams, "A Conceptual History of Deuteronomism in the Old Testament, Judaism and the New Testament," (unpublished Ph.D. dissertation, Southern Baptist Theological Seminary, 1978).

[5] Cf. Abraham and the Ravens, Jub 11:15-24.

[6] Jub 1:4-29; 23:14-31. See especially Gene L. Davenport, *The Eschatology of the Book of Jubilees* (Leiden: 1971).

[7] H. Ewald, "Ueber die Aethiopischen Handschriften zu Tübingen", *Zeitschrift für die Kunde des Morgenlandes* 5 (1844) 164-201.

[8] R.H. Charles, *Mashafa Kufālē or the Ethiopic Version of the Hebrew Book of Jubilees* (Oxford: 1895).

[9] A. Dillmann, "Das Buch der Jubiläen oder die kleine Genesis", *Jahrbücher der biblischen Wissenschaft* 2 (1850) 230-256 and 3 (1851) 1-96.

[10] Dillmann, (1859).

[11] So A. Jellinek, *Bet ha-Midrasch. Sammlung kleiner Midraschim und vermischter Abhandlungen aus der älten jüdischen Literatur* 3 (Leipzig, 1855) ix, who said this Essene, who so loved the number seven, was opposed to the Pharisaic practice of fixing the beginning of months by intercalation rather than observation; קידוש החדש על פי הראייה. This solution by Jellinek was very perceptive at such an early time.

[12] So Z. Frankel, "Das Buch der Jubiläen", *Monatschrift für Geschichte und Wissenschaft des Judentums* 5 (1856) 311-316 and 380-400, esp. p. 396. See the range of early suggestions in Charles, *The Book of Jubilees or the Little Genesis*, (London: 1902) xxii-xxvi.

[13] M.J. Krüger, "Die Chronologie im Buche der Jubiläen", *Zeitschrift der deutschen morgenländischen Gesellschaft* 12 (1858) 279-299, esp. 279-280.

[14] Wm. Singer, *Das Buch der Jubiläen oder die Lepto-Genesis* (Stuhlweissenburg, Hungary: 1898), as cited in Charles, (1902) xxv. I have not seen the work.

[15] G.H. Schodde, *The Book of Jubilees* (Oberlin, Ohio: 1888) a reprint of the Bibliotheca Sacra edition of 1885-1887.

[16] Charles, (1902).

[17] Cf. Ch. Albeck, *Das Buch der Jubiläen und die Halacha* (Berlin-Schöneberg: 1930).

[18] Cf. L. Finkelstein, "The Book of Jubilees and the Rabbinic Halaka," *HThR* 16 (1923) 39-61.

[19] D. Barthélemy, "Notes en marge de publications récentes sur les manuscrits de Qumrân," *RB* 59 (1952) 187-218.

[20] So A. Jaubert, "Le calendrier des Jubilés et la secte de Qumrân. Ses origines bibliques", *VT* 3 (1953) 250-264, whose assessment is built on the earlier work of Barthélemy, (1952); S. Talmon, "Yom Hakkipurim in the Habakkuk Scroll," *Biblica* 32 (1951) 549-563, and A. Dupont-Sommer, "Contribution a l'exégèse du Manuel de discipline X 1-8," *VT* 2 (1952) 229-243.

[21] James C. VanderKam, *Textual and Historical Studies in the Book of Jubilees* (Missoula, Montana: 1977) 136-138. Palestine is one of three localized areas to which, according to a school best known through F.M. Cross, early texts can be traced. There have been considerable reactions to the theory and it has not gained wide acceptance outside of the United States, as noted by S. Talmon, "The Textual Study of the Bible - A New Outlook," in *Qumran and the History of the Biblical Text* (Cambridge, Mass: 1975) 321. For the most concise statement of the theory see F.M. Cross, "The Evolution of a Theory of Local Texts," in *Qumran and the History of the Biblical Text* (Cambridge, Mass: 1975) 306-320.

[22] W. Baars and R. Zuurmond, "The Project for a New Edition of the Ethiopic Book of Jubilees," *JSS* 9 (1964) 67-74. Several new manuscripts have been catalogued recently. See William F. Macomber, *A Catalogue of Ethiopian Manuscripts Microfilmed for the Ethiopian Manuscript Library, Addis Ababa, and for the Monastic Manuscript Microfilm Library, Collegeville* I-IV (Collegeville, Minnesota: 1975-1979), I,6,106,218; II,428; IV,159,277,284.

[23] M. Testuz, *Les idées religieuses du Livre des Jubilés* (Geneva et Paris: 1960).

[24] Testuz, (1960) 179-195.

[25] J.T. Milik, "Fragment d'une source du Psautier (4 QPs 89) et fragments des jubilés...," *RB* 73 (1966) 102-104.

[26] Goldstein, *I Maccabees* [AB] 41 (New York: 1977) 143-152.

[27] M. Hengel, *Judaism and Hellenism* 2 vols. (London: 1974) I, 245-246, rightly challenges the suggestion that direct dependence is possible.

[28] Testuz, (1960) 134-137.

[29] Testuz, (1960) 136.

[30] Testuz, (1960) 137.

[31] Hildegard and Julius Lewy, "The Origin of the Week and the Oldest West Asiatic Calendar," *HUCA* 17 (1942-43) 1-155.

[32] So R. North, *Sociology of the Biblical Jubilee* (Rome: 1954) 73.

[33] This is recognized by Testuz, (1960) 138.

[34] Testuz, (1960) 138.

[35] VanderKam, (1977) 251 reacts to this point.

[36] Davenport, (1971).

[37] Davenport, (1971) 14.

[38] Davenport, (1971) 15.

[39] Davenport, (1971) 14.

[40] E.P. Sanders, *Paul and Palestinian Judaism* (London: 1977) 387, rightly asks why Davenport has not included all the Temple references such as Jub 6:14.

[41] Davenport, (1971) 16.

[42] John Nolland, "Sib. Or. III 265-94, An Early Maccabean Messianic Oracle", *JThS* 30 (1979) 158-166.

[43] Davenport, (1971) 17.

[44] Davenport, (1971) 72-75.

[45] This was being done coincidentally with Davenport by G.W.E. Nickelsburg, *Resurrection, Immortality, and Eternal Life in Intertestamental Judaism* (Cambridge, Mass: 1972) 46-47.

[46] VanderKam, (1977).

[47] VanderKam, (1977) 95.

[48] VanderKam, (1977) 136-138.

[49] VanderKam, (1977) 136.

[50] VanderKam, (1977) 137.

[51] VanderKam, (1977) 283.

[52] VanderKam, (1977) 284.

[53] S. Zeitlin, "The Book of 'Jubilees' and the Pentateuch," *JQR* 48 (1957) 234.

[54] This theme of righteousness which is related to the genealogies is developed in a radically different way in Jubilees from the Genesis account. In Jubilees, one is struck by the abundant increase in the use of ጻድቅ፡ ጽድቅ፡ with more than sixty occurrences. (Jub 1:6, 16, 17, 20, 25; 5:12, 13, 16, 17, 19; 7:20, 26, 34, 37; 10:6, 10, 17; 14:6, 16:26; 20:9; 21:4, 21, 24, 25; 22:10, 15; 23:10, 21, 26, 30; 24:29; 25:1, 13, 14, 15, 21; 28:6; 30:17, 18, 19, 20, 23; 31:15, 20, 24, 25; 35:2, 13; 36:6) as opposed to Genesis-Exodus with fourteen occurrences; (Gen 6:9; 7:1; 15:6; 18:19, 23, 24(2), 25(2), 26, 28; 20:4; 30:33; 38:26; Exod 9:27) of צדק צדיק צדקה. There is a very interesting expression ተክለ፡ ርትዕ፡ "the plant of righteousness" which seems to appear only in Jubilees.

[55] Krüger, (1858),279-299.

[56] Ferdinand Bork, "Zur Chronologie der biblischen Urgeschichte," *ZAW* 47 (1929) 206-222.

[57] Charles (1902) *loc. cit.*, has calculated the chronological material and placed it in the margins. At times his calculations will be disputed and corrected. For example, his first reference of 2450 A.M. at Jub 1:1 on the basis of Jub 50:4 should be corrected to 2411 A.M., which is the first year after the Exodus. 2450 A.M. is the last year of the forty years of wilderness wandering.

CHAPTER 1

1 See Bent Noack, "The Day of Pentecost in Jubilees, Qumran and Acts," *ASTI* (1962) 81-82.

2 አተሳብዓዩመ፡ from ኀሰብዕኀ፡ See Dillmann, (1865) 363.

3 In Jub 1:1 the tables of the Law are given to Moses but "the account" is a book of history.

4 Charles followed MS D, ነገሬ፡ = "the history" instead of the more awkward reading ነገሮ፡ of MSS A, B and C.

5 ስምዕ፡ = rumor, report, testimony.

6 This suggestion of a remnant elect is against Sanders (1977) 362-364. His position will be considered in detail below.

7 Davenport, (1971) 14.

8 Davenport, (1971) 14, line 15 says "The Angelic Discourse" but he must mean R^1.

9 Davenport, (1971) 14n3 and 15.

10 Cf. Charles, (1895) 4n13-28.

11 Davenport, (1971) 15.

12 Davenport, (1971) 16 and 16n9 sees the eschatological sanctuary as physical. An alternative to this will be suggested below.

13 Sanders, (1977) 387.

14 In Jub 1:20, ቤልሖር (Belḥor) whom Charles names Beliar, is introduced.

15 See below for the possibility of reading "dictate to Moses" rather than "write for Moses."

16 The position of VanderKam (1977) 103n1, that originally the work had a causative imperative form (hktyb) = "to dictate" rather than a simple qal (ktwb) = "to write", has no MSS support, but as we have shown the context is consistent with his proposed emendation and it should most likely be accepted. Recently VanderKam, "The Putative Author of the Book of Jubilees," *JSS* 26 (1981) 209-217, has elaborated the point he made earlier in his thesis. His conclusion that Jubilees is the work of a single author is sound and VanderKam suggests (p.209) that he will deal with the question of the unity of the work in the near future.

[17] So Sanders, (1977) 387.

[18] Charles, (1902) 1.

[19] This opinion was known to the Rabbis. See Charles (1902) 2 n.4.

[20] H. Rönsch, *Das Buch der Jubiläen oder die Kleine Genesis* Leipsig 1874.

[21] A. Epstein, "Le livre des Jubilés, Philon, et le midrasch Tadsché," *REJ* 22 (1890) 80-97; (1891) 1-25. It should be noted that R.H. Charles, (1902) lxix and 56 n.32 supports Epstein, and cites him (1902) 53 n.22 and 55 n.29-30 on the calendar question.

[22] H. and J. Lewy (1942-1943) 107.

[23] A work which deals with this aspect of Jubilees but which I have been unable to locate is W. Wirgin, "The Book of Jubilees and the Maccabean Era of Shemittah Cycles", University of Leeds Oriental Society Monograph Series 5 (Leeds: 1965).

[24] H. and J. Lewy (1942-1943) 107. S. Zeitlin in his numerous writings disagrees with such a conclusion. He feels that the Jubilees calendar is a reflection of an ancient pre-exilic solar calendar and is a protest against the introduction of the Babylonian lunar-solar calendar encountered in the exile. See especially "Some Stages of the Jewish Calendar" in *Studies in the Early History of Judaism* (vol. 1, New York: 1973) 183-193 esp. 188-190.

[25] Jaubert, (1953) 251; Jaubert, *La date de la cène* (Paris: 1957) 21, and Jaubert, "Le calendrier des Jubilés et les jours liturgiques de la semaine," *VT* 7 (1957a) 3b.

[26] J. Morgenstern, "The Calendar of the Book of Jubilees, Its Origin and Its Character," *VT* 5 (1955) 34-76.

[27] Epstein, (1891) 4-8, 13-20.

[28] Epstein, (1891) 5.

[29] Frankel, (1856) 392, argues that Jubilees must have four seasons (divisions of the year) with thirteen sabbaths each as there are 52 sabbaths per year (4x13=52). If a season has only twelve sabbaths, then the year is four short. He has not considered the possibility of the additional day each quarter being a sabbath.

[30] Epstein, (1891) 11. He does, however, recognize that other passages suggest a year of 12 months of 30/31 days which he calls a civil year as well as this year of 13 months of 28 days which he calls a religious year. For additional evidence in Jubilees for a tradition which uses this religious year see John T. Rook, "A Twenty-Eight-Day Month Tradition in the Book of Jubilees", *VT* 31 (1981) 83-87. This is against Epstein, (1891) 12, who claims that the solar (religious) system is used when the festivals are not involved.

[31] Charles, (1902) 55 n.29-30. The possibility of two calendars was, however, rejected by Kaufman Kohler, "Book of Jubilees," *Jewish Encyclopedia* 7 (1904) 301.

[32] Charles, (1902) 55 n.29-30.

[33] Charles, (1902) 54 n.29-30, wants to call the four days of remembrance "intercalary." This conclusion cannot be gained from 6:23-28 where they are yearly feasts which are fixed. If they were intercalary they would be found in a year periodically and not regularly.

[34] Talmon, (1951) 549-563; Jaubert, (1953) 256; J.B. Segal, "Intercalation and the Hebrew Calendar," *VT* 7 (1957) 250-307, esp. 294 n.1 which states that "The 364 day year of weeks may have been observed by the Qumran Sect"; J.M. Baumgarten, "The Beginning of the Day in the Calendar of Jubilees",. *JBL* 77 (1958) 355-360; Bent Noack, "Qumran and the Book of Jubilees", *SEA* 22-23 (1958) 191-207; Yigael Yadin, *The Scroll of the War of the Sons of Light Against the Sons of Darkness* translated by B. and Ch. Rabin (Oxford: 1962) 206; Jaubert, *La notion d'alliance dans le judaisme* (Paris: 1963) 90, suggests the calendars are "similar". S. Talmon, "The Calendar Reckoning of the Sect from the Judaen Desert," *Scripta Hiersolymitana* 4 (1958) 177, equates Jubilees, 1 Enoch, CDC and T12 claiming that they all use the same method of calendation. A.R.C. Leaney, *The Rule of Qumran and Its Meaning* (London:1966) 68; Willy Rordorf, *Sunday; The History of the Day of Rest and Worship in the Earliest Centuries of the Christian Church* (London: 1968) 183-184; J. Grintz, "Book of Jubilees," *Encyclopaedia Judaica* 10 (1971-1972) 235; Martin Hengel, *Judaism and Hellenism* (vol. 1, Philadelphia: 1974) 234-235; E. Schürer, G. Vermes, and F. Millar, *The History of the Jewish People in the Age of Jesus Christ (175 BC-AD 135)* (vol. 1, Edinburgh: 1973) 592 n.15.

[35] Jaubert, (1953) 251.

[36] Jaubert, (1953) 250-264.

[37] This theory has major dissenters who will be considered below. They are: Morgenstern, (1955) 34-76; Testuz, (1960) 159-164; Jacob Baumgarten, "הלוח של ספר היובלים והמקרא" *Tarbiz* 32 (1962/63) 317-328, now in English as "The Calendar in the Book of Jubilees and the Bible," in *Studies in Qumran Law* (Leiden: 1977) 101-114, and James C. VanderKam, "The Origin, Character, and Early History of the 364-Day Calendar: A Reassessment of Jaubert's Hypothesis *CBQ* 41 (1979) 390-411.

[38] Isaac Broyde, "Al-Maghariyyah," *The Jewish Encyclopaedia* 8 (1904) 254-255.

[39] Seven works are created on day one out of a total of 22 acts of creation. Both are symbolic numbers. It should be noted that on this first day the angels who are in control of the four seasons are created. These are essential to the proper functioning of the calendar.

[40] MSS A,C,D read ʾḥdwšym ; MS B reads ʾḥdwšym ʾḥd.

[41] All of these are divisible by seven.

Days:	1
Weeks:	7 days
Months:	4x7=28 days or 4 weeks
Season:	7x13 weeks or 91 days
Year:	7x52 weeks or 364 days
Shemittahs:	7 years
Jubilee:	7 shemittahs

42 Jaubert, (1953) 252-3.

43 Jaubert, (1953) 258-262.

44 Baumgarten, (1977) 106, "If the purpose of the author was to highlight the so-called liturgical days why are they never mentioned?"

45 VanderKam, (1979) 401-402, shows that in Jaubert's calendar Monday, Tuesday and Thursday could also be regarded as "liturgical" as they are not unimportant.

46 Testuz, (1960) 122-123 recognized that the system of the month in Jubilees is unclear. He used a 30-day month and suggested that the extra day needed to make up a 91-day division was a non-month day. Such a day is referred to in Jub 29:15-16 'between the time of the months.' It could be suggested, however, that ኀሠሥኒ is from the original חדשים which should have been rendered as ኀሥሥኒ by the Ethiopic translator and which would be translated "between the time (ጊዜ) of the divisions." The verse continues by listing the seasons. On these days, between the divisions, Jacob *remembers* his parents with food, and so the day between the months is likely a reference to a šarq day (Jub 6:23). The days are not "outside" the months but do divide the seasons.

47 VanderKam, (1979) 392.

48 J.B. Segal, *The Hebrew Passover: From Earliest Times to A.D. 70* (London: 1963) 269 wrongly assumes that the Omer ceremony is part of Jubilees. Perhaps he was influenced by Jaubert.

49 Baumgarten, (1977) 101-114.

50 It seems likely that they travelled on I/14. See Jub 49:18.

51 Morgenstern, (1955) 60.

52 These instances are 1:14, 3:32; 5:23; 29, 30(2); 6:1, 23(4), 25, 26(2), 27, 34, 38, 7:2; 12:16; 13:8; 14:1; 16:1; 24:22; 27:19; 28:14, 24; 31:1, 3; 33:1; 42:20; 44:1; 45:1.

53 The author himself tells us that the lunar calendar will come ten days too soon, disturbing his calendrical system (Jub 6:36-37). This rules out the possibility that the šarq did not occur in the month until the actual lunar sighting which would not be a fixed day in a 364-day calendar.

54 Jaubert, (1953) 255n1. Leaney, (1966) 84 says that "new moon" means no more than "first day" which explains an apparent and unexpected respect for the moon. He continues, "this is a curious verbal influence from the very lunar calendar which is being rejected." Dillmann, *Lexicon Linguae Aethiopicae* (Leipzig: 1865) 239-240.

Ethiopic šarq is, however, cognate with Hebrew, Arabic and Sabean (nowadays known as ESA or Epigraphic South Arabic) which refer to "the sunrise." See F. Brown, S.R. Driver, and C.A. Briggs, *A Hebrew and English Lexicon of the Old Testament* (Oxford: 1975) 977. It is possible that Ethiopic Jubilees is preserving some such solar meaning which would make the comment of Leaney invalid.

I am grateful to Professor Barr who pointed out the use of the hiphil (השריק) of שרק in Sir 43:9 and 50:7, the latter referring to the sun shining on the palace. See S. Schechter, *The Wisdom of Ben Sira* (Cambridge: 1899) 64 and Z. Ben-Hayyim (ed.), *The Book of Ben Sira: Text; Concordance and an Analysis of the Vocabulary* (Hebrew) (Jerusalem: 1973) 51. At Sir 50:7 משריק is a marginal reading.

55 Morgenstern, (1955) 37.

56 VanderKam, (1977) 41ff. In his assessment of 11QJub 4 (Jub 12: 15-17), VanderKam reconstructs as follows:

11QJub4 - line 3 has only בחמש

VanderKam fills it up as:

בחמשה בו ישב אברם בלילה
בראש החדש השביעי להביט אל

The expression בראש החדש השביעי is not found in the biblical parallel in Gen 11:31. Confusion of the term חדש as it relates to šarq can be seen in Davenport (1971) 59n3 where he determines that in Jubilees III/15 is a חדש and III/15 does not begin a month. The suggestion has been made that חדש can mean "full moon" rather than "new moon" by H. Cazelles, "Sur les origines du calendrier des Jubilés," *Bib* 43 (1962) 202-212, esp. 205-206 and A. Caquot, "Remarques sur la fête de la 'néoménie' dan l'ancien Israël," *RHR* 68 (1960) 1-18. The question is discussed in detail below.

57 Davenport, (1971) 59. As he is dealing with the blessings on Levi and Judah he ignores the birth date of Joseph which is also a šarq in month IV.

58 Davenport, (1971) 59n3.

59 Noack, (1962) 82-86.

60 See the discussion in Schürer, (1973) 590ff on the problems of determining the length of a month. In a 28-day month, day 15 is quite obviously not the middle, but neither is it the middle of a 30 or 31-day month. It is rather the middle of a 29-day month. It is therefore possible, in the old calendar of 29 and 30-day months, that month III had 29 days and that III/15 is related to such a system.

[61] Noack, (1962) 83-86.

[62] Noack, (1962) 83.

[63] An interesting discussion of these Noachid laws can be found in J.P. Schultz, (1975) 41-59.

[64] Charles, (1902) 53 was unable to account for the twofold nature of the covenant.

[65] Against Davenport, (1971) 59n3 who lists Jub 44:1 and 4 as the same day, III/15.

[66] This reconstruction will fit either Jaubert's or Morgenstern's proposal.

[67] Testuz, (1960) 122-123.

[68] Rönsch, (1874) 140.

[69] Charles, (1902) 177, n15-16.

[70] MSS C and D use ΗωϹΦ.

[71] Epstein, (1891) 13.

[72] Testuz, (1960) 123.

[73] Dillmann, (1865) 886.

[74] Zeitlin, (1973) 190 claims that Jubilees is a reaction to the change from a solar to lunar-solar calendar which introduced a thirteenth month due to intercalation. There is no concrete evidence for this suggestion.

[75] See Chapter 2, Genealogy.

[76] Charles, (1902) 22-24 n8-14.

[77] S.P. Brock, "Abraham and the Ravens: A Syriac Counterpart to Jubilees 11-12 and Its Implications," *JSJ* 9 (1978) 135-152, has convincingly demonstrated that there is an earlier *Vorlage* behind this tradition.

[78] Jaubert, (1953) 260; (1957) 37. See also S. Zeitlin, "The Book of Jubilees: Its Character and Significance," *JQR* 30 (1939/40) 26-28, who rejects the two-calendar thesis of Epstein (p. 27) and then suggests that there is no contradiction between equating five months with 150 days and accepting a 30, 30, 31-day system! He claims (p. 27n89) that there are five chronological months but 150 mathematical days. To eliminate the additional days which would bring the total to 152, he does not count the first (II/17) and last (VII/16) days of the flood. There seems to be no good reason for accepting this position.

79 Jaubert, (1953) 260.

80 Lewis, (1968) 190. Philo has agreed with the MT on the visibility of the mountains and has compressed the sighting of the land and the exit from the ark, agreeing with the LXX on ?/27.

81 If the author had meant for five months to equal 150 days, would he not have used the ፲፭ቀ፡(ፈ፲ቅ፡) as he did in Jub 3:17?

82 Adapted from J.P. Lewis, *A Study of the Interpretation of Noah and The Flood in Jewish and Christian Literature* (Leiden: 1968) 190-192.

83 The meaning and positioning of the šarq within the Jubilees calendar will be considered below.

84 Jaubert, (1953) 260.

85 Jub 5:23 records a šarq in month II. Noah enters the ark on II/šarq until II/16. This day, II/šarq has two possibilities. First, it could be II/15. The narrative is very compact and has ignored the Gen 7 detail concerning the collection of the animals. Second, it could be anticipating the Gen 7 narrative where it took seven days to enter the ark. This would put the date of the šarq to II/10. Neither can be proved. It is interesting to note that MS A which changed III/šarq to III/10 at Jub 6:1, has omitted the II/šarq reference at Jub 5:23. Is this a coincidence?

There is a 10 day discrepancy between the MSS B,C,D, and E and MS A at Jub 5:32 and 6:1. The former MSS all agree in reading ፩ሠ፭፡ ፹ሀቦ፡ (27) at Jub 5:32 while MS A reads ፲ ፹ ፪ (17). At Jub 6:1 where there is a similar discrepancy of five days, it seems likely that MS A is rejecting the traditional Jubilees calculation.

All MSS except MS A begin the flood on II/17 and end on II/27 as does the MT. MS A, however, begins and ends the flood year on II/17, possibly a reaction to the adoption of the 354+10 day Genesis flood calendar.

The change from the majority MSS reading of III/šarq (III/15) at Jub 6:1 to III/10 by MS A is significant for the discussion on number of days in a month. It has already been pointed out that there is no mention of Omer day in Jubilees, but III/15 which is the date of the Feast of Weeks (Oaths) is 50 days from I/22 in a 28-day month system. If account is taken of the date III/10 for Feast of Weeks in MS A, counting back 50 days to I/22 months I and II must have 30 and 31 days.

I		II				III
22	29	5	12	19	26	3 10
23	30	6	13	20	27	4
24	31	7	14	21	28	5
25	1	8	15	22	29	6
26	2	9	16	23	30	7
27	3	10	17	24	1	8
28	4	11	18	25	2	9

It seems likely that the scribe of MS A was aware of a flood tradition of 364 days and was rejecting any reference to a lunar system of 354 days. This scribe, who was working with a 31, 30, 30-day season, had no choice but to change III/15 of Jub 6:1 to III/10. A 28-day monthly system was inconceivable to him.

86 Dillmann, (1865) 239.

87 Dillmann, (1865) 239, šarq, "oriens i.e. coeli plaga orientalis" and *BDB*, 280 col 2, "sunrise, always at quarter of the heavens = east מזרח השמש."

88 It is unclear at Jub 6:29 whether weeks or sabbaths are implied. MS A reads ሰንበታተ while MSS B,C,D, and E read ሰንበታት . Thirteen weeks would have thirteen sabbaths.

89 Against E.R. Leach, "A Possible Method of Intercalation for the Calendar of the Book of Jubilees," *VT* 7 (1957) 392-397, and S. Zeitlin, "Notes relatives au calendrier juif," *REJ* 89 (1930) 349-359, S. Zeitlin, "The Judean Calendar During the Second Commonwealth and the Scrolls," in *Studies in the Early History of Judaism*, (vol. 1, N.Y.: 1973) 194-211.

90 There are two questionable 'ašrāq (Jub 31:1 and 42:20) where the month is not mentioned.

91 See Jub 5:23; 27:19ff.

92 See Jub 32:1ff; 49:1ff.

93 Morgenstern, (1955) 49n2. Testuz, (1960) 121 supports this conclusion.

94 It is to be noted that the MSS differences do not affect the meaning of the passage.

95 It should be noted, however, that in the calendars of both Jaubert and Morgenstern II/16 is a Sabbath which might suggest a reason for waiting until the 17th before closing the ark. A problem with this interpretation is that it permits animals to enter the ark on the Sabbath, a conclusion which is suspect.

96 D. Barthélemy and J.T. Milik, *Qumran Cave 1* [Discoveries in the Judean Desert] (Oxford: 1955) 82-83 and Plate xvi.

97 MS A reads "the 49th jubilee" instead of 44th as in the other MSS and the Latin. VanderKam, (1977) 77 explains this as MS A confusing the numeral ሀ (4) and ፀ (9).

98 MSS B,C,D and E read መኳነ፡መሲዮ፡ but MS A reads ወኮነ፡ and this forced the change from መሲዮ፡ to ሞሴተ፡. The Latin follows the MSS: *in locum vespera*.

99 Milik, (1955) Plate XVI.

100 Milik, (1955) 83 writes הדרך but the fragment is broken away at this word so only the tops of the ר and the ך are visible. In the photo the ד is also unclear. VanderKam, (1977) 77 read it as הדרֹךְ to which I have no great objection.

101 ኣስስ for ኣስመ .

102 ኣስመ፡ዐሬበ፡ፀሓይ : *deciderat enim sol.* It has been necessary to duplicate a small section of the work of VanderKam which he did for the sake of the Hebrew fragments themselves. The present thesis has a different reason for examining the fragments as it searches for clues to the beginning of the day. However, as VanderKam dealt with the Ethiopic and Latin texts of Jubilees in his assessment of the fragments I have checked my work against his and acknowledge my debt.

103 This observation was overlooked by Morgenstern, (1955) 49n2.

104 Davenport, (1971) 57ff.

105 Levi and Judah are presented to their grandparents, Isaac and Rebecca, by their father Jacob. Both boys receive a blessing from their grandfather.

106 Jacob and his two sons journey on the šarq on month VII to Bethel (Jub 31:3) but days pass before the dream at Jub 32:1.

107 It will be demonstrated below that the sources behind chapter 49 are composite and verses 10-12 are late.

108 Ch. Barth, בֹּקֶר bōqer, *Theological Dictionary of the Old Testament* (ed. G. Johannes Botterweck and Helmer Ringgren; Vol. 2, Grand Rapids, Michigan: 1975) 222-223.

109 Baumgarten, (1958) 355-360, has ignored this MSS difference.

110 MS A has given the numbers correctly at verses 2 and 4 in numeral form. For verse 14, MS A reads ፲ወ፰ and for verse 15, MS A reads ፲ወ፪

111 Testuz, (1960) 153, has followed this interpretation,"... la nuit précédant l'institution de la fête" (Day of Addition).

112 This was also ignored by Baumgarten, (1958) 355-360.

113 S. Zeitlin, "The Beginning of the Day in the Calendar of Jubilees," *JBL* 78 (1959) 154.

114 Zeitlin, (1959) 154.

115 For a reply to Zeitlin see Baumgarten,"Reply," *JBL* 78 (1959) 157.

Once again as would be expected, MS A diverges from the others. While the MSS have "the 23rd of this month" (እዝወርሳ), MS A reads "the 23rd which is the next day" (ወሰኑዩ). This apparent change in

MS A from እዝወርኅ to ወሰኑዩ appears to be a conscious desire to render the time of the night of the 23rd as being after the daylight hours of the 22nd. The opposite is implied in the other MSS.

It can be concluded that for MS A the day began in the evening. For the other MSS the day began in the morning. Both Baumgarten and Zeitlin are partly right, but for the wrong reasons. By separating MS A from the rest, even in such a technical discussion, sense can be made of the material.

116 Zeitlin, (1959) 154.

117 Charles, (1895) 123.

118 Drinking of wine with the meal, Jub 49:6.

119 The dress of the participants (Exod 12:11) and the unleavened bread which is to accompany the meal (Exod 12:15ff).

120 Jaubert, (1957) for whom the Passover date is very important, does not deal with the traditions in this chapter. Davenport, (1971) while developing a tradition theory for Jubilees, has ignored the suggestion of Segal (1963) 234, that the entire chapter 49 is from a different hand. Davenport has placed it within his Angelic Discourse which covers the major part of Jubilees from Jub 2:1 to 50:4. See Davenport, (1971) 11,69. He does not suggest any divisions within the chapter itself. This is most remarkable in view of the temple references in the chapter, as Davenport has a "Temple-Oriented Redactor." Testuz, (1960) 143-146, 160 does not suggest an editor for the chapter.

121 Segal does not account for verses 16-23 in his divisions.

122 Segal, (1963) 20.

123 The question of the date of the book has been discussed by VanderKam, (1977) in his final chapter and will be considered below.

124 Segal, (1963) 20.

125 Segal, (1963) 234.

126 Chaps. 16, 31, 44 and 49.

127 Chaps. 2 and 23.

128 Chaps. 9, 38, 39, 40 and 43.

129 Segal, (1963) 234.

130 See above, notes 126 and 127.

131 Segal, (1963) 236.

132 Segal, (1963) 238.

133 Segal, (1963) 237.

134 Morgenstern, (1955) 57n6 assumes this to be Passover and Maẓẓot.

135 Zeitlin, (1959) 155.

136 Zeitlin, (1959) 155.

137 So Testuz, (1960) 145 who says the slaughtering and eating of the animal happens in a very brief period of time; from 7PM to 2AM. Segal, (1963) 233 says the killing occurs between 2PM and 6PM and the meal is eaten before 2AM. This difference of opinion comes from their interpretations of Jub 49:10-12.

138 Charles, (1902) 255n.

139 Many factors such as a rainy, cloudy day could affect the determination of the sunset. The period בין הערבים was a puzzle to the Rabbis. See m. Pesah 5,1. For a discussion of three possible meanings for בין הערבים see J.P. Hyatt, *Exodus* (New Century Bible) (London: 1971) 132. He reaches the same conclusion as Charles, (1902) 255n, and cites identical primary sources but does not acknowledge an indebtness. Krüger, (1858) 298-299 attempted to solve the problem by suggesting that יום and לילה were 12-hour periods each with three divisions of four hours and the last division of the יום and the first division of the לילה was ערב while the last division of the לילה and the first of the יום was בקר. Thus ערב was from 2PM until 10PM and בקר was from 2AM to 10AM causing the period בין הערבים to fall between the evening of the day and the evening of the night. It appears that בקר and ערב, while operating as technical terms for sunrise and sunset, can also refer to larger periods of time. See *BDB* 133-134, 787-788. Krüger on this point has been followed by Charles.

140 There are errors in Charles, (1902) 255n and Charles, (1913) in loc. Charles interprets verse 12 "*to* the third part of the night" as ending at 10PM. If he counted 2PM to 6PM, the last part of the day, as being also the first part of the night, the error could be accounted for. But Passover is to be observed *from* the third part of the day *to* the third part of the *night*, i.e. from 2PM(?) to 2AM.

141 Segal, (1963) 233n6. This is much less precise than Exod 12:6 and Jub 49:10-12 which will be discussed below.

142 See note 139 above.

143 Charles, (1902) 255n.

144 See m. Pesah 10, 1-4 and Segal, (1963) 259.

145 VanderKam, (1979) 390.

146 Feast of Weeks is mentioned or alluded to in Jub 6:1,18,20,21; 13:25; 14:1,20; 15:1,2; 16:13; 17:1; 22:1,4; 29:7; 44:1,4,8.

147 Jaubert, (1963) 100-105.

148 Jaubert, (1963) 103.

149 Jaubert, (1963) 104.

150 This is against Zeitlin, (1939-40) 6 who suggests שבועות is derived from שבועה (oath) not שבוע(week) in Jubilees. See Zeitlin, (1957) 220 where his position remains unchanged.

151 G. Kretschmar, "Himmelfahrt und Pfingsten," *Zeitschrift fur Kirchengeschichte* 66 (1954-55) 209-253 esp. 227 has followed Zeitlin but Noack, (1962) 94n34 is unconvinced. Testus, (1960) 148 agrees with Zeitlin. J. van Goudoever, *Biblical Calendars* (Leiden: 1961) 139-144 is hesitant about this association. See below, note 154.

152 See above note 150.

153 See Jub 6:3ff; 14:11.

154 Dillmann, (1865) 362-363.

155 Davenport, (1971) 50n2.

156 Charles, (1902) 53.

157 Epstein, (1891) 7-8.

158 This is contrary to b. Ros. Has. where Isaac is born on Passover. See Jaubert, (1963) 103n43. The renewal idea must be preserved and so III/15 is used in Jubilees. See Maurice Simon, "Rosh Hashanah," in *The Babylonian Talmud. Seder Mo'ed VII* (ed. Isodore Epstein) (London: 1938) 39.

159 Jaubert, (1963) 105. See Charles, (1902) 10 and Davenport, (1971) 48 who argue correctly that it does not have to be futuristic.

160 See Jub 15:24. Seed here includes the house of Abraham, even slaves. In the more restricted sense seed is only carried by one son. In this case, Isaac.

161 The concept of the right of the first born, who is not in fact the first born son, is well known from the Jacob-Esau story. The first born by birth (Esau) surrenders the right of the first born and loses the privileges of the position to the second born (Jacob) who carries on the covenant promise. In Jubilees the plot is complicated by Abraham's siding with Jacob and Rebecca against Isaac and Esau (Jub 19:16). The seed of Jacob (i.e. Israel) is presented in a telescoped genealogy (Jub 19:24). For similar shortened lists see T. Benj. 10:6-9; T. Jud. 25:1ff; Sir 44:16ff; Heb 11: 5-7. For a discussion of the lists, see G.W.E. Nickelsburg, *Resurrection, Immortality and Eternal Life in Intertestamental Judaism* (Cambridge, Mass: 1972) 142. The concept will be considered briefly below where the Judah/ Tamar story is discussed.

162 Judah Goldin, "The Youngest Son or Where Does Genesis 38 Belong?" *JBL* 96 (1977) 27-44. On p. 27n4 he incorrectly cites Jub 40:1 for 39:1. See also S. Talmon and M. Fishbane, "Aspects of the Literary Structure of the Book of Ezekiel," *Tarbiz* 42 (1972/73) 35-38 for a discussion of the technique of *Wiederaufnahme*, and Curt Kuhl, "Die Wiederaufnahme - ein literarkritisches Prinzip?" *ZAW* 64 (1952) 1-11.

163 The *Wiederaufnahme* in Gen 37:36 and 39:1 is

פרעה שר הטבחים (ל)פוטיפר סריס

By repeating the phrase in 39:1 the text critic can assume that the verses between the first citation (37:36) and the second (39:1) are an addition. Since Jubilees ignores the addition, it also ignores Gen 39:1.

164 But see Deut 20:14f; 21:10-14.

165 See Exod 34:16; Deut 7:3.

166 Ezra 9:2.

167 See Hans Kosmala, "The Three Nets of Belial," *ASTI* 4 (1965) 91-113 for the suggestion that the sanctuary is not the physical temple but the human body. He suggests that this belief was held at Qumran and by Paul in the New Testament.

168 The "breach" birth of Perez changes the supposed birth order. See also Jub 24:7, "And Jacob became the elder," where the narrative explains the reversed birth order.

169 See the discussion of the ancestry of Tamar where it is suggested that she was thought to have been a Canaanite in Genesis, by J.A. Emerton, "An Examination of a Recent Structuralist Interpretation of Genesis XXXVIII," *VT* 27 (1976) 91-93.

170 Goldin, (1977) 28n5. VanderKam, (1977) 116-123 and VanderKam, "The Textual Affinities of the Biblical Citations in the Genesis Apocryphon," *JBL* 97 (1978b) 74.

171 Goldin, (1977) 28, where he presents the confusion of the Rabbis concerning this story.

172 Jaubert, (1963) 103.

173 See Norman C. Habel, *Literary Criticism of the Old Testament* (Philadelphia: 1971) 70-71, who noted that Noah's covenant is set in nature (Gen 9), Abraham's in man (Gen 17) and the Sinai covenant (Sabbath) is set in the cult (Exod 31:12-17).

174 Jer 31:31-36 is clearly alluded to by the author of Jubilees. God gives order to the sun, moon and natural phenomenon in general. If this fixed order is departed from, then Israel will cease (Jer 31:35-36). This is very close to the thought of Jub 6:32-38.

175 Other commandments are written on heavenly tablets which are to be kept for eternity. These are the period of uncleanness after a birth (Jub 3:8-11), nakedness (Jub 3:31), tithes (Jub 13:25-26), marriage of elder daughter before the younger (Jub 28:6), and punishment for murder (Jub 4:5). Also Sabbath keeping (Jub 2:33), eating of blood (Jub 6:12), and sexual irregularities (Jub 30:7,10,16; 33:13, 15-18) are eternal sins if broken.

176 This was pointed out by Jaubert, (1963) 108. See the discussion of the name שבע באר above.

177 The use of the cardinal ካሐዲ: makes the sense explicit.

178 Dillmann, (1865) 688.

179 The expression መንግሥተ: ወክህነተ: similar to ממלכת כהנים in Exod 19:6 is emended by Charles to agree with the Latin *regnum sacerdotale*: መንግሥተ: ዘክህነት:

180 The expression ተክለ:ርትዕ:(ጽድቅ:)(Latin: *plantatio veritatis*) is found in Jub 1:16; 1 Enoch 10:16; 93:2,5. In 1 Enoch it is clearly the true Israel that has arisen from the loins of Abraham. For the Ethiopic texts, see M.A. Knibb, *The Ethiopic Book of Enoch* (Oxford: 1978) vol.1, 37, 348 and 350. The Aramaic fragments are considered in vol. 2, (1978) 90 and 223. For a reconstructed text of the Aramaic fragments and the Plates of the same, see Milik, *The Books of Enoch, Aramaic Fragments from Qumran Cave 4* (Oxford: 1976) 189-190 and Plate XIf; 263-265 and Plate XII, iv. c.

181 See Isa 61:3. The expressions אילי הצדק (oaks of righteousness), נצר (shoot) and צמח (branch) are common.

182 Shozo Fujita, "The Metaphor of Plant in Jewish Literature of the Intertestamental Period," *JSJ* 7 (1976) 30-45.

183 ... ይኩን: ከማሁ: ለዘገብረ: ክልኦ:

184 Fujita, (1976) 34.

185 See above, note 167.

186 Charles, (1902) 150n27. The concept of world eras will be considered in Chapter 3.

187 ዘንተ: ቤተ: ሐጎል ኩ: ኢተ: ስመ: ኤንዛር: ክንየ: ለዕለሁ: በዲበ: ምድር: ተውህበት: ለክ: ወለዘርኤክ: ለዓለም::

This is the house I have built for myself so that I might place my name upon it upon the earth; it is given to you and your seed forever (Jub 22:24a).

188 Testuz, (1960) 33-34.

189 Fujita, (1976) 36.

190 Sanders, (1977) 362-363.

191 Sanders, (1977) 363.

192 Sanders, (1977) 363.

193 See below Part 2 on Genealogy.

194 Dillmann, (1906) 392. The prefixed form is ኢያዐ:

195 Dillmann, (1865) 193#3a and Dillmann, (1906) 394.

196 This is a most obvious instance of genealogical telescoping, as Isaac is noticeably bypassed. See R.R. Wilson, *Genealogy and History in the Biblical World* (New Haven, Conn: 1977) 33-36. In Jub 23:2 after the covenant renewal ceremony, Jacob is lying in the bosom of Abraham, which shows their close relationship. See T.F. Glasson, *Greek Influence in Jewish Eschatology* (London: 1961) 84.

197 This is followed by a judgment on idol worshippers who "have no place in the land of the living" (Jub 22:23). Davenport, (1971) 53n3 has suggested that these two originally separate traditions are combined here because of the sexual aspects of Canaanite religion which are to be avoided. He concludes that the message for the reader is to encourage him to avoid contact with the Gentiles. Zeitlin, (1939/40) 30, found this attitude in the author quite offensive. It seems, however, that there is a more immediate narrative purpose. If Jacob marries a Canaanite the line commanded to be pure will fail. While it may have more wide-reaching implications, the story demands this injunction. It must be viewed in the light of chapter 25 and the Esau story there.

198 The unique role and the importance of women in Jubilees will be discussed more fully in Chapter 2. See the blessing by Isaac in Jub 27: 9-11 which is secondary to that of his wife merely repeating Gen 28:1-4.

199 T.O. Lambdin, *Introduction to Classical Ethiopic (Ge'ez)* (Ann Arbor, Michigan: 1978) 421 and Dillmann, (1865) 700.

200 Charles did not see this as a reference to God dwelling in man even though this is explicit in the rest of the verse, "And may the God of righteousness dwell within them." Charles was referring to a physical temple.

201 Testuz, (1960) 152-153, has noted that in Jubilees there is a remarkable use of number symbolism with the use of seven and 22. These are used for Jacob and Tabernacles. Tabernacles is seven days in duration and takes place on VII/22; animals sacrificed are multiples of seven. Jacob

is the seventh special patriarch from Adam and the 22nd in the complete genealogy.

It should be noted that the traditional interpretation of Tabernacles as a wilderness wandering festival is completely missing in Jubilees. See Noack, (1962) 79 and Lev 23:34-44; Num 29:12-40.

202 VanderKam, (1977) 270ff.

203 See Morgenstern, (1955) 65; J. Obermann, "Calendric Elements in the Dead Sea Scrolls," *JBL* 75 (1956) 265-297: E. Kutsch, "Der Kalender des Jubiläenbuches und das Alte und das Neue Testament," *VT* 11 (1961) 39-48; David Hill, "Δίκαιος as a Quasi-Technical Term," *NTS* 11 (1965) 300; Sanders, (1977) 385; L. Ginzburg, "Eine unbekannte jüdische Sekte," *MGWJ* 56 (1912) 676; Chaim Rabin, *Qumran Studies* (Oxford: 1957) 80ff, Rook (1981).

204 The best critical edition of 1 Enoch is that of M.A. Knibb, *The Ethiopic Book of Enoch* (2 vols.; Oxford: 1978).

205 See Benno Przybylski, "The Identity of the Calendars of 1 Enoch, Jubilees and the Essenes: Theory or Fact?" (Paper presented to the November 1979 SBL Meetings, N.Y.) 25pp., cited in Rook, (1981) 87n12.

206 Once again this raises the question of intercalation. J.B. Segal, "The Hebrew Festivals and the Calendar" *JSS* 6 (1961) 91, when dealing with the question of the relative difficulty of intercalating in 360 and 364-day systems says that the 364-day calendar is the least accurate. The 360 would be corrected every few years by intercalation. A construction of the calendar using the Sabbath unit of seven days is excessively rigid. Correction is much more difficult. Against Jaubert, he concludes that "we cannot suppose that this calendar of 364-days was ever put into practical use."

Segal's argument, however, need not be accepted. The 364-day system is perfectly logical and reasonable and, although in a generation or so some problems would arise, this does not mean that the calendar (non-intercalated) could never have been used. It will be shown below that while it is a possible practical calendar, its purpose is otherwise.

207 See R.T. Beckwith, "The Modern Attempt to Reconcile the Qumran Calendar with the True Solar Year," *RQ* 7 (1971) 379-396 for a survey of the major suggestions on intercalation.

208 This is additional support for the argument that Jub 6:29-38 summarizes and emends the 1 Enoch calendar as suggested by Segal, (1957) 290n5.

209 See VanderKam, (1977).

210 In word reconstructions the symbol ṯ is used for a partly visible letter which is certain and ṯ is used when the letter is uncertain. This follows the convention detailed in D. Barthélemy and J.T. Milik, *Qumran Cave 1* (Discoveries in the Judaean Desert) (Oxford: 1955) 48. Since both Barthélemy and Milik are responsible for separate sections, (Barthélemy, 49-76; 108-117; 151-152 and Milik 77-107; 118-150; 153-155), they are cited as two separate works in the notes. E.g. Barthélemy, (1955) 49 and for Milik, (1955) 77.

211 On the addition of the third person singular masculine suffix see Dillmann, *Ethiopic Grammar* (London: 1907) 371. The fragment has been published in A.S. Van der Woude, "Fragmente des Buches Jubiläen aud Qumran Höhle XI (11QJub), *Tradition und Glaube: Das Frühe Christentum in seiner Umwelt* (Gottingen: 1971) 142-143 and Plate VIII.

212 J.T. Milik, "A propos de 11QJub," *Biblica* 54 (1973) 78.

213 See Van der Woude, (1971) 144.

214 See Van der Woude, (1971) 144-145 and Plate VIII.

215 Milik, (1955) 83n.

216 VanderKam, (1977) 76.

217 VanderKam, (1977) 67.

218 Talmon, (1958) 163.

219 E.J. Bickerman, *Chronology of the Ancient World* (London: 1968) 51. While Josephus (*Ant* I, iii, 3) is aware of two yearly beginnings, one in Tishri and an ecclesiastical beginning in Nisan, and Mishna Rosh-ha-Shanah I.1 speaks of four new years, these do not suggest conflicting calendars but rather that different beginnings have different purposes. There is no element of disagreement or inexactitude in these calendars.

220 Schürer, (1973) 591. It is interesting to note that the 360-day 12-month system of 1 Enoch does not produce 30-day months but rather six months of 29 days and six of 30 days (1 Enoch 78:15-16).

221 Talmon, (1958) 178.

222 VanderKam, (1977) 271. While this is a major fault in his work, the scholarship of the thesis should not be overlooked. It is detailed and complete and has made a valuable contribution to Jubilees studies. His more recent article (1979) does not deal with the problem of this relationship even though it considers the problem of the calendar.

223 VanderKam, (1977) 270ff.

224 Jack Finegan, *Handbook of Biblical Chronology* (Princeton: 1964) 56, states that the system would be out 35 days in 28 years. I am not convinced that a problem would be noticed in such a brief time.

225 Some of the supporters of practical identification and intercalation are: E. Vogt, "Kalendar fragmente aus Qumran," *Biblica* 39 (1958) 72-77; K.G. Kuhn, "Zum Essenischen Kalendar," *ZNW* 52 (1961) 65-73; Leach (1957) 392-397; Jaubert, (1957); Talmon, (1958); and Leaney, (1966) 94 who follows Talmon closely; Finegan, (1964) 56 follows the argument of two Qumran calendars, an everyday 365.26 calendar and a 364-day calendar for festival observances; J. Bowman, "Is the Samaritan Calendar the Old Zadokite One?" *PEJ* 91 (1959) 28, wrongly suggests that the lunar-solar calendar difference between Qumran-Jubilees (solar) and the Rabbis (lunar) is a matter of emphasis on either sun or moon. The suggestion that the Jubilees calendar is solar because of the

emphasis on the sun which ripens the Omer is simply not supported by the texts; Zeitlin, (1973) 186 gives no evidence for intercalation but only a reason.

Some supporters of a theoretical calendrical identification are: Morgenstern, (1955) 64; J.M. Baumgarten, "The Counting of the Sabbath in Ancient Sources," *VT* 16 (1966) 280; P. Grelot "Soixante-dix semaines d' années," *Biblica* 50 (1969) 185, Segal, (1957) 251 and Segal, (1961) 91.

226 At Jub 8:3 Kainan observes the omens of the sun, moon and stars; Jub 12:17 Abram observed the luminaries to determine the weather; and Jub 14:13, 17; 21:10 are references to sunset.

227 Leaney, (1966) 86-87 offers three points on the question of authority in Jubilees in his assessment of the calendar: 1) it rests upon divine authority; 2) it belongs to the ancient divinely bestowed wisdom of the patriarchs and 3) (which is a negative point) Jubilees rejects the Hellenistic world. He suggests that Jub 6:34 and Dan 7:25 are reactions to calendar changes by the Seleucid rulers, especially Antiochus Epiphanes. The question of the date of the Aramaic of Daniel has been revived recently by the Aramaic finds at Qumran. For a recent discussion of the problems see G.F. Hasel, "Is the Aramaic of Daniel Early or Late?" *Ministry* (Jan 1980) 12-13 where he gives an extensive bibliography. See also Segal, (1957) 293 who also sees Jub 6:32ff as a reaction to the influence of a 365.25-day Seleucid calendar.

228 K.G. Kuhn, *Konkordanz zu den Qumrantexten* (Göttingen: 1960) 225 1QM 18:5; 1QH 8:22; Book of Noah 3:5; Book of Mysteries I;1:6; 4QpIsa^{a} 1:6; CD 10:15.

229 Talmon, (1951) 555.

230 Talmon, (1951) 555. This, however, seems to contradict his later suggestion ((1958) 185) that since the Sabbath is permanently fixed in the "normative Jewish" and in the Qumran sects' calendar, and both have a seven-day week with the days occurring in the same order, then "profanation of the Sabbath" was not related to the *day* of observance, but rather to certain actions not permissible on the Sabbath.

231 Talmon's article, (1951) 549-563 is most enlightening in its assessment of the possible reasons for the different calendars within Judaism. The significant factors are three: first, "Locality" as in the North-South calendrical dispute in 1 Kgs 12:32-33 and the different calendars that emerged in the disapora. (See further F.S. North, "Four-month Season of the Hebrew Bible," *VT* 11 (1961) 446-448). Second, "Social Setting" which explains the difference between agricultural and urban calendars; and third, "prerogative of an authority figure to control the calendar" which was a priestly function. Talmon (1951) 561; Segal, (1957) 259-260 suggests that the calendar was a secret kept by the priests. See also Obermann, (1956) 286 who notes the expression "secret of the calendar" סוד העיבור is found in b. Ros. Has 20b. M. Jastrow, *A Dictionary of the Targumim, The Talmud Babli and Yerushalmi, and the Midrashic Literature* (New York: 1975) 1066 adopts the more traditional translation "the Council (Sanhedrin) on Intercalation."

232 So for example, Milik, (1955) 85 and Plate XVI, 1019 Fragment 3. The line reads את חדרי הבית כחדודי השמש. The word השמש is very clear, but it is not a calendar reference. It refers to the rays of the sun shining into the rooms of a house. This is perhaps a slightly different account of the 1 Enoch 106 tradition. See J.T. Milik, "The Dead Sea Scrolls Fragment of the Book of Enoch," *Biblica* 32 (1951) 393-400 and J. Fitzmyer, *The Genesis Apocryphon of Qumran Cave 1: A Commentary* (Rome: 1971) 187.

A second non-calendrical reference is found in J.M. Allegro, "More Isaiah Commentaries from Qumran's Fourth Cave," *JBL* 77 (1958) 215-221. The line reads, ...וכ בכול אורו כשמשל מהמה הנעדרות. The ל has been partially erased but it is still quite clear. The preposition looks more like a ב than a כ.

A third non-calendrical reference is found in S. Zeitlin, *Zadokite Documents* (Philadelphia: 1952) Plate X, which reads יהיה גלגל השמש.

A fourth reference is not actually present in the text. See Milik, (1955) 103 and Plate XXI. In Milik's transliteration the sun is shown as כשמש but the word should have been more correctly shown as כש[ ] as there is a lacuna after the שׁ in the photo. The photo itself is extremely unclear.

233 1QpHab xi, 4-8. See M. Burrows, *The Dead Sea Scrolls of St. Mark's Monastery* (vol. 1, New Haven: 1950) and Geza Vermes, *The Dead Sea Scrolls* (London: 1977) 241-242.

234 Talmon, (1958) 180. Supported by G. Vermes, *The Dead Sea Scrolls: Qumran in Perspective* (London: 1977a) 177.

235 H.H. Rowley, "The Teacher of Righteousness and the Dead Sea Scrolls," *BJRL* 11 (1957) 121.

236 A. Dupont-Sommer, *The Jewish Sect of Qumran and the Essenes* (E. Tr. by R.D. Barnett) (London: 1954) 32-37.

237 Josephus *Ant* XIV, 4 speaks of Pompey's sack of Jerusalem in the third month on the day of the fast, not the seventh.

238 Vermes, (1977a) 177.

239 Talmon, (1958) 178n32 has been followed by Hengel, (1974) 157n811, but Hengel does not cite Talmon.

240 See M. Burrows, (1950) vol. 2, fasc. 2, Plate X. Final ם is not used, which has caused scholars to look at the passage with much concern. Scholars have offered various solutions, some of which are related to the calendar question. Of these, Talmon, van Goudoever and Milik deserve consideration.

Talmon says that while the 364-day solar calendar is not stated explicitly it is "obviously implied" in the sect's writings. He reaches

this conclusion on the basis of a restoration of the phrase המ גדול, which he proposes to read as גדול(אור ה)המ. The מ is thus viewed as a short-form for המאור. In line 1 of the same column there is an א which is an abbreviation for אל and in line 4 a נ is symbolic of אמן.

The argument of Talmon is circular which opens it to scepticism. He suggests that Jub 2:9 is a link to 1QS x, 4. He has emended 1QS using Jubilees and then on the basis of the emendation seeks to identify 1QS x, 4 with the Jubilees calendar. It cannot be denied that the sun is a unique source of light (Hengel, (1974) 234), but it likewise cannot be assumed that this necessarily means that a solar calendar is being referred to in the literature of the sect.

J. van Goudoever, *Biblical Calendars* (Leiden: 1961) 64 finds the numerical value of these abbreviations which is 91 to be the key to the 364-day Jubilees calendar. This certainly is the duration of a season, but the suggestion that the נ = 50 is related to both the Feast of Weeks and the jubilee is suspect, as the jubilee in Jubilees is 49, not 50 years, and so the abbreviations cannot be the clue to the system of Jubilees.

Milik, "Notes d'epigraphie et de topographie palestiniennes," *RB* 67 (1960) 410 ff, supported by Leaney, (1966) 242, says that the reading יום is supported by 4QSb and 4QSd. The reading "great day," he suggests, refers to an intercalary day. If this is true it is the only mention of intercalation in the Qumran texts (Vermes, (1977) 177). This suggestion, then, is highly unlikely.

Other scholars have moved to non-calendrical conclusions. Wernberg-Møller, (1957) 142, has called this phrase the most disputed text in the entire manuscript. Even so, he has suggested two possible interpretations. First, the phrase המ גדול may refer back to the preceding verb בהתחדשם which alludes to the renewal of the new moons. Second, המ גדול could refer to the expression which follows קודש קודשים, a reference to God. He finds many Sirach parallels. Both suggestions are possible.

Leaney has suggested three possible emendations: יום, הם and זו. The difficulty is in the quality of the scroll itself. The initial ה is very poorly made. There is a crease which runs just to the right of the ה and this crease might have affected the letter. There are, however, breaks under the crown of the letter which would not be explained by a vertical crease. These breaks are quite visible to the naked eye. Leaney, (1966) 241, has rejected the suggestion of Habermann, עדה ועדות (Jerusalem: 1952) 63, that the word should be read as המגדול or that it should be read זֻם גדול which Habermann interprets as the Mishnaic word *zîv* = glory. While the translation "great is their glory" makes excellent sense, it is still speculative and the use of final ם is problematic.

It is impossible to propose a solution to this dilemma and so one cannot expect to build on this argument. Before one can assert that the

Qumranites used a solar calendar, more substantial evidence than has been presented here must be found.

241 P.R. Ackroyd, *I & II Chronicles, Ezra, Nehemiah* (London: 1973) 84, suggests that the list may be linked to the Maccabean period. This would account for Ezek 44:15ff, where descendants of Ithamar are unknown. One Daniel, a son of Ithamar, leaves Babylon with Ezra (Ezra 8:2), but Daniel is mentioned in a list of household heads and not as a priest. I am not inclined to think against Ackroyd that the list is ancient and the line of Ithamar had either died out or was so secondary to the Zadokites by the time of Ezekiel that he could ignore them.

242 So Paul Winter, "Twenty-Six Priestly Courses," *VT* 6 (1956) 215-217; Leaney, (1966) 92-93.

243 E.L. Curtis, *A Critical and Exegetical Commentary on the Book of Chronicles* (Edinburgh: 1910) 270.

244 Milik, "Le travail d'édition des manuscrits du désert de Juda," (Volume du Congrès Strasbourg, 1956) *SVT* 4 (1957) 25.

245 Milik, *Ten Years of Discovery in the Wilderness of Judaea* (London: 1959) 108.

246 The identification of the Qumran sect with the Essenes has not gone unchallenged. See the discussion in Sanders, (1977) 385; M.H. Gottstein, "Anti-Essene Traits in the Dead Sea Scrolls," *VT* 4 (1954) 142, says "Essene identification is highly improbable unless we are prepared to allot the name 'Essenes' a meaningless indefiniteness." However, Vermes, (1977) 125-136, with some reservations, concludes that their identification "possesses a high degree of intrinsic probability," (p.130). These cautions should not be taken lightly and, until proven for certain, the term 'Qumran sect' rather than 'Essene' should be used.

247 Milik, (1959) 108 and (1976) 274.

248 Milik, (1959) 108.

249 Talmon, (1958) 175-176.

250 E. Vogt, "Antiquum kalendarium sacerdotale," *Bib* 36 (1955) 403-408.

251 Vogt, (1955) 403.

252 See especially Y. Yadin, (1962) 204-206.

253 See the discussion and bibliography in P.R. Davies, *1QM, The War Scroll from Qumran. Its Structure and History* (Rome: 1977) 26.

254 See the diagrammatic reconstruction in Davies, (1977) 26.

255 A. Dupont-Sommer, *The Essene Writings From Qumran* (Oxford: 1961) 171n4; Milik, (1959) 111; Leaney, (1966) 89ff; Talmon, (1958) 162ff.

256 Obermann, (1956) 296.

257 M.R. Lehmann, "Ben Sira and the Qumran Literature," *RQ* 3 (1961) 111.

258 Lehmann, (1961) 111.

259 The hypothesis of Lehmann, (1961) 111-112, that the משמרות have increased from eight to twenty-four, with evidence for twenty-three and twenty-five, cannot be substantiated.

260 Przybylski (1979) 17ff. I think, however, that he means the 364-day calendar when he uses the term "solar". This thesis has been partially supported by Father Arthur McCrystall in his thesis "Studies in the Old Greek Translation of Daniel," (unpublished D.Phil. Thesis, Oxford; 1980) where he has found that the chronology of Jubilees and Daniel (MT) when added together and the missing years between the end of Jubilees (entrance into Canaan) and when the 70 year exile in Babylon are included, the number total is exactly 80 jubilees.

261 Yigael Yadin, ed. *The Temple Scroll* (3 vols., Jerusalem: 1977) (Hebrew).

262 Baruch A. Levine, "The Temple Scroll: Aspects of its Historical Provenance and Literary Character," *BASOR* 232 (1978) 8; Jacob Milgrom, "'Sabbath' and Temple City' in the Temple Scroll," *BASOR* 232 (1978) 5; Milgrom, "Studies in the Temple Scroll," *JBL* 97 (1978a) 518; and Milgrom, "The Temple Scroll," *BA* 41-43 (1978b) 112-113.

263 Milgrom, (1978b) 113.

264 Levine, (1978) 7-8.

265 See Yadin, (1977) vol. 2, cols. XIII-XXV and Johann Maier, *Die Tempelrolle vom Toten Meer* (München: 1978) esp. 29-37.

266 Cited in Levine, (1978) 9.

267 Milgrom, (1978) 25.

268 Milgrom, (1978) 25.

269 Levine, (1978) 9, a semantic distinction which is challenged by Milgrom, (1978) 25.

270 VanderKam, (1977) 399-402.

CHAPTER 2

[1] Davenport, (1971) 82n1.

[2] W. Lowndes Lipscomb, "A Tradition from the Book of Jubilees in Armenian," *JJS* 29 (1978) 149-163, esp. p.153. He shows that these chronographers are likely to have drawn their information from Annanios, a fifth-century monk.

[3] See the discussion in J.A. Fitzmyer, *The Genesis Apocryphon of Qumran Cave I* (Rome: 1971) 16-18.

[4] Wilson, (1977) 136ff.

[5] So for example, Charles (1902) *ad.loc.* The earliest reference I have been able to trace for finding meaning in the names of the wives in Jubilees is in C.D. Ginzberg, "The Book of Jubilees," *A Cyclopaedia of Biblical Literature* (ed. John Kitto) vol. 2 (1864) 668-671. He cites עצורה 'restrained,' ברכה 'blessing' and עדנה 'pleasure'. The names of these wives of the line of Seth express beauty and virtue. Cain's wife expresses just the opposite in her name: און 'vice' (p.170).

[6] Gen 21:6. See Burke O. Long, *The Problem of the Etiological Narrative in the Old Testament* BZAW 108 (Berlin: 1968) 87-94.

[7] Lambdin, (1978) 8-9.

[8] So Charles, (1902) and (1913).

[9] Dillmann, (1865) 821, lists five possibilities for *kāle'* [ካልኣ፡]: (1) diversus, (2) alius, (3) secundus, (4) alter, (5) socius.

[10] Lipscomb (1978) 53.

[11] Ethiopic Gen. 4:17 reads ሄኖክ፡ (Hēnox).

[12] Jub 4:8. There is a Hebrew Fragment from Qumran Cave 11, 11QJub 1 = Jub 4:7-11. The fragment is published by A.S. van der Woude, "Fragmente des Buches Jubiläen aus Qumran Höhle XI (11QJub)," *Tradition und Glaube. Das frühe Christentum in seiner Umwelt* (eds. G. Jeremias, H.W. Kuhn, and H. Stegemann; Göttingen: Vandenhoeck & Ruprecht, 1971) 140-146, esp. pp. 140-143 and Plate VIII. J.T. Milik, "A propos de 11QJub," *Bib* 54 (1973) 77-78, suggests some alternative restorations, but he does not dispute van der Woude's suggestion concerning אזורה.

[13] Lipscomb, (1978) 156. His citation reads Gen 2:19 but should be corrected to read Gen 2:18.

[14] In Plate VIII, (van der Woude, 1971), the final ה is not clear but can be assumed from the context. It is followed by בתו and so אזוֹרָה is implied.

[15] Lipscomb, (1978) 157.

16 Charles, (1902) 33 n.4.

17 Charles, (1902) 33 n.15.

18 Charles, (1895) MS A reads ገራኤ፡.

19 Charles, (1902) makes no distinction between ኀኖኽ፡ and ሄኖክ፡ in translation where both are rendered as "Enoch." As noted above, (p. 90) this is unfortunate as it is now impossible simply by examining the name in the English edition to know to which patriarch the text is referring. It would have been much better if Charles had made a distinction in the English translation so that confusion could be avoided.

20 J.T. Milik, *The Books of Enoch. Aramaic Fragments of Qumran Cave 4* (Oxford: Clarendon Press, 1976) 42, cites the tradition of the name in Enoch and translates the name as "my Paradise," as she was probably a resident of Paradise (Eden). This is, of course, a possible translation.

21 Davenport, (1971) 81-86.

22 Davenport, (1971) 81.

23 Davenport, (1971) 82.

24 Davenport, (1971) 10ff.

25 For two excellent discussions of the textual problems encountered with the Apocalypse of Weeks in 1 Enoch, see M. Black, "The Apocalypse of Weeks in the Light of 4Qen^{g}" *VT* 28 (1978) 464-469 and F. Dexinger, *Henochs Zehnwochen-apokalypse und offene Probleme der Apokalyptikforschung* (Leiden: 1977) 102f.

26 Davenport, (1971) 82.

27 H. Odeberg, "'Ενώχ" *TDNT* 2, 556-560, is uncertain whether all the Enoch traditions in Jubilees are taken from 1 Enoch exclusively. This does not affect the position taken above, as Odeberg is probably referring to the other Enoch traditions found elsewhere in Jubilees.

28 For the transliteration technique see endnote 7 above.

29 Lipscomb, (1978) 158, incorrectly views this Lamech as identical to the Lamech in Gen 4:19. So Wilson, (1977) 161-163, and M.D. Johnson, *The Purpose of the Biblical Genealogies* (Cambridge: 1969) 7-14. Also in 1QapGen ii, where the wife of Lamech is also בתאנוש, no etymology is given. See Fitzmyer, (1971) 82-83 for a discussion of the form of the name. Testuz, (1960) 188 believes quite rightly that Bat-Enoš in 1QS ii is from the same tradition as the name in Jubilees.

30 ኀምዘራ፡ might have been expected, especially if the Ethiopic translator knew some Hebrew. This, however, cannot be determined.

31 There is some disagreement between the scholars regarding the *Vorlage* behind the Ethiopic text of Enoch. On the one hand, Knibb, (1978) vol. 2, pp.5, 15, 22, 37-46 and E. Ullendorff, 'An Aramaic "Vorlage" of the Ethiopic Text of Enoch?' *Atti del Convegno Internazionale di Studi Etiopici* [Accademia Nazionale dei Lincei, Problemi attuali di scienza et di cultura, 48] (Rome: 1960), 259-267, state quite convincingly that Enoch has an Aramaic *Vorlage* behind it. On the other hand, Milik, (1976), 88 and 88 n.2 holds to the older position of Charles that between the Aramaic and Ethiopic is a Greek stage and that the Ethiopic is a translation from the Greek. It should be noted that Milik gives no evidence for rejecting the work of Ullendorff and merely states his rejection as his opinion.

Charles, (1902) xxx-xxxiii also held that Ethiopic Jubilees was a translation from the Greek. VanderKam, (1977) 8, has concluded that Jubilees was translated from Hebrew to Greek by 220 A.D., and (p.15) from Greek into Ethiopic by 500 A.D. Dillmann, (1851) 88, lists numerous Greek words that are translated into Ethiopic. See John T. Rook, "Boanerges, Sons of Thunder (Mark 3:17)", *JBL* 100 (1981a) 94 where a small piece of evidence for a possible Greek intermediary stage is presented.

I would conclude that while Ethiopic Enoch may have been translated from an Aramaic *Vorlage*, Ethiopic Jubilees was very likely translated from a Greek *Vorlage*.

32 Charles, (1902) 60 n.14.

33 Charles, (1902) 61 n.17 and Lipscomb, (1978) 159.

34 Lipscomb, (1978) 159.

35 Lipscomb, (1978) 160.

36 Charles, (1902) 67 n.5.

37 Lipscomb (1978) 159-160 suggests that mlkh is behind Mu'ak. He reasons that either the l has been dropped in an earlier source or that a scribal error has occurred. Charles (1902) 67n6 derives it from מעכה which seems to be the better suggestion.

38 Charles, (1902) 67 n.7 reads as ἀζουρα from אצורה "the treasured one." It could also possibly be from the uncertain root זרד but this is less likely.

39 One is hardly surprised when it is noticed (Jub 8:16) that Sēm's portion reaches the boundaries of the Garden of Eden, (the Holy of Holies and the dwelling place of the Lord), and incorporates Sinai and Zion. On the change from ג to ע see *BDB* 811.

40 So Lipscomb, (1978) 160 where he cites references for the variant use of β for מ in transliteration. For a consideration of a similar phenomenon occurring between Ayin and Gamma see Rook, (1981a) 94-15.

41 *BDB* 526.

42 See Rook, (1981a) for a discussion of the name Rāgaw.

43 Charles, (1913) 28 and (1902) 82 dates the Towel of Babel incident to 1645-1688 A.M., but this should be corrected to 1596-1639 A.M.

44 MSS C and D have 'Orā (ኦራ:) which Lipscomb, (1978) 160, accepts as deriving from Hebrew אור "light." See Jub 11:1.

45 M. Jastrow, *A Dictionary of the Targumim, the Talmud Babli and Yerushalmi, and the Midrashic Literature* (New York: 1975) 1024 col. 2, cites the Hebrew סרח (sin) but it is unlikely that this Talmudic word is behind the aetiology as a ג and not a ח would be expected in the Hebrew original.

46 Charles, (1902) 86 n.1 thought that these etymologies were reversed.

47 One would expect this from one whose homeland was in Ur.

48 S.P. Brock, "Abraham and the Ravens: A Syriac Counterpart to Jubilees 11-12 and Its Implications," *JSJ* 9 (1978) 135-152. Brock concludes that the differences between the Syriac account and the Jubilees tradition are so great that "the Syriac must go back to a parallel version of the story whose chronological structure in fact reflects...a more ancient stage in the development of the whole story than that presented in Jubilees" (p. 142). This suggestion that the tradition is not the product of the author of Jubilees encourages the redactional position supported by the present writer. It is less important to discover the origin of the original tradition, although this is a valid approach, than to determine why and how the author of Jubilees has used this tradition. One might call this method "intentional analysis."

49 See E.A. Speiser, (1964) 91-92, and C.J. Mullo Weir, "The Alleged Hurrian Wife-Sister Motif in Genesis," *Transactions* (1970) 14-25 for a critical reaction to Speiser.

50 In the era of Ezra, Nehemiah and I & II Chronicles this was an important question.

51 Davenport, (1971) 82 n.1.

52 Charles, (1895) 15 n.32. Paul de Lagarde's "r" scholion at Gen 5: 15 reads "γυνὴ μαλελεὴλ δινα θυγάτηρ βαραχιὴλ πατραδελφοῦ αὐτοῦ." Instead of ኣኅት: ኣቡሁ: which we find in Jubilees, this scholion reads πατραδελφοῦ αὐτοῦ. This, along with the Syriac, is the reason for Charles' emendation of ኣኅት: to ኣኅዉ: in every instance in Jubilees. As Jub 8:6 and 11:7 already have ኣኅዉ: Charles does not need to emend these.

53 See the commentaries. S.R. Driver and G.B. Gray, *The Book of Job* (ICC) (Edinburgh: 1921) 278-279. The addition of the name of the father is a common custom. E. Dhorme, *Le Livre de Job* (Paris: 1926) and (English translation) *A Commentary on the Book of Job* (London: 1967) 472, "God Has Blessed." N.H. Tur-Sinai (H. Torczyner), *The Book of Job: A New Commentary* (Jerusalem: 1957) 457, Marvin H. Pope, *Job* (AB) (Garden City, N.Y." 1965) 212. Attested in Akkadian documents as Barik-ilu/i, it is found in the business documents from the firm Murashu, 5th cent. B.C. Babylon.

54 *BDB* 140 Col 1. בָּרַכְאֵל. Babylonian Barik-ili. The Marashu texts are also mentioned.

55 Martin Noth, *Die Israelitischen Personnamen im Rahmen der Gemeinsemitischen Namengebung* (Stuttgart: 1928) 82-89.

56 Torcyzner, (1957) 457 suggests the pointing בֵּרַכְאֵל.

57 1. רזה "lean", רצה "acceptance", רשה "make firm", רשע "wicked"; 2. עזרה "helper"; 3. רך "delicate".

58 Some names cited in *BDB* which are both masculine and feminine are: מַעֲכָה (p.590), עֲתַלְיָה (p.800), אביה[ו] (p.4), אֲבִיחַיִל (p.4).

59 Jub 7:14-16. It is difficult to know if the references to cities being named after the wives are favourable or unfavourable. In the early Genesis account (4:17b) the city is a negative factor. See Frank S. Frick, *The City In Ancient Israel* SBLDS (Missoula: 1977) 205-208.

60 In Eusebius Nimrod (Νεβρωδ) is the name of a King in Babylon. See Eusebius, *Das Onomastikon der Biblischen Ortsnamen* ed. Erick Klostermann (Hildescheim: 1966) 4, 40, 140, 170.

61 So Eusebius, (1966) 4, and Gen 10:10.

62 See Davenport, (1971) 10 and 10 n.3 for the standard formula for land division in Jubilees.

63 MSS A,B ሰናኽር .

64 See Jub 8:21.

65 Notice the etiology of Babel. While the land of Sina'ar is called Babel because the languages were confused there (Jub 10:25), it is also called ፍቀት: ('over throw') because the tower was ገፍትኽ: (over-thrown) upon the earth (Jub 10:26). Because of translation difficulties an etymological pun has likely been missed. It is impossible to determine the original Hebrew.

66 Brock, (1978).

67 Patrick D. Miller, *Genesis 1-11. Studies in Structure and Theme* (JSOTS 8) (Sheffield, 1978) 27-31.

68 James Barr, "Man and Nature - The Ecological Controversy and the Old Testament," *BJRL* 55 (1972-1973) 25 n.2 and 26 n.1, has noticed that the introduction and use of agricultural tools in Jewish literature dealing with early stories is unusual.

69 See above 102-103.

70 The difficult MSS readings which Charles (1895) 66 has emended with the Latin to produce some curious possibilities. One wonders who is Lābā's sister (ኢኅት)? What is the intent in the phrase ወባቱኤል፡ ወልዩ ሠ፡ አባቱኤላዊያን?

71 Davenport, (1971) 53-54.

72 Davenport, (1971) 54.

73 For a consideration of the tradition 'Abraham's bosom' as synonymous with 'paradise' see J. Jeremias, "παράδεισος" *TDNT* 5, 769 n.36, and for its relation to T. Abr see Daniel J. Harrington, "Abraham Traditions in the Testament of Abraham and in the 'Re-written Bible' of the Intertestamental Period," *1972 Proceedings for the International Organization for Septuagint and Cognate Studies and the Society of Biblical Literature Pseudepigrapha Seminar* ed. Robt. A. Kraft (1972) 155-161.

74 For a consideration of similarity of ideas between Deuteronomy and Jubilees, see G.H. Schodde, "The Book of Jubilees," *Bibliotheca Sacra* 42 (1885) 637 n.2; B. Noack, (1958) 191-207, esp. pp.205-206, and more recently J.A. Williams, "A Conceptual History of Deuteronomism in the Old Testament, Judaism and the New Testament," (Unpublished Ph.D. Thesis, Southern Baptist Theological Seminary, 1978) 160-167.

75 Kosmala, (1965) 91-113 esp. 98-100. Defiling Israel results in death (Jub 30:8-9).

76 Reinhard Pummer, "The Book of Jubilees and the Samaritans," *Eglise et Theologie* 10 (1979) 147-178 esp. pp.167-170 has shown that the intention of Jub 30 is directed not against the Samaritans but against Gentile marriages.

77 This parallel blessing by Yesehaq is quite secondary.

78 Yēhudā will be a judge (?) along with one of his sons over the sons of Jacob (Jub 31:18). The word judge is a problem on two levels: 1) Is 'judge' an adequate translation and 2) is this a messianic text? Davenport (1971) 61 and n.1, 62, 64 presents an extensive discussion of the term but his confusion is unwarranted. He has been confused by the 1913 translation of Charles which changed the 1902 text at Jub 31: 15. The texts and translations read:

Jub 31:15 -

Ethiopic (p.116)	ወመኳንንተ፡ ወመሰፍንት፡
Latin (p.117)	Et princeps et judices
Charles (1902) (p.187)	princes and judges
(1913) (p.60)	judges and princes
E. Littmann (1900) (p.93)	Fürsten and Richter
Davenport (1971) (p.61)	judges, princes
VanderKam (1977) (p.148)	rulers and judges

Jub 31:18 -

Ethiopic	መኰንነ
Latin	principes
Charles (1902)	A prince
(1913)	A prince
Littmann	Fürst
Davenport	judge

The difficulty of the meaning of መኳንንት፡ and መሰፍንት፡ is clearly shown by the change in Charles' editions, and the variety of Old Testament Hebrew words which are behind መኳንንት፡ (see Davenport (1971), 60 n.1). It seems reasonable, however, to read መኳንንት፡ with the Latin, Littmann, Charles (and VanderKam) and translate it as "princes" (or "rulers"), against Davenport and Charles' (1913) edition.

Concerning the question of whether Jub 31:18 is a messianic reference, it must be considered unlikely (against Charles (1902) p.187). It is far more likely that the Judean descent of the Davidic dynasty is being legitimized (VanderKam (1977) 280 and 280 n.124). That this text is a reference to David was recognized by A. Dillmann, "Beiträge aus dem Buch der Jubiläen zur Kritik des Pentateuch-Textes," *Sitzungsberichte der königlich preussichen Akademie der Wissenschaften zu Berlin* 15 (1883) 323-340 where he says of chapter 31 that there is "deutliche Anspielung auf David."

I agree with VanderKam and Jaubert, (1963) 474-475 who see it as a legitimation text and not as a Messianic text. Also H.G.M. Williamson, "Sources and Redaction in the Chronicler's Genealogy of Judah" *JBL* 98 (1979) 351-359 esp. p.351 and 1 Chr 5:2a for a parallel to a prince (נגיד) from Judah.

79 Davenport, (1971) 67 n.2.

80 Gen 38:2 בת איש כנעני ושמו שוע
Gen 38:12 בת שוע
In Jubilees the name is formed from Gen 38:12 with a divine suffix added. See T. Jud 13:4, βησουέ.

81 MSS A and B omit. Charles suggests reading [illegible] with the Syriac fragment. Perhaps [illegible] is related to נעמן "loveliness."

82 Gen 38:7,10. In 1 Chr 2:3 the death of Onan is not recorded. W. Rudolph, *Chronikbücher* (Tübingen: 1955) 10,15 suggests the incident has been lost due to homeoteleuton, while Williamson (1979) 359 n.26 remarks that it is not unusual for the author of Chronicles to leave his readers to fill in the details from their knowledge of his *Vorlage*. Williamson's suggestion is the most likely.

83 For a discussion of the difficulty of the positioning of this story, see Judah Goldin, "The Youngest Son or Where Does Genesis 38 Belong?" *JBL* (1977) 27-44.

84 MSS A,C,D read [illegible] while MS B reads [illegible]. Perhaps the change is to account for the women's names in the list.

85 See Wilson (1977) 188-189. Wilson deals only with the 12 tribes and not their descendants. He feels that the addition of the descendants is an unimportant change.

86 It should be cautioned that Charles (1902, 1913) had emended the Jubilees list to bring it into agreement with Genesis. As has been noted earlier, Charles' presuppositions led him to conclude that Jubilees was inferior to Genesis and should be adjusted accordingly.

87 Charles (1902) 239 n.12-33, suggests that in Jubilees, Ya^{c}qob is included in the number 70. He further says that in Genesis Dina is counted but that she is omitted in Jubilees. This is correct if one accepts Jub 44:18b as original. It seems strange, however, that Ya^{c}qob would be counted with Leah's children. It seems more likely that "...were twenty-nine, and Jacob their father being with them..." is an addition and Dina was counted in the original 30. This would be consistent with both Genesis and the Jubilee author's position on women generally.

G. von Rad, *Genesis, A Commentary* (London: 1972) 403 considers the number 70 to be a fixed tradition in Genesis on the basis of Deut 10:22. This does not account for the LXX's 75 which is also found in Ex 1:5 (LXX) and some MSS at Deut 10:22 (MT) according to Charles. There seem to be two traditions, one of 70 and one of 75. The Genesis MT text is corrected to 70 from 66 in order to agree with the tradition known to the writer.

88 See note 84.

89 Charles (1902) 240 and p.240 n.20.

90 Charles (1902) 240 n.21.

91 Charles (1895) 159 n.34.

92 The reason for their omission in Jubilees is likely related to the purpose of the genealogy. Since they were so evil they should not be mentioned as in Genesis. See R.R. Wilson, "The Old Testament Genealogies

in Recent Research," *JBL* 94 (1975) 169-189 esp. p.181. They are mentioned only as an afterthought (Jub 44:34).

93 Wilson (1975) 181 and (1977) 27-36.

94 On the question of historical accuracy in conflicting genealogies see Wilson (1975) 182, "All of them are accurate when their differing functions are taken into consideration."

95 For the full genealogical list of Ya^{c}qob's descendants see Charles, (1902) 239-241.

96 Davenport (1971) 82 n.1.

97 So for example, O. Eissfeldt, *The Old Testament: An Introduction* (Oxford: 1974) 606-608; Testuz (1960) 101-120; Charles (1902) li-lvi; and Leonard Rost, *Judaism Outside the Hebrew Canon* (Nashville: 1976) 132.

98 David Bakan, *And They Took Themselves Wives. The Emergence of Patriarchy in Western Civilization* (New York: 1979) 66-102. Also, Phyllis Tribble, "Depatriarchalizing in Biblical Interpretation," in *The Jewish Woman, New Perspectives* ed. E. Koltun (New York: 1976) 217-240.

99 S. Zeitlin (1939-1940) 30, although he sees the excessive male superiority in Jubilees as 'primitive'.

100 Matrilineal: the blood line is carried by the mother.

101 Matrilocal: the wife is obtained from the tribe of one's mother as in the *beena* marriage. See Julian Morgenstern, "*Beena* Marriage (Matriarchat) in Ancient Israel and Its Historical Implications," *ZAW* 47 (1929) 91-110 and Morgenstern, "Additional Notes on '*Beena* Marriage (Matriarchat) in Ancient Israel'," *ZAW* 49 (1931) 46-58. See also Bakan (1979) and R.K. Harrison, "The Matriarchate and Hebrew Regnal Succession" *EvQ* 29 (1957) 29-34. It should be remembered though that when Jacob takes a wife (wives) from the tribe of his mother, his original purpose was not to obtain a wife but to escape from the wrath of his brother (Gen 27:43-45) and the tribe of his mother Rebecca is also the tribe of his grandfather, Abraham. One must wonder about the reliability of Morgenstern on all this.

102 Morgenstern (1929) 94.

103 Gen 4:26; 5:3,29; 16:15; 21:3, all from P.

104 Gen 4:25; 29:32; 30:6,8,11,13,18,20,21,24.

105 Jub 4 *ad loc.*; 14:24 although most often the naming of the child is either anonymous or ignored.

106 J.B. Segal, "The Jewish Attitude Towards Women," *JJS* 30 (1979) 121-137, esp. p.135.

CHAPTER 3

[1] Wiesenberg, "The Jubilee of Jubilees," *RQ* 3 (1961) 3.

[2] See the edition of Dillmann, (1859).

[3] Brock, (1978) 152, has concluded that chronology was a matter of vital concern to scholars of the Hellenistic period as part of the propaganda battle over the relative antiquity of the four main cultures of the time (Jewish, Greek, Egyptian and Babylonian). He has also concluded that chronological concerns provided an important motivating element behind haggadic developments in this period.

[4] Büchler, "Traces des idées et des coutumes hellénistiques dans le livre des Jubilés" *REJ* 86 (1930) 331.

[5] G.R. Driver, "Sacred Numbers and Round Figures" in *Promise and Fulfillment*, ed. F.F. Bruce, Festschrift for S.H. Hooke (Edinburgh: 1968) 72.

[6] So for example, T.L. Thompson, *The Historicity of the Patriarchal Narratives* (New York: 1974) 315 and J.M. Miller, *The Old Testament and the Historian* (London: 1976) 72.

[7] Bickermann, (1968) 87.

[8] B.Z. Wacholder, "Biblical Chronology in the Hellenistic World Chronicles," *HTR* 61 (1968) 461.

[9] Paul Schnabel, *Berossus und die Babylonisch-Hellenistische Literatur* (Leipsig-Rubin: 1923) 262ff.

[10] Gerhard Larsson, *The Secret System: A Study in the Chronology of the Old Testament* (Leiden: 1973) 58.

[11] Bickermann, (1968) 82-83. Wacholder, (1968) 113 suggests after a lengthy discussion of the chronology of the author Demetrius (who wrote circa 210 BC), that "it is possible, even likely, that the chronological alterations adopted in the Septuagint version of the Pentateuch were a product of Demetrius' chronographic schemes." If this were true, this would be evidence that the LXX existed *before* the present chronological numbers were added. Such a suggestion needs further examination.

[12] Larsson, (1973) 51 places MT chronology at 250-300 BC and LXX at 200 BC. I think there is reason to believe that the LXX chronology antedates that of MT as will be suggested below. There seems to be little reason for suggesting that LXX is dependent on MT as will be shown below.

[13] A. Dillmann, *Genesis Critically and Exegetically Expounded* (Edinburgh: 1897) vol 1, 220 had already concluded in the last century that SP was the most original, not the MT.

[14] R.W. Klein, "Archaic Chronologies and the Textual History of the Old Testament," *HTR* 67 (1974) has concluded that MT, LXX and SP are variations of an original but now lost list. Unfortunately he ignored Jubilees in his discussion.

[15] M. Bork, (1929) 206-222.

[16] Klein, (1974) 255-263.

[17] A. Murtonen, "On the Chronology of the Old Testament," *Studia Theologica* 8 (1955) 133-137 is a good example of a scholar attempting to discover the meaning and significance of the numbers without attempting to find an original list. Many of his conclusions are significant, especially the observation, which he unfortunately does not develop, that the date of the creation is eschatological in intent.

[18] Johnson, (1969) 35 has suggested that the chronology of Jubilees antedates the final MT chronology. This is of course quite possible, but difficult to prove.

[19] Testuz, (1960) 172-177.

[20] See the discussion of the importance of the Old Testament numbers in James Barr, *Biblical Words for Time* (London: 1969) 27 and Murtonen, (1955) 133-137.

[21] So J. Skinner, *A critical and Exegetical Commentary on Genesis* [ICC] (Edinburgh: 1910) 134 ff., S.R. Driver, *Genesis*, (London: 1904) 79 and more recently, Klein, (1974) 255-263.

[22] A. Bosse, "Die chronologischen Systeme in Alten Testament und in Josephus," *MVAG*, (1908) 2.

[23] A. von Gutschmidt, quoted in W. Skinner, (1910) 135.

[24] Gerhard F. Hasel, "The Genealogies of Genesis 5 and 11 and Their Alleged Babylonian Background," *AUSS* 16/2 (1978) 365 calls this the standard line of descent formula but in its fullest form it really is quite uncommon. A similar form is found in the Babylonian King Lists A and C. Wilson, (1977) 102. B, son of A, ruled "n" years. C, son of B, ruled "n^1" years, etc.

[25] G. von Rad, "History and the Patriarchs" *ExpT* 72 (1961) 70, O. Eissfeldt, (1974) 205 and B.S. Childs, *Introduction to the Old Testament as Scripture* (Philadelphia: 1979) 145-150.

[26] J. Maxwell Miller has theorized that originally Genesis 4:25-26 *preceded* Gen 4:1, a move which enables his so-called original list to be almost identical to Genesis 5 except for the inversion of positions 5 and 7 (The Descendants of Cain: Note on Genesis 4," *ZAW* 86 (1974) 164-174). For Miller, the lists come from a "stock genealogy". Yet this

does not account for the different spellings, the dislocated parts, nor why a final redactor left two lists in the final edition of Genesis.

It seems to me that the two lists are preserved because they are the descendants of two separate lines from Adam. The line of Cain dies out and is to be preserved by the line of Seth which survives the flood. It is this line, the pure line of Seth which is preserved by Jubilees.

One further point should be made about Genesis 4. Although this genealogy is ignored by Jubilees, the type of genealogical writing is similar to what we find in Jubilees except for the missing chronological notes. Here, as in Jubilees, genealogy is interwoven with narrative. The people in this list seem very real, they have emotions, even to the point of murder and vengeance, they have wives, and present offerings to God. The very things that make them appear real; murder, vengeance, attitude to offerings, polygamy, are the cause of their rejection. As we shall soon see, this is not unlike the style of Jubilees.

[27] Klein, (1974) 255-263.

[28] This raises an interesting point for at Genesis 7:1 Noah and "all his household" enter the ark. Of course, to suggest that "household" here included the three previously named ancestors of Noah is very speculative, yet in the light of Klein's proposed original list, one is struck by the combination of the number seven. If Noah's household included his three sons (and their wives) and originally his three forefathers (and their wives), then including Noah and his wife, *seven pairs* of humans are preserved in the ark, exactly what we would expect (Genesis 7:2).

[29] The birth of Arpachshad in Genesis 11:10 is said to occur two years after the flood. The parallel text in Jubilees 7:18 is extremely corrupt and Charles has emended the passage to agree with Genesis 11:10. Since Jubilees does not give us the year of the death of a patriarch, it is not clear as to the actual birth year of Arpachshad. If Shem is 100 years when the flood begins, he cannot be 100 years two years after the flood. Charles has not placed a date in the margin for the birth of Arpachshad in either his 1902 or 1913 edition. I suspect that "two years after the flood"is a scribal insertion in Jubilees and perhaps in Genesis as well. While it will cause a difference of two years in the calculation, I have decided to place the birth of Arpachshad in the year of the flood. This agrees with Speiser, (1964) 80; Johnson, (1969) 262 and von Rad, (1972) 157. This will not affect the Difference or the D of D columns, as all of the numbers in each tradition would simply need to be adjusted by two. Whether one subtracts 1656 from 1307 or 1658 from 1309 the answer in either instance is 349.

[30] Bork, (1929) 206ff.

[31] Charles, (1902) 66 n.1.

[32] Krüger, (1858) 289 emended the number to agree with the SP.

[33] Scholars generally agree that Samaritan influence on Jubilees is to be excluded. See Pummer, (1979) 164. This does not exclude the possibility that Jubilees influenced a work like SP at some point.

[34] Wiesenberg, (1961) 31.

[35] VanderKam, (1977) 124.

[36] VanderKam, (1977) 124.

[37] Pummer, (1979) 163 agrees with Rönsch, (1874) 352-363; 463, Charles, (1902) lxxvi-lxxvii and VanderKam, (1977) 124 that the text of Jubilees derives from a biblical text which was close to SP. This does seem to be the case.

[38] Wiesenberg, (1961) 9 n.36 has said that the lack of months in Jubilees is an archaic usage modelled on pre-exilic books of the Bible. Perhaps Jubilees is written prior to the use of month names in canonical Jewish writings.

[39] Testuz, (1960) 165-177. The minor adjustment needed to end the first era at the conquest rather than Sinai is of little consequence for the present discussion.

[40] Testuz, (1960) 172-173.

[41] Testuz, (1960) 173.

[42] Davenport, (1971) 69-70 and 70 n.5.

[43] The MT at 1 Kgs. 6:1 gives an exact date (480 years) for the period from the Exodus to the Solomonic temple. There is no exact date given for the period from the Solomonic temple to the end of the kingdom. Since the reigns of individual kings for this period overlap, they cannot simply be added up to arrive at a number. Generally the Exodus is dated at 2666AM and the exile 3576AM which is calculated by Thompson, (1974) 14-15 to be 910 years. If for the purposes of calculation only we accept this figure as accurate, then using the figure of 2410AM from Jubilees and adding 910 years to it places the exile in 3320AM which we know to be 587 in B.C. years. It is now possible to calculate 3479AM, which is 21 jubilees from the entrance into Canaan, as 427 B.C. This is in error by at least 250 years.

[44] The best discussion of the idea of the mid-time is found in J. van Goudoever, "A Study on the Idea of Mid-Time," *Bijdragen* 33 (1972) 262-307.

[45] Davenport, (1971) 69.

[46] Davenport, (1971) 71 n.1.

[47] Davenport, (1971) 71.

[48] Davenport, (1971) 68-70.

[49] Davenport, (1971) 71.

[50] Davenport, (1971) 71.

[51] B.Z. Wacholder, *Essays on Jewish Chronology and Chronography* (New York: 1976) is a collection of his most important articles. See also his "Chronomessianism, The Timing of Messianic Movements and the Calendar of Sabbatical Cycles," *HUCA* 46 (1975) 201-218.

[52] The relationship between stylized (or periodized) genealogies can be seen in the telescoping of lists into equal units as in Matthew 1, the ten generations from Adam to Noah and the ten (sic) generations from the flood to Abraham. See Lester L. Grabbe, "Chronology in Hellenistic Jewish Historiography," *SBL Seminar Papers* (1979) vol 2, 63.

[53] Grabbe, (1979) 45 and 68. Stage One: Reconciling Biblical Dates; Stage Two: Fusion of Biblical and Greek Myth; Stage Three: Biblical Events Part of World Chronicle. See Wacholder, (1968) 106-136.

[54] Grabbe, (1979) 63.

[55] Grabbe, (1979) 43.

[56] Grabbe, (1979) 59.

[57] Grabbe, (1979) 59.

[58] Grabbe, (1979) 43.

[59] Wiesenberg, (1961).

[60] Wiesenberg, (1961).

[61] See chapter one, Calendar and Rook, (1981) 83-87.

[62] Wiesenberg, (1961) 5.

[63] The calculation is done as follows: In the 12th jubilee (11x49) in the 7th week (6x7) in the 6th year (6x1) = (11x49)+(6x7)+6=587AM.

[64] Charles, (1895) 16 n.32 and (1902) 38 n.21.

[65] Davenport, (1971) 83 n.2.

[66] James C. VanderKam, "Enoch Traditions in Jubilees and Other Second-Century Sources," *SBL Seminar Papers* (1978a) 235.

[67] Davenport, (1971) 83 n.2.

[68] Milik, (1976) 12.

[69] See above pp. 31-36.

[70] Wiesenberg, (1961) 6 and 6 n.14. Wiesenberg's comment that the 490 years of Daniel 9:24, which is 10x49 jubilees, might presuppose such a reckoning hints at a relationship between the chronology of Jubilees and Daniel. If such a relationship could be proven the implications for sectarian second century theology would be astounding.

[71] Grabbe, (1979) 43.

[72] Grabbe, (1979) 43. One point needs to be raised concerning his definition of chronography. He calls it pre-scientific (I think he means anti-historical critical). It should be more accurately called a-scientific for it ignores actual history if it disagrees with the author's system.

[73] Grabbe, (1979) 49.

[74] For a consideration of the origin of the world-millennial week and some early Christian exponents, see Grabbe, (1979) 51-55.

[75] Davenport, (1971).

[76] Davenport, (1971). See especially Appendix III.

[77] VanderKam, (1978a) 234 has suggested that the source behind Jubilees 4:19 is the early part of the Book of Enoch and the Apocalypse of Weeks. This is against Charles, (1902) 38, Milik, (1976) 45 and P. Grelot, "Hénoch et ses écritures," *RB* 82 (1975) 481-488 who suggest the Book of Dreams (1 Enoch 83-90) as background. I agree with VanderKam as the Book of Dreams deals with a messiah which Jubilees ignores, and which one might have expected the author of Jubilees to have incorporated had the Book of Dreams been his source. The Apocalypse of Weeks on the other hand, deals with past history (1 Enoch 93:3) and future history until the judgment (1 Enoch 91:15). While the future is alluded to in Jubilees, the eschatological passages are void of any attempt to predict a date for the end of the present world order.

CHAPTER 4

[1] Morgenstern, (1955) 35.

[2] Dillmann, (1859).

[3] VanderKam, (1977) 283.

[4] VanderKam, (1977) 260.

[5] Phillip Sigal, *The Emergence of Contemporary Judaism* (Pennsylvania: 1980) 270 n.66.

[6] In agreement with Nickelsburg, "Narrative Writings," *Compendium Rerum Iudaicarum ad Novum Testamentum* (Assen: 1974) 79.

[7] See especially VanderKam, (1977) 207-285.

[8] VanderKam, (1977) 284.

[9] Jaubert, (1957) 31ff.

[10] See L. Finkelstein, *Pharisaism in the Making* (New York: 1972) 106. For a form-critical discussion of Jubilees 23:16-31 see Nickelsburg, (1974) 77.

[11] Charles, (1902) lxii-lxiii.

[12] Charles, (1902) 200 n.2-8.

[13] Nickelsburg, (1974) 78 and Nickelsburg, *Jewish Literature Between the Bible and the Mishnah* (Philadelphia: 1981) 79.

[14] VanderKam, (1977) 218. Wiesenberg, (1961) 39-40 feels that Jubilees 34:2-7 is from a post-Christian Zealot redactor. This is an unnecessary conclusion as "military prowess" need not be restricted to the Zealots. See Pummer, (1979) 151.

[15] VanderKam, (1977) 242.

[16] See endnote 78 to chapter two.

[17] Charles, (1902) 187 n.15.

[18] VanderKam, (1977) 248.

[19] VanderKam, (1977) 251.

[20] VanderKam, (1977) 252.

[21] Nickelsburg, (1974) 74.

[22] We have seen in our chapter on Calendar that there is no reason to suppose that the calendar of the Qumran sect was the 364-day calendar of Jubilees. None of the early historians (Josephus, Philo) claims that the Essenes used a 364-day calendar. Why the polemic from Jubilees is not a factor in the Qumran writings is not yet known. Perhaps by the time of the formation of the community there had been a development in ideology which caused a corresponding shift in calendar thinking at Qumran.

Perhaps this is further reason to separate the Essenes from Qumran. The Essenes have no calendrical polemic because they live in villages and towns (Josephus, *Jewish War* II, 8, 2). The Qumranites have no calendrical polemic because they are isolated from the rest of Judaism and do as they please in calendrical matters. Further research is needed in this area before a conclusion can be reached.

[23] Przybylski, (1979) 19.

[24] Macomber, (1975-1979).

B I B L I O G R A P H Y

Ackroyd, P.R.

1973 *I & II Chronicles, Ezra, Nehemiah* Torch Bible Commentaries, London.

Albeck, C.

1930 *Das Buch der Jubiläen und die Halacha* Beilage zum Jahresbericht der Hochschule für die Wissenschaft des Judentums in Berlin, Berlin.

Allegro, J.M.

1958 "More Isaiah Commentaries from Qumran's Fourth Cave" *JBL* 77 215-221

Baars, W., Zuurmond, R.

1964 "The Project for a New Edition of the Ethiopic Book of Jubilees" *JSS* 9 67-74

Bakan, D.

1979 *And They Took Themselves Wives. The Emergence of Patriarchy in Western Civilization* New York.

Barr, J.

1969 *Biblical Words for Time* London.

1972-73 "Man and Nature - The Ecological Controversy and the Old Testament" *BJRL* 55 9-32

Barth, C.

1975 "בקר bóqer" *Theological Dictionary of the Old Testament* (ed. G. Johannes Botterweck and Helmer Ringgren) Vol. 2 222-223 Grand Rapids.

Barthélemy, D.

1952 "Notes en marge de publications recentes sur les manuscrits de Qumrân" *RB* 59 187-218

Barthélemy, D., and J.T. Milik

1955 *Qumran Cave 1* [Discoveries in the Judaean Desert] Oxford .

Baumgarten, J.M.

1958 "The Beginning of the Day in the Calendar of Jubilees" *JBL* 77 355-360

1959 "Reply (to Zeitlin)" *JBL* 78 157

1962-63 הלוח של ספר היובלים והמקרא
(The Calendar of the Book of Jubilees and the Bible)
Tarbiz 32 317-328
Now in English as *Studies in Qumran Law* (Leiden:1977) 101-

1966 "The Counting of the Sabbath in Ancient Sources" *VT* 16 277-286

Beckwith, R.T.

1971 "The Modern Attempt to Reconcile the Qumran Calendar with the True Solar Year" *RQ* 7 379-396

Ben-Hayyim, Z. (ed.)

1973 *The Book of Ben Sira: Text; Concordance and an Analysis of the Vocabulary* (Hebrew) Jerusalem.

Bickerman, E.J.

1968 *Chronology of the Ancient World* London.

Black, M.

1978 "The Apocalypse of Weeks in the Light of 4QEn^{g}" *VT* 28 464-469

Bork, F.

1929 "Zur Chronologie der biblischen Urgeschichte" *ZAW* 47 206-222

Bosse, A.

1908 "Die Chronologischen Systeme im Alten Testament und in Josephus" *MVAG* 2

Bowman, J.

1959 "Is the Samaritan Calendar the Old Zadokite One?" *PEQ* 91 28

Brock, S.P.

1978 "Abraham and the Ravens: A Syriac Counterpart to Jubilees 11-12 and Its Implications" *JSJ* 9 135-152

Brown, F.,
Driver, S.R.,
Briggs, C.A.

1975 *A Hebrew and English Lexicon of the Old Testament* Oxford.

Broyde, I.

1904 "Al-Maghariyyah"
JE 8 254-255

Büchler, A.

1930 Traces des idées et des coutumes hellénistiques dans le livre des Jubilés
REJ 86 321-348

Burrows, M.

1950 *The Dead Sea Scrolls of Saint Mark's Monastery*
2 vols. New Haven.

Caquot, A.

1960 "Remarques sur la fête de la 'néoménie' dans l'ancien Israël"
RHR 68 1-18

Cazelles, H.

1962 "Sur les origines du calendrier des Jubilés"
Bib 43 202-212

Charles, R.H.

1895 *Mashafa Kufālē or the Ethiopic Version of the Hebrew Book of Jubilees* Oxford.

1902 *The Book of Jubilees or The Little Genesis* London.

1913 *Apocrypha and Pseudepigrapha of the Old Testament*
Vol. 2 Oxford.

Childs, B.S.

1979 *Introduction to the Old Testament as Scripture*
Philadelphia .

Cross, F.M.

1975 "The Evolution of a Theory of Local Texts"
Qumran and the History of the Biblical Text Boston.

Curtis, E.L.

1910 *A Critical and Exegetical Commentary on the Books of Chronicles* Edinburgh .

Davenport, G.L.

1971 *The Eschatology of the Book of Jubilees* Leiden.

Davies, P.R.

1977 *1QM, the War Scroll from Qumran. Its Structure and History* Rome .

Dexinger, F.

1977 *Henochs Zehnwochenapokalypse und offene Problem der Apokalyptikforschung* Leiden.

Dhorme, E.

1926 *Le Livre de Job* Paris.

English Trans. 1967 *A Commentary on the Book of Job* London.

Dillmann, A.

1850 "Das Buch der Jubiläen oder die kleine Genesis" *Jahrbücher der Biblischen Wissenschaft* Vol. 2 230-256

1851 Vol. 3 1-96

1859 *Mashafa Kufālē sive Liber Jubilaeorum* London.

1865 *Lexicon Linguae Aethiopicae* Leipzig.

1883 "Beiträge aus dem Buch der Jubiläen zur Kritik des Pentateuch-Textes: *Sitzungsberichte der königlich preussichen Akademie der Wissenschaften zu Berlin* 15 323-340

1897 *Genesis Critically and Exegetically Expounded* Trans. W.B. Stevenson Edinburgh

1907 *Ethiopic Grammar*, tr. by James A. Crichton London.

Driver, G.R.

1968 "Sacred Numbers and Round Figures" *Promise and Fulfilment* Edinburgh.

Driver, S.R.

1904 *Genesis* London.

Driver, S.R., Gray, G.B.

1921 *The Book of Job* Edinburgh.

Dupont-Sommer, A.

1952 "Contribution à 1'Exégèse du Manuel de discipline X 1-8" *VT* 2 229-243

1953 *Nouveaux aperçus sur les manuscrits de la Mer Morte* Pari

1954 *The Jewish Sect of Qumran and the Essenes* English Trans. - R.D. Barnett London.

1961 *The Essene Writings from Qumran* Oxford.

Eissfeldt, O.

1974 *The Old Testament: An Introduction* Oxford.

Emerton, J.A.

1976 "An Examination of a Recent Structuralist Interpretation of Genesis xxxviii" *VT* 26 79-98

Epstein, A.

1890 "Le livre des Jubilés, Philon, et le midrasch Tadsché" *REJ* 21 80-97

1891 Vol. 22 1-25

Eusebius

1966 *Das Onomastikon der Biblischen Ortsnamen* ed. Erick Klostermann Hildesheim.

Ewald, H.

1844 "Ueber die Aethiopischen Handschriften zu Tübingen" *Zeitschrift für die Kunde des Morgenlandes* 5, 164-201

Finegan, J.

1964 *Handbook of Biblical Chronology* Princeton.

Finkelstein, L.

1923 "The Book of Jubilees and the Rabbinic Halaka" *HThR* 16 39-61

1972 *Pharisaism in the Making* New York.

Fitzmyer, J.A.

1971 *The Genesis Apocryphon of Qumran Cave 1: A Commentary* Rome.

Frankel, Z.

1856 "Das Buch der Jubiläen" *MGWJ* 5 311-316 380-400

Frick, F.S.

1977 *The City in Ancient Israel* Missoula.

Fujita, S.

1976 "The Metaphor of Plant in Jewish Literature of the Intertestamental Period" *JSJ* 7 30-45

Ginzberg, C.D.

1864 "The Book of Jubilees"
A Cyclopaedia of Biblical Literature
ed. John Kitto Vol. 2 668-671

Ginzberg, L.

1912 "Eine unbekannte jüdische Sekte"
MGWJ 56 664-689
Reprinted Teil, 1922 from the journal 1911-1914
with an additional chapter.

Glasson, T.F.

1961 *Greek Influence in Jewish Eschatology* London.

Goldin, J.

1977 "The Youngest Son or Where does Genesis 38 Belong?"
JBL 96, No. 1, 27-44

Goldstein, J.

1977 *1 Maccabees*
(AB) 41 New York.

Gottstein, M.H.

1954 "Anti-Essene Traits in the Dead Sea Scrolls"
VT 4 141-147

van Goudoever, J.

1961 *Biblical Calendars* Leiden.

1972 "A Study on the Idea of Mid-time"
Bijdragen 33 262-307

Grabbe, L.L.

1979 "Chronography in Hellenistic Jewish Historiography"
SBL Seminar Papers Vol. 2 43-68

Grelot, P.

1969 "Soixante-dix semaines d'années"
Bib 50 169-186

1975 "Hénoch et ses écritures"
RB 82 481-488

Grintz, J.

1971-72 "Jubilees, Book of"
Encyclopaedia Judaica Vol. 10 235

Habel, N.C.
1971 *Literary Criticism of the Old Testament* Philadelphia.

Habermann, A.
1952 עדה ועדות Jerusalem.

Harrington, D.J.
1972 "Abraham Traditions in the Testament of Abraham and in the 'Re-written Bible' of the Intertestamental Period"
1972 Proceedings for the International Organization for Septuagint and Cognate Studies and the Society of Biblical Literature Pseudepigrapha Seminar (ed. Robt A. Kraft) 155-161

Harrison, R.K.
1957 "The Matriarchate and Hebrew Regal Succession"
EVQ 29 29-34

Hasel, G.F.
1978 "The Genealogies of Gen. 5 and 11 and their alleged Babylonian Background"
AUSS 16/2 361-374

1980 "Is the Aramaic of Daniel early or late?"
Ministry 12-13

Hengel, M.
1974 *Judaism and Hellenism* 2 Vols.
German original 1973. Translated by J. Bowman Philadelphia.

Hill, D.
1965 "Δίκαιου as a Quasi-Technical Term"
NTS 11 296-302

Hyatt, J.P.
1971 *Exodus*
New Century Bible London.

Jastrow, M.
1975 *A Dictionary of the Targumim, the Talmud Babli and Yerushalmi, and the Midrashic Literature* New York.

Jaubert, A.
1953 "Le calendrier des Jubilés et la secte de Qumrân. Ses origines bibliques"
VT 3 250-264

1957 *La date de la céne* Paris.

Jaubert, A.

1957 a — "Le calendrier des Jubilés et les jours liturgiques de la semaine" *VT* 7 35-61

1963 — *La notion d'alliance dans le judaïsme* Paris.

1965 — "The Calendar of Jubilees" *The Date of the Last Supper* Translated by I. Rafferty New York.

Jellinek, A.

1855 — *Bet ha-Midrasch. Sammlung kleiner Midraschim und vermischter Abhandlungen aus der alten jüdischen Literatur* 3 Leipsig.

Jeremias, J. — παράδεισος *TDNT* 5 769

Johnson, A.R.

1979 — *The Cultic Prophet and Israel's Psalmody* Cardiff.

Johnson, M.D.

1969 — *The Purpose of the Biblical Genealogies* Society for New Testament Studies Monograph Series, 8 Cambridge.

Klein, R.W.

1974 — "Archaic Chronologies and the Textual History of the Old Testament" *HThR* 67 255-263

Knibb, M.A.

1978 — *The Ethiopic Book of Enoch* 2 Vols. Oxford.

Kohler, K.

1904 — "Book of Jubilees" *JE* 7 301

Kosmala, H.

1965 — "The Three Nets of Belial" *ASTI* 4 91-113

Kretschmar, G.

1954-55 — "Himmelfahrt und Pfingsten" *Zeitschrift für Kirchengeschichte* Vierte Folge IV LXVI Band 209-253

Krüger, M.J.

1858 "Die Chronologie im Buche der Jubiläen"
ZDMG 12 279-299

Kuhl, C.

1952 "Die Wiederaufnahme - ein literarkritisches Prinzip?"
ZAW 64 1-11

Kuhn, K.G.

1960 *Konkordanz zu den Qumrantexten* Göttingen.

1961 "Zum Essenischen Kalendar"
ZNW 52 65-73

Kutsch, E.

1961 "Der Kalender des Jubiläenbuches und das Alte und das Neue Testament"
VT 11 39-48

Lambdin, T.O.

1978 *Introduction to Classical Ethiopic (Ge'ez)*
Ann Arbor.

Larsson, G.

1973 *The Secret System: A Study in the Chronology of the Old Testament* Leiden.

Leach, E.R.

1957 "A Possible Method of Intercalation for the Calendar of the Book of Jubilees"
VT 7 392-397

Leaney, A.R.C.

1966 *The Rule of Qumran and its Meaning*
London.

Lehmann, M.R.

1961 "Ben Sira and the Qumran Literature"
RQ 3 103-116

Levine, B.A.

1978 "The Temple Scroll: Aspects of its Historical Provenance and Literary Character"
BASOR 232 5-23

Lewis, J.P.

1968 *A Study of the Interpretation of Noah and the Flood in Jewish and Christian Literature* Leiden.

Lewy, H. and J.
1942-43 "The Origin of the Week and the Oldest West Asiatic Calendar"
HUCA 17 1-155

Lipscomb, W.L.
1978 "A Tradition from the Book of Jubilees in Armenian"
JJS 29 149-163

Lisowsky, G.
1958 *Konkordanz zum Hebräischen Alten Testament*
Stuttgart.

Long, B.O.
1968 *The Problem of the Etiological Narrative in the Old Testament*
BZAW 108 Berlin.

McCrystall, A.
1980 "Studies in the Old Greek Translation of Daniel"
Unpublished D.Phil dissertation
Oxford University.

Macomber, W.F.
1975-79 *A Catalogue of Ethiopian Manuscripts Microfilmed for the Monastic Manuscript Microfilm Library, Collegeville, I-IV* Collegeville.

Maier, J.
1978 *Die Tempelrolle vom Toten Meer*
München.

Milgrom, J.
1978 "'Sabbath' and 'Temple City' in the Temple Scroll"
BASOR 232 25-27

1978 a "Studies in the Temple Scroll"
JBL 97 501-523

1978 b "The Temple Scroll"
BA 41-43 105-120

Milik, J.T.
1951 "The Dead Sea Scrolls Fragment of the Book of Enoch"
Bib 32 393-400

Milik, J.T., Barthelemy, D.
1955 *Qumran Cave 1* [Discoveries in the Judean Desert]
Oxford.

Milik, J.T.

1957 "Le travail d'édition des manuscrits du Désert de Juda"
[Volume du Congrès Strasbourg, 1956]
SVT 4 17-26

1959 *Ten Years of Discovery in the Wilderness of Judaea*
Studies in Biblical Theology (SBT) 26
Translated by J. Strugnell London.

1960 "Notes d'epigraphie et de topographie palestiniennes"
RB 67 354-367 550-591

1966 "Fragment d'une source du Psautier (4QPs 89) et fragments des jubilés..."
RB 73 102-104

1973 "A propos de 11 Q Jub."
Bib 54 77-78

1976 *The Books of Enoch, Aramaic Fragments from Qumran Cave 4* Oxford.

Miller, J.M.

1974 "The Descendants of Cain: Note on Genesis 4"
ZAW 86 164-174

1976 *The Old Testament and the Historian* London.

Miller, P.D.

1978 *Genesis 1-11: Studies in Structure and Theme*
(JSOTS 8) Sheffield.

Morgenstern, J.

1929 "Beena Marriage (Matriarchat) in Ancient Israel and Its Historical Implications"
ZAW 47 91-110

1931 "Additional Notes on 'Beena Marriage (Matriarchat) in Ancient Israel'"
ZAW 49 46-58

1955 "The Calendar of the Book of Jubilees, Its Origin and Its Character"
VT 5 34-76

Mullo Weir, C.J.

1970 "The Alleged Hurrian Wife-Sister Motif in Genesis"
Transactions 14-25

Murtonen, A.

1955 "On the Chronology of the Old Testament"
ST 8 133-137

Nickelsburg, G.W.E. Jr.

1972 *Resurrection, Immortality and Eternal Life in Intertestamental Judaism*
(Harvard Theological Studies 26) Cambridge.

1974 "Narrative Writings"
CRINT Assen.

1981 *Jewish Literature Between the Bible and the Mishnah* Philadelphia.

Noack, B.

1958 "Qumran and the Book of Jubilees"
SEÅ 22-23 191-207

1962 "The Day of Pentecost in Jubilees, Qumran and Acts"
ASTI 1 73-95

Nolland, J.

1979 "Sib.Or.III 265-94, An Early Maccabean Messianic Oracle"
JThS 30 158-166

North, F.S.

1961 "Four-month Seasons of the Hebrew Bible"
VT 11 446-448

North, R.

1954 *Sociology of the Biblical Jubilee*
Rome.

Noth, M.

1928 *Die Israelitischen Personnamen im Rahmen der Gemeinsemitischen Namengebung* Stuttgart.

Obermann, J.

1956 "Calendric Elements in the Dead Sea Scrolls"
JBL 75 285-297

Odeberg, H.

Ενωχ
TDNT 2 556-560

Pope, M.H.
1965 *Job* (AB) 212 Garden City.

Przybylski, B.
1979 "The Identity of the Calendars of I Enoch, Jubilees and the Essenes, Theory or Fact?" (Paper presented to the November 1979 SBL Meetings, N.Y.)

Pummer, R.
1979 "The Book of Jubilees and the Samaritans" *Église et Théologie* 10 147-178

Rabin, C.
1957 *Qumran Studies* Oxford.

Rad, G. von
1961 "History and the Patriarchs" *ExpT* 72
1972 *Genesis: A Commentary* London.

Rönsch, H.
1974 *Das Buch der Jubiläen oder die kleine Genesis* Leipzig.

Rook, J.T.
1981 "A Twenty-eight-Day Month Tradition in the Book of Jubilees" *VT* 31 83-87
1981 a "Boanerges, Sons of Thunder" (Mark 3:17) *JBL* 100 94-95

Rordorf, W.
1968 *Sunday: The History of the Day of Rest and Worship in the Earliest Centuries of the Christian Church* London.

Rost, L.
1976 *Judaism Outside the Hebrew Canon* Nashville.

Rowley, H.H.

1957 "The Teacher of Righteousness and the Dead Sea Scrolls"
BJRL 11 114-146

Rudolph, W.

1955 *Chronikbücher*
Tubingen.

Sanders, E.P.

1977 *Paul and Palestinian Judaism*
London.

Schecter, S.

1899 *The Wisdom of Ben Sira*
Cambridge.

Schodde, G.H.

1888 *The Book of Jubilees*
a reprint of the Bibliotheca Sacra edition of 1885-87 Oberlin.

Schnabel, P.

1923 *Berossus und die Babylonisch-Hellenistische Literatur*
Leipzig-Rubin.

Schürer, E., Vermes, G., Millar, F.

1973 *The History of the Jewish People in the Age of Jesus Christ* 175 B.C. - A.D. 135) Edinburgh.

Schultz, J.P.

1975 "Two Views of the Patriarchs: Noahides and Pre-Sinai Israelites"
Texts and Responses. Studies presented to N.N. Glatzer on the occasion of his seventieth birthday by his students. 41-59 Leiden.

Segal, J.B.

1957 "Intercalation and the Hebrew Calendar"
VT 7 250-307

1961 "The Hebrew Festivals and the Calendar"
JSS 6 74-94

1963 *The Hebrew Passover: From the Earliest Times to AD 70"*
(London Oriental Series 12) London.

Segal, J.B.

1979 "The Jewish Attitude Towards Women"
JJS 30 121-137

Sigal, P.

1980 *The Emergence of Contemporary Judaism*
Volume One: The Foundations of Judaism from Biblical Origins to the Sixth Century A.D.
Part One: From the Origins to the Separation of Christianity Pittsburgh.

Simon, M.

1938 "Rosh Hashanah"
The Babylonian Talmud. Seder Mo'ed VII
ed. Isodore Epstein 39 London.

Singer, W.

1898 *Das Buch der Jubiläen oder die Leptogenesis*
Stuhlweissenburg.

Skinner, J.

1910 *A Critical and Exegetical Commentary on Genesis*
Edinburgh.

Snaith, N.H.

1947 *The Jewish New Year Festival*
London.

Speiser, E.A.

1964 *Genesis* (AB)
Garden City.

Talmon, S.

1951 "Yom Ha-kippurim in the Habakkuk Scroll"
Bib 32 549-563

1958 "The Calendar Reckoning of the Sect from the Judean Desert"
Scripta Hierosolymitana 4 162-199

Talmon, S.,
Fishbane, M.

1972-73 "Aspects of the Literary Structure of the Book of Ezekiel"
Tarbiz 42 35-38

Talmon, S.

1975 "The Textual Study of the Bible - A New Outlook"
Qumran and the History of the Biblical Text 321-400
Cambridge.

Tedesche, S. "The Book of Jubilees"
IDB 2 1002-1003

Testuz, M.
1960 *Les idées religieuses du Livre des Jubilés*
Geneva et Paris.

Thompson, T.L.
1974 *The Historicity of the Patriarchal Narratives*
BZAW 133 New York.

Tribble, P.
1976 "Depatriarchalizing in Biblical Interpretation"
The Jewish Woman. New Perspectives 217-240
(ed. E. Koltun) New York.

Tur-Sinai, N.H.
(H. Torczyner)
1957 *The Book of Job: A New Commentary*
Jerusalem.

Ullendorff, E.
1960 "An Aramaic 'Vorlage' of the Ethiopic Text of Enoch?"
Atti del Convegno Internazionale di Studi Etiopici
[Accademia Nazionale dei Lincei, Problemi attuali
di scienza et di cultura, 48] 259-267 Rome.

VanderKam, J.C.
1977 *Textual and Historical Studies in the Book of Jubilees*
Missoula.

1978 a "Enoch Traditions in Jubilees and Other Second-
Century Sources"
SBL Seminar Papers

1978 b "The Textual Affinities of the Biblical Citations
in the Genesis Apocryphon"
JBL 97 45-55

1979 "The Origin, Character, and Early History of the
364-Day Calendar: A Reassessment of Jaubert's
Hypotheses"
CBQ 41 390-411

1981 "The Putative Author of the Book of Jubilees"
JSS 26 209-217

Vermes, G.

1977 *The Dead Sea Scrolls* London.

1977 a *The Dead Sea Scrolls: Qumran in Perspective* London.

Vogt, E.

1955 "Antiquum kalendarium sacerdotale"
Bib 36 403-408

1958 "Kalenderfragmente aus Qumran"
Bib 39 72-77

Wacholder, B.Z.

1968 "Biblical Chronology in the Hellenistic World Chronicles"
HTR 61 451-481

1975 "Chronomessianism, the Timing of Messianic Movements and the Calendar of Sabbatical Cycles"
HUCA 46 201-218

1976 *Essays on Jewish Chronology and Chronography* New York.

Wernberg-Møller, P.

1957 *The Manual of Discipline* Leiden.

Wiesenberg, E.

1961 "The Jubilee of Jubilees"
RQ 3 3-40

Williams, J.A.

1978 "A Conceptual History of Deuteronomism in the Old Testament, Judaism and the New Testament"
(Unpublished Ph.D Thesis, Southern Baptist Theological Seminary) 160-167

Williamson, H.G.M.

1979 "Sources and Redaction in the Chronicler's Genealogy of Judah"
JBL 98 351-359

Wilson, R.R.

1975 "The Old Testament Genealogies in Recent Research"
JBL 94 169-189

1977 *Genealogy and History in the Biblical World*
New Haven.

Winter, P.

1956 "Twenty-six Priestly Courses"
VT 6 215-217

Woude, A.S. van der

1971 "Fragmente des Buches Jubiläen aus Qumran Höhle XI (11 Q Jub.)"
Tradition und Glaube: Das Frühe Christentum in seiner Umwelt
(eds. G. Jeremias, H.W. Kuhn and H. Stegemann)
Göttingen.

Yadin, Y.

1962 *The Scroll of the War of the Sons of Light Against the Sons of Darkness*
Translated by B. and C. Rabin Oxford.

1977 *The Temple Scroll*
3 vols. and supplement Jerusalem.

Zeitlin, S.

1930 "Notes relatives au calendrier juif"
REJ 89 349-359

1939-40 "The Book of Jubilees: Its Character and Significance"
JQR 30 1-31

1952 *Zadokite Documents* Philadelphia.

1957 "The Book of 'Jubilees' and the Pentateuch"
JQR 48 218-235

1959 "The Beginning of the Day in the Calendar of Jubilees"
JBL 78 153-156

1973 "Some Stages of the Jewish Calendar"
Studies in the Early History of Judaism
Vol. 1 183-193 New York.

1973 "The Judean Calendar During the Second Commonwealth and the Scrolls"
Studies in the Early History of Judaism
Vol. 1 194-211 New York.