CHAPTER 8 LABORATORY TEST OF PIPE JOINTS

8.1 INTRODUCTION

Previous research (Craig 1983, Norris 1989, Milligan and Norris 1993) and the numerical results in Chapters 3 and 6 of the current research reveal that the misalignment of the pipeline causes stress concentrations in the region of the pipe joint under 'edge' loading condition. These stress concentrations will damage the pipe in severe cases. Since in practice all pipelines will contain some misalignments, improvement of the jacking pipes and the pipe joints will obviously reduce the chance of failures during pipe jacking. In general, there are two ways to achieve this. The first one is to reduce the stress concentrations at the pipe joint and the other is to raise the pipe's strength.

Use of packing material between pipes is proven to be a good way to reduce the stress concentrations (Milligan and Ripley 1989, Ripley 1989, Boot and Husein 1991, Husein 1989) and changing pipe end geometry is another possible way to lessen the stress concentrations. Two possible ways to raise the pipe strength are prestressing and reinforcement in the region of the pipe joint. All these four methods have been tested in the laboratory with model pipes. They are discussed in detail in Section 8.4 to Section 8.8 of this chapter after the discussion of the pipe casting and the test apparatus in Sections 8.2 and 8.3

8.2 PIPE CASTING AND CHARACTERISTIC TESTS

The model pipes were cast with sand as delivered to simulate the prototype pipes. To achieve a common cube strength of about 65MPa, the proportions of the different ingredients, cement, water, fine sand and coarse sand as shown in Table 8.1, were used after

taking reference of the results from Ripley's research (1989). The cement was rapid hardening to reduce the curing period and hence shorten the overall time taken for the tests. This type of cement should produce the 28 day strength for ordinary Portland cement when samples are 7 days old. The results of the characteristic tests for the concrete cubes also show that the cube strength changed only a little after 7 to 9 days in summer.

Table 8.1 Ingredients of the concrete

cement	water	fine sand	coarse sand
23.68 %	7.58 %	28.84 %	39.87 %

One pipe and six associated 100mm cubes were cast each time using a vibration technique. The model pipes represented typical 1200mm internal diameter prototype pipes at a scale of about 1:6, and were produced using the mould designed by Ripley (1989), shown in Figure 8.1 and Plate 8.1. The dimensions of the model pipe are also shown in the figure. The modified end plate for an alternative pipe end geometry is discussed in section 8.5.

After casting, the associated cubes were then tested for crushing strength. The 9 day strength in summer and the 14 day strength in winter were used to normalize the pipe strength to allow for some factors such as water temperature, moisture content of the sand and curing. The strengths of the corresponding cubes are given in Table 8.2 and Table 8.3.

The results from the characteristic tests show that:

(1) The cube strengths are very close within one group (associated with the same pipe) although there are some strength differences between different groups.

(2) In general, the difference in strength between cubes of different groups reduces with time. The difference on the 9th day in summer or on the 14th day in winter is the smallest of the current test.

(3) On average, the compressive strength rises very little after 7-9 days in summer or after 12-14 days in winter.

(4) Combining the facts above, the strength on the 9th day in summer or on 14th day in winter is considered as a good reference strength for normalizing the pipe strength.

Table 8.2 Cube strength in summer (MPa)

pipe number	2 days	5 days	other time (No. of days)	9 days
1	38.25		51.8 (6)	55.7
1	36.23		63.6 (6)	54.9
2	30.59	46.8		51.7
2	29.96	42.9		52.9
3	42.77		57.9 (8)	58.1
3	43.04		60.7 (8)	60.4
4	41.17		55.5 (6)	59.0
4	41.65		57.5 (6)	58.8
5	49.98	62.1		66.3
5	49.4	63.5		65.9
6	50.4	62.4		65.8
6	50.3	66.4		69.1
7	47.04	64.2		66.0
7	45.91	63.2		66.2
8	45.84	57.2		64.5
8	46.31	57.8		63.5
9	46.03	58.5		64.3
9	45.86	58.3		63.6
10	42.54		59.9 (6)	64.0
10	42.41		57.1 (6)	63.3
11	46.71	59.6		63.6
11	45.77	59.6		64.4
12	47.27	61.1		67.3
12	47.23	60.9		66.4
14	50.40		60.7 (5.5)	64.7
14	50.50		60.9 (5.5)	64.6
19	50.10		64.0 (8)	63.7
19	50.50		63.7 (8)	65.2

Table 8.3 Cube strength in winter (MPa)

pipe number	2 days	9 days	other time (No. of days)	14 days
20	31.47		44.2 (5)	61.3
20	32.79		53.5 (7)	60.2
21	31.57		51.8 (5)	62.0
21	32.26		44.4 (3)	62.4
22	32.40		57.6 (11)	59.7
22	30.92	56.7		59.4
23	28.43		50.3 (7)	54.4
23	28.02	55.2		54.4
24	24.44		48.6 (10)	53.9
24	23.51		50.1 (12)	56.4
25	24.53		50.7 (8)	55.6
25	23.52		53.5 (10)	54.2

8.3 TEST APPARATUS

Since the damage of the jacking pipes is mainly due to the pipeline misalignment, it is essential to include the localization effect of the load distribution to assess the strength of the jacking pipes. To do this, two load plates have been designed as shown in Figure 8.2 and plate 8.2. Plate A with a square end is used to apply uniform pressure, while the plate B with an angled end ($\beta = 1.0^0$, this angle is similar to the actual applied misalignment angle in the numerical analysis; refer to Chapter 7) is used for non-uniform pressure to simulate the load localization caused by the pipeline misalignment. The upper steel ring and the stiffeners are designed to prevent bending deformation of the plate, so that the plate will move as a rigid block when loaded. In the tests, the load was applied to the centre solid steel block which also enhanced the stiffness of the load plate.

The test apparatus is shown in Figure 8.3 and Plate 8.3. The pipe was bedded on to the bottom steel block with plaster and the packing ring was stuck on the top of the concrete pipe

when packing material is used. One of the load plates was then placed on the top of the pipe to provide uniform or non-uniform pressure depending on the type of test. A load cell was placed between the load plate and the hydraulic jack to record the applied load. Since the load plate is assumed to be rigid as discussed above, the pressure with plate B would be linearly distributed on each half of the pipe end if the packing material and the concrete pipe are linearly elastic. The maximum load of the test machine was 2000kN and the minimum load increment was 100N.

8.4 EFFECT OF PACKING MATERIAL

The use of packing material to reduce the stress concentrations is clearly seen to be effective, but its working mechanism is still not well understood. The ideal material is considered to be one that compresses greatly when loaded and recovers its thickness when unloaded, and has a low Poisson's ratio so that it does not induce extra tensile stresses in the concrete pipe. Ripley (1989) has done comprehensive laboratory tests for various packing materials, such as dense fibreboard, chipboard, plywood, softboard, German chipboard, plane timber and blockboard, to seek the material closest to the ideal. The tests were carried out to investigate the responses of the packing materials between two concrete blocks under compression. The tests included the effects of cyclic loading, material thickness and material saturation condition. The conclusion is that fibreboard, chipboard and to a lesser extent plywood are good packing materials (Milligan and Ripley 1989, Ripley 1989). The research from Boot and Husein (1991) and Husein (1989) gives a similar conclusion about the importance of the packing material in pipe jacking with clay pipes, as discussed in Chapter 1.

In the present test, however, the aim is to investigate the effect of the packing material on the pipe strength instead of the response of the packing material, that is, the test is used to investigate the effect of material properties on the stress distribution in the concrete pipes.

Similar work has also been done by numerical analysis in the current research and the numerical results of the current research (refer to Chapter 3 and Chapter 6) confirm that materials which have a low Poisson's ratio and are very compressible are good packing materials.

Plywood and rubber were chosen for this test because they have quite different Poisson's ratio, which showed a significant influence on the stress distributions at the pipe joint according to the numerical results in the current research. The size of the packing ring is shown in Figure 8.4. Plate 8.4 shows a typical plywood packing ring. The scales of the pipe and packing ring were the same, about one sixth of those used in practice. The tests were carried out in three pipe groups, one without packing material, one with plywood packing and one with rubber packing. The pipe strength without packing material is used as reference strength. Within each group, one pipe was tested under uniform pressure with load plate A, while the rest were tested under non-uniform pressure with load plate B to include the effect of load distribution.

The purpose of the tests was to investigate the overall improvement in pipe performance rather than to study localised deformations. Therefore the pipe themselves were not instrumented , but the load was accurately monitored with a load cell and careful observations were made of spalling, crack generation and failure mode. The failures were all global ones for pipes under uniform pressure, while failures under non-uniform pressure showed more or less localization. For the first pipe group (without packing), there was some spalling in the region of the pipe joint, then some cracks appeared at the early load stage (35 to 50 percent of final load) near the pipe joint especially under non-uniform pressure. For the pipes with rubber packing, the phenomena were similar, except that the spalling was more severe, and cracks appeared much earlier (at 20 to 30 percent of final load) and developed into big cracks very quickly. As for the group with plywood packing material, only at a late load stage was there some spalling and cracking, and the failure modes were less localized than

those in the other two groups. The results of the final pipe strengths are given in Table 8.4, where normalized strength is defined as $\frac{ultimate\ load}{pipe\ cross\ section\ area \times cube\ strength}$.

Table 8.4 Final pipe strength with different packing materials

pipe	load type	packing	normalized strength (%)
1	uniform (A)	no	84.87
3	non-uniform (B)	no	42.98
4	A	plywood	82.76
5	B	plywood	53.49
6	B	plywood	54.04
7	A	rubber	55.20
8	B	rubber	cracked very early
9	B	rubber	45.51
10	B	rubber	41.95

The results from the tests are summarised as following:

(1) For the uniform pressure, plywood packing material has almost no effect on the final pipe strength while rubber lowers the pipe strength. This has also been noticed in the numerical analysis, although some people consider that as a packing material rubber has no effect on the pipe strength.

(2) Under non- uniform pressure, the plywood packing material improves the pipe strength by over ten percent, while the rubber has almost no effect on the final pipe strength. However, the rubber packing makes the pipe crack at a very low load stage (about 20-30 percent of final load), which would make the pipe lose its function due to leaking. This result was somewhat unexpected.

(3) Under non-uniform pressure, the spalling mainly appeared at the positions under the maximum pressure (in the region of $\theta=0^0$ and 180^0), while the cracks appeared at first in the region of $\theta=90^0$ and 270^0 near the pipe joint. Moreover, after failure it was found that there were more cracks on the internal surface in some pipes than on the external surface observed during the tests.

(4) From the results of both laboratory tests and numerical analyses in Chapters 3 and 6, it is easy to see that any material with a high Poisson's ratio should be avoided for use as packing material in pipe jacking.

(5) Further tests should be carried out to investigate other properties of packing material, such as stiffness and thickness, although some numerical analyses have been carried out about the stiffness of the packing material.

8.5 EFFECT OF PIPE END GEOMETRY

Another possible way to reduce stress concentrations is to use a pipe with different end geometry which can increase the contact area in the case of misalignment of the pipeline. To achieve this, an end plate was designed as shown in Figure 8.5. Three pipes were cast with this new end plate.

The tests included all three pipes with plywood packing material. One pipe was tested under uniform pressure and the other two under non-uniform pressure. The final results are given in Table 8.5.

Table 8.5 Final pipe strength with new end geometry

pipe	load type	packing	new pipe end	normalized strength (%)
11	A	Plywood	yes	73.89
12	B	Plywood	yes	54.42
13	B	Plywood	yes	57.29

In comparison with the conventional pipe end group with the same packing material in Section 8.4, failure under non-uniform pressure appeared more global. There was no spalling and fewer cracks even at a late load stage. Again, the cracks were first spotted in the region

of $\theta = 90^0$ and 270^0 (under the minimum pressure positions) near the pipe joint. The test results are summarised as follows:

(1) The pipe strength falls a little under uniform load due to the contact area reduction at the pipe joint as expected.

(2) For non-uniform load, the pipe strength with new pipe end is only a little higher than that with the conventional pipe end. However, the new geometry effectively prevents the problem of spalling at the pipe joint and cracking at low load level. Hence it will allow the pipe to perform more effectively during its working life.

(3) In the current tests, the bevel angle (1^0) of the pipe end is the same as that of the load plate, further experiments are needed with different angles of the pipe end to form a better understanding of the effect of alternative geometry of the pipe end.

(4) A more detailed study could also be carried out by numerical analysis, for instance to investigate the effects of varying different parameters of the pipe end, such as the magnitude of the bevel angle and the extent of the bevel.

8.6 EFFECT OF LOCAL PRESTRESSING

In order to prevent pipe failure, the pipe strength can be improved rather than reducing the stress concentrations. The numerical analysis in the current research shows that non-uniform axial (longitudinal) pressure will induce some tensile stresses (mainly in the circumferential direction) in the region of the pipe joint; and it is also known that concrete usually fails due to tensile stresses and has quite high strength under compression (Jian and Feng 1991, Neville 1981). According to the theory of elasticity (Timoshenko and Goodier 1970), local prestressing (pressure in the radial direction on the external surface of the pipe) will produce compression stresses in the circumferential direction in the region of the pipe joint, in turn such pressures will reduce any tensile stresses in the region without inducing new stress concentrations and hence in theory improve the pipe strength. In order to apply local

prestressing to the concrete pipes in the region of the pipe joint, a steel band was designed as shown in Figure 8.6 and Plate 8.5. The internal diameter of the steel band was slightly smaller than the external diameter of the concrete pipe, so prestresses could be applied by tightening the steel band.

The tests again included three pipes all with plywood packing material, and with local prestressing provided by the steel band shown in Figure 8.6. Again one pipe was tested under uniform pressure and other two under non-uniform pressure. The phenomena were similar to those in the group with the new pipe end geometry in Section 8.5. More precisely, there was again no spalling problem and cracks appeared only at a very late load stage. The pipes suffered global failures in general. The final pipe strengths are shown in Table 8.6 and are higher than those without prestressing.

Table 8.6 Final pipe strength with local prestressing

pipe	load type	packing	prestressing	normalized strength (%)
14	A	plywood	yes	76.53
15	B	plywood	yes	61.03
16	B	plywood	yes	56.71

The results in this section are summarised as following:

(1) The pipe strength falls a little under uniform pressure due to the local effect of the prestressing.

(2) For non uniform pressure, the final pipe strength is improved by about ten percent. The prestressing also prevents the spalling and cracking problems.

(3) Cracks on the external pipe surface appeared at the late load stage and were located below the steel band.

(4) Some more research should be done about the effect of the magnitude and the location of the prestressing.

8.7 EFFECT OF LOCAL REINFORCEMENT

Local reinforcement is another possible way to improve the pipe strength. Unlike local prestressing, its working mechanism is to let the steel reinforcement take the tensile stresses at the pipe joint. From the numerical analysis in the current research, it is known that the stress concentrations appear in the region of the pipe joint and tensile stresses exist mainly in the circumferential direction. To make use of the reinforcement efficiently, a steel cage was designed for local reinforcement in only the circumferential direction in the region of the pipe joint. The cage is shown in Figure 8.7 and Plate 8.6, where the few small longitudinal wires only were required to form the cage.

The tests in this group again included three pipes with plywood packing material, one under uniform pressure and the other two under non-uniform pressure. Similarly, the pipes suffered global failures. There was again no spalling before failure of the pipe and some small cracks appeared just before failure. However, the final pipe strengths under non-uniform pressure were much higher than those without reinforcement as discussed in Section 8.4. The results are shown in Table 8.7.

Table 8.7 Final pipe strength with local reinforcement

pipe	load type	packing	reinforcement	normalized strength (%)
17	A	plywood	yes	78.55
18	B	plywood	yes	67.11
19	B	plywood	yes	62.25

The test results are summarised as follows:

(1) The pipe strength falls very little under uniform pressure due to the local effect of the reinforcement.

(2) For non-uniform pressure, the final pipe strength has improved by about twenty percent. Reinforcement has also prevented the spalling and cracking problems.

(3) Cracks appeared at first below the reinforcement in the region of $\theta=0^0$ and 180^0 (under the two maximum pressure positions).

(4) The location of the local reinforcements, the difference between circumferential and longitudinal reinforcement, and the difference between local and overall reinforcement should be studied in the future.

8.8 FURTHER INVESTIGATIONS OF COMBINING FACTORS

So far, several factors such as packing material, pipe end geometry, local prestressing and local reinforcement, have been discussed. All the tests were with packing material except those for reference strength. To check how the improved pipe would perform without packing material, a few more pipes were tested. In the current group, one pipe was tested under uniform pressure with the modified end geometry and local reinforcement. The other four were tested under non-uniform pressure with local reinforcement, and with the end geometry and packing condition shown in Table 8.8.

During the tests, there was no spalling problem except for the pipe with the square end. However, cracks appeared at about 55-65 percent of the final load, excepting the pipe with plywood packing material where cracks occurred just before failure of the pipe. The final strengths of the pipes are given in Table 8.8.

Table 8.8 Final pipe strength of different factors

pipe	load type	packing	new end	reinforcement	normalized strength (%)
21	A	No	Yes	Yes	52.41
22	B	No	Yes	Yes	34.50
23	B	No	Yes	Yes	44.00
24	B	plywood	Yes	Yes	63.30
25	B	No	No	Yes	39.76

The summarisation of the test results in this section is as follows:

(1) The modified end geometry and local reinforcement cannot achieve their goal of improving the pipe strength without good packing material.

(2) The modified end geometry has a small effect on the final pipe strength, but prevents the spalling problem very efficiently even without packing material.

(3) The results show once more that local reinforcement can increase the pipe strength by about twenty percent when with a good packing material.

8.9 A FEW COMMENTS

So far, four different methods for possible improvement of pipe strength have been tested with model pipes and discussed in detail in Sections 8.4 to 8.8. A few failed pipes are shown in Plate 8.7. From a general point of view, a few more comments are given as following:

(1) Packing material is the key factor for strength improvement of the jacking pipe under non-uniform pressure because other methods increase the pipe's strength only with the help of good packing material. However, packing material can improve the pipe strength or make things worse depending on the type of packing material. Material with high Poisson's ratio, like rubber, should be avoided for use as packing material.

(2) All these methods prevented spalling and early cracking to some extent. With plywood packing, the local prestressing and local reinforcement improve the pipe strength by about ten and twenty percent respectively.

(3) Numerical analyses, especially parametric studies, can be carried out to examine some effects in detail, such as the location of the reinforcements and the magnitude of the prestressing.

(4) In the current tests, the pattern of the non-uniform pressure is not exactly that in pipe jacking and the tests were carried out with model pipes. In future, tests more accurately simulating prototype conditions should be carried out.

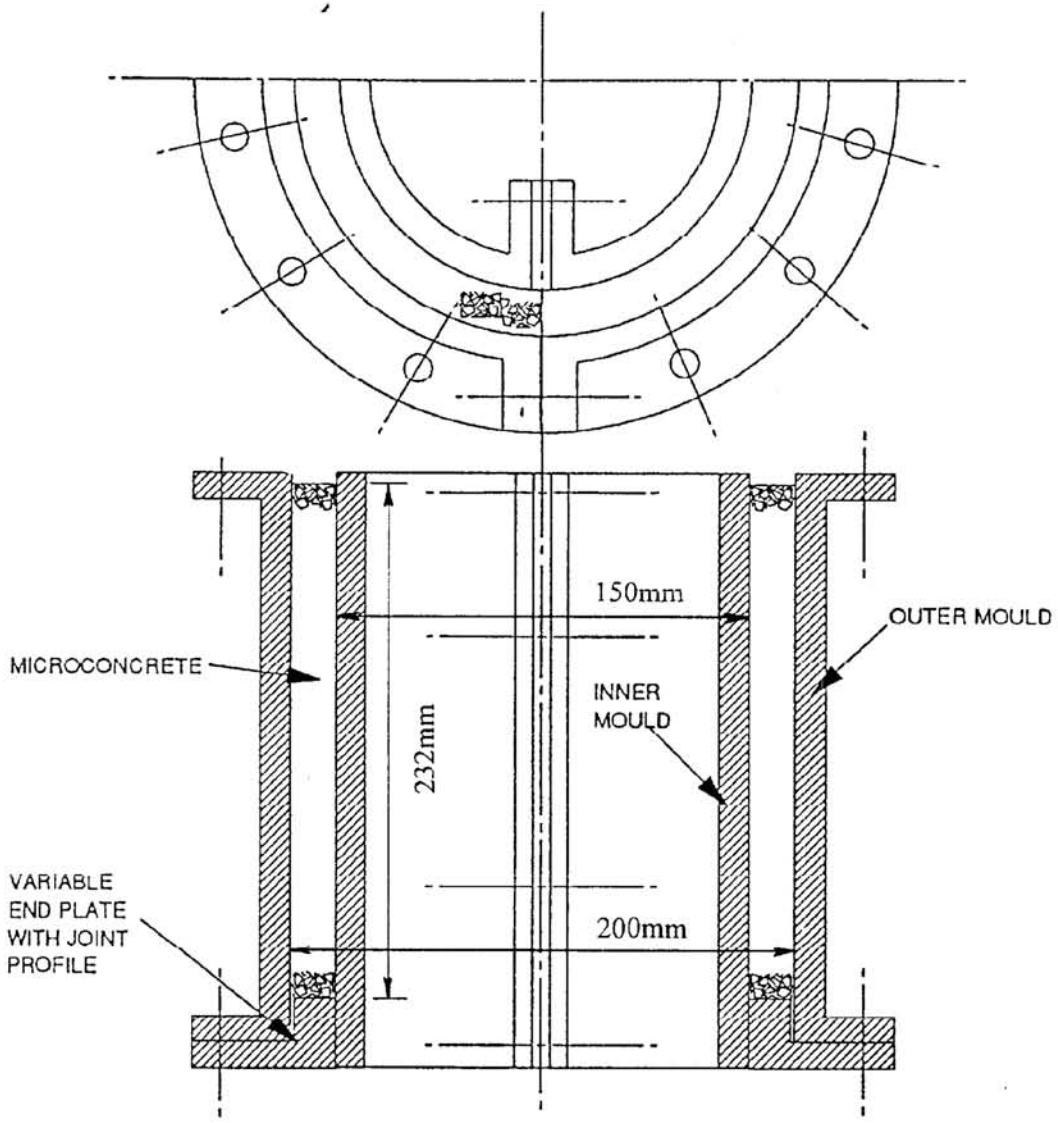

Figure 8.1 Model pipe mould (from Ripley 1989)



Plate 8.1 Mould used for construction of model pipes (from Ripley 1989)

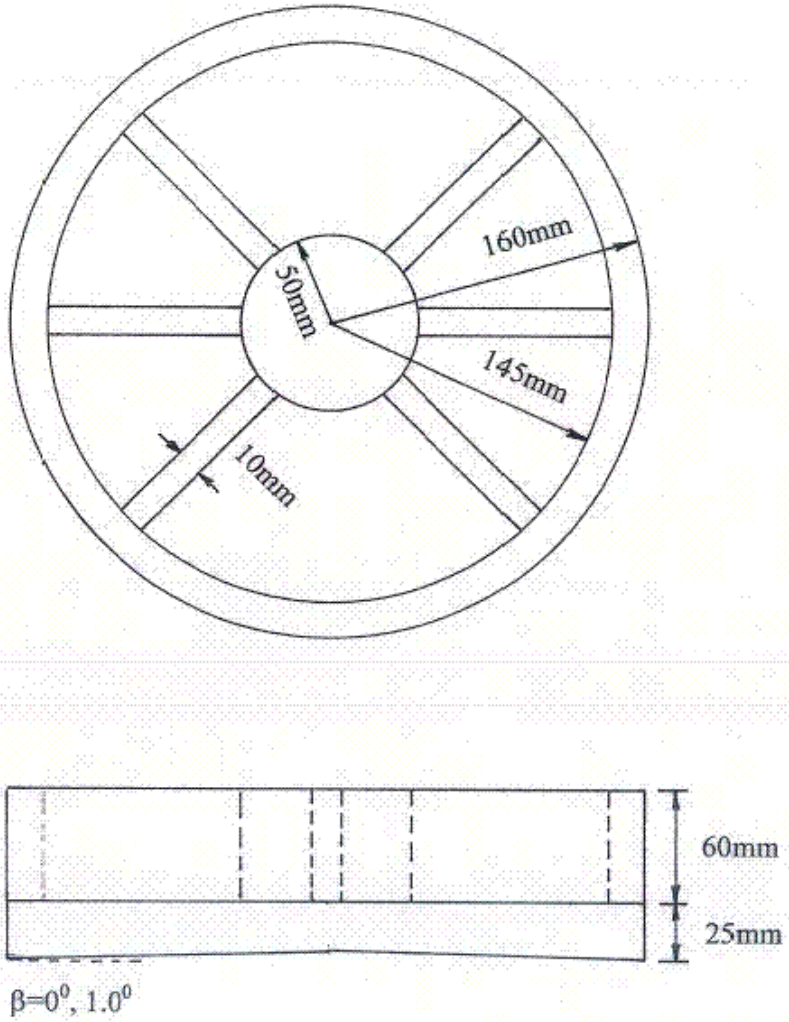

Figure 8.2 Design of load plates



Plate 8.2 A steel load plate

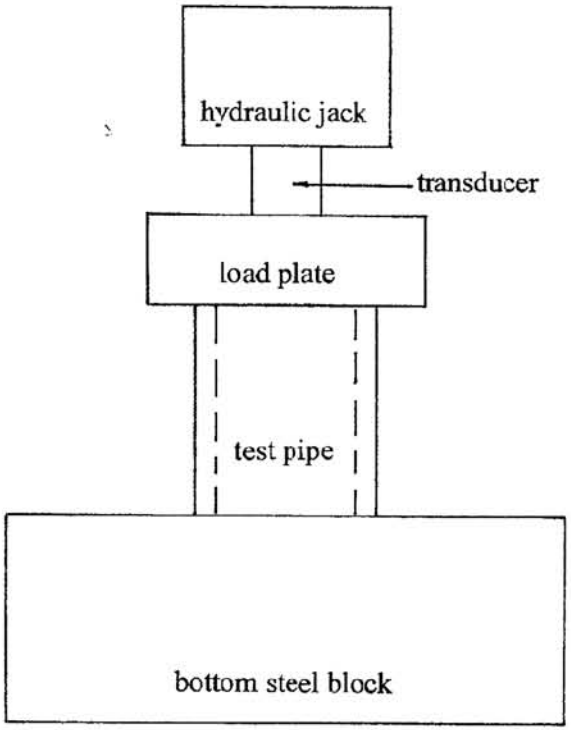

Figure 8.3 Arrangement of the test apparatus

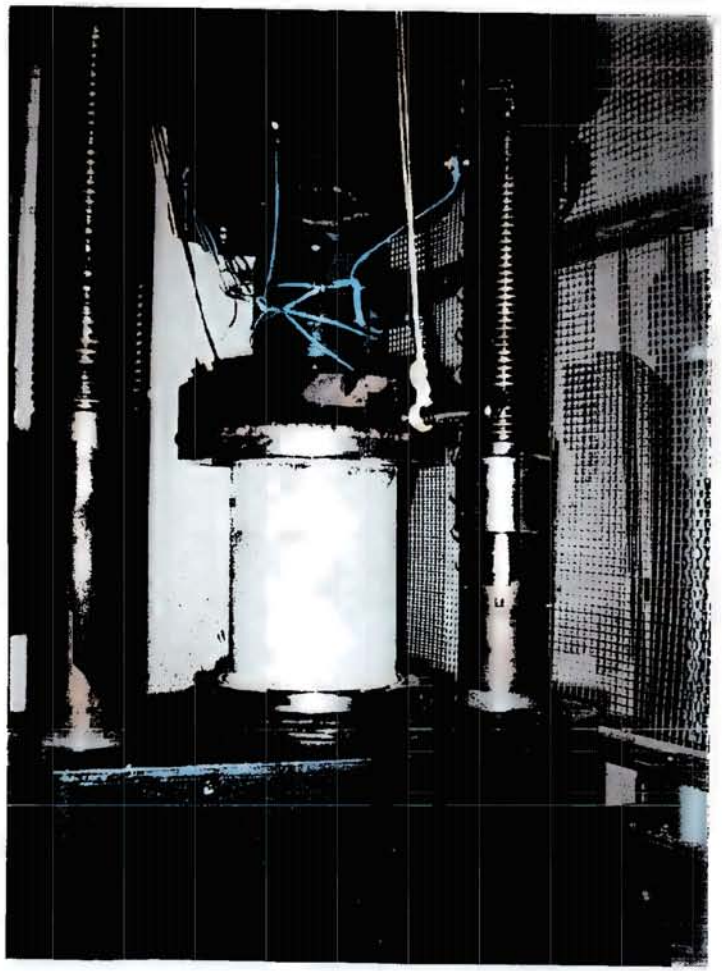

Plate 8.3 A general view of the test apparatus

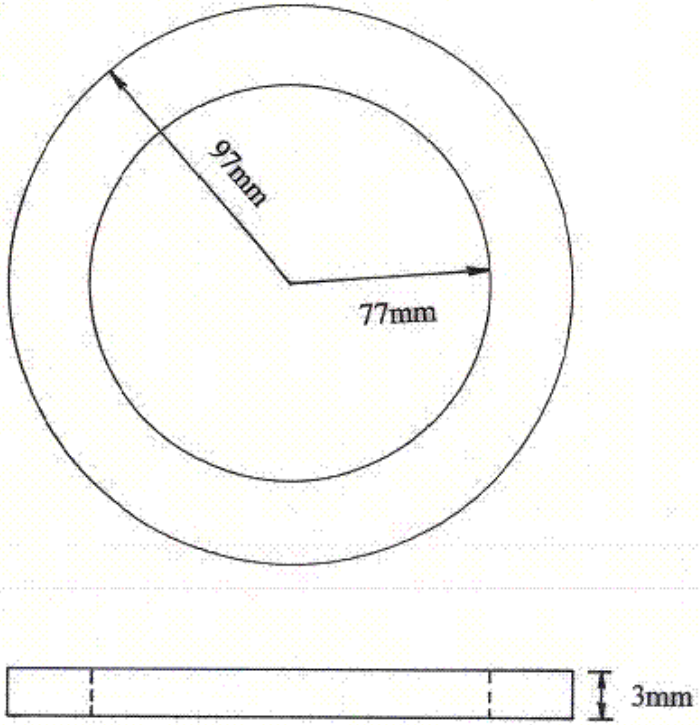

Figure 8.4 Design of the packing ring



Plate 8.4 A plywood packing ring

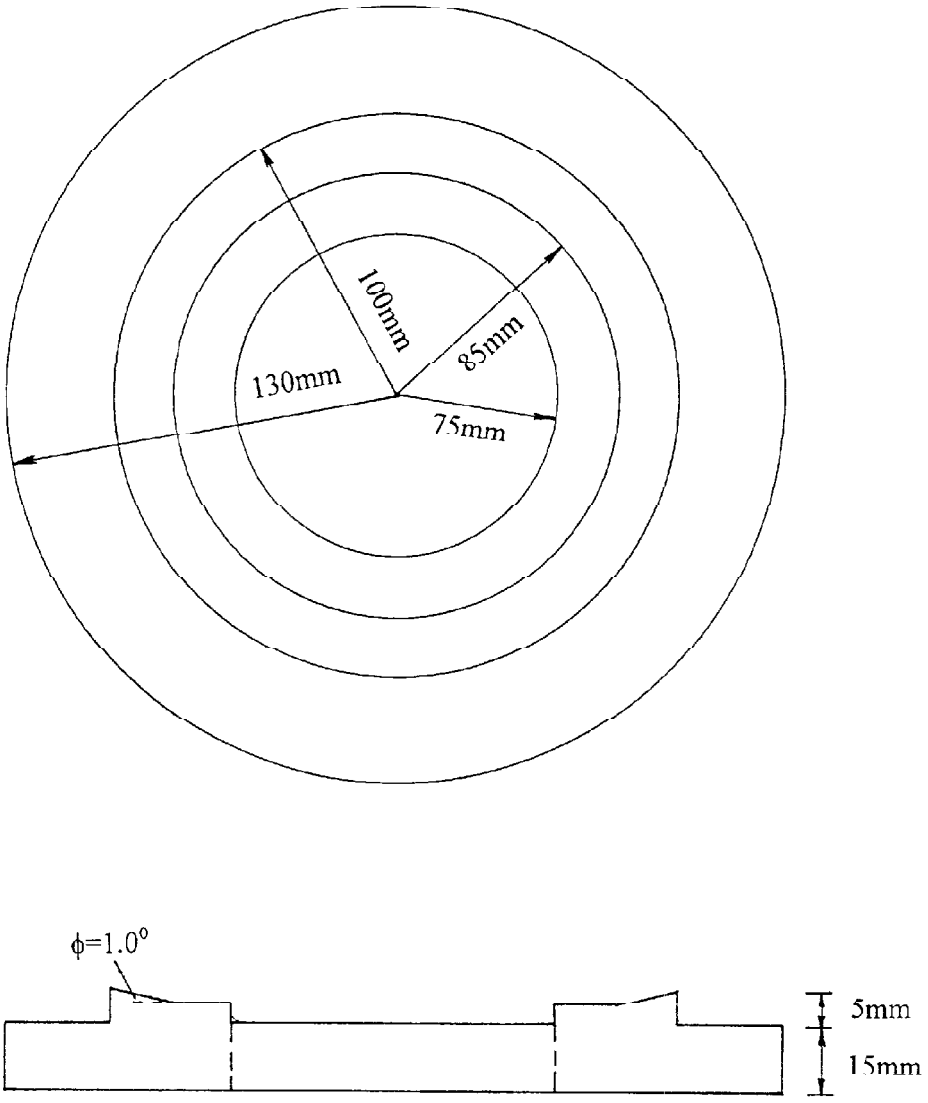

Figure 8.5 Plate for alternative pipe end geometry

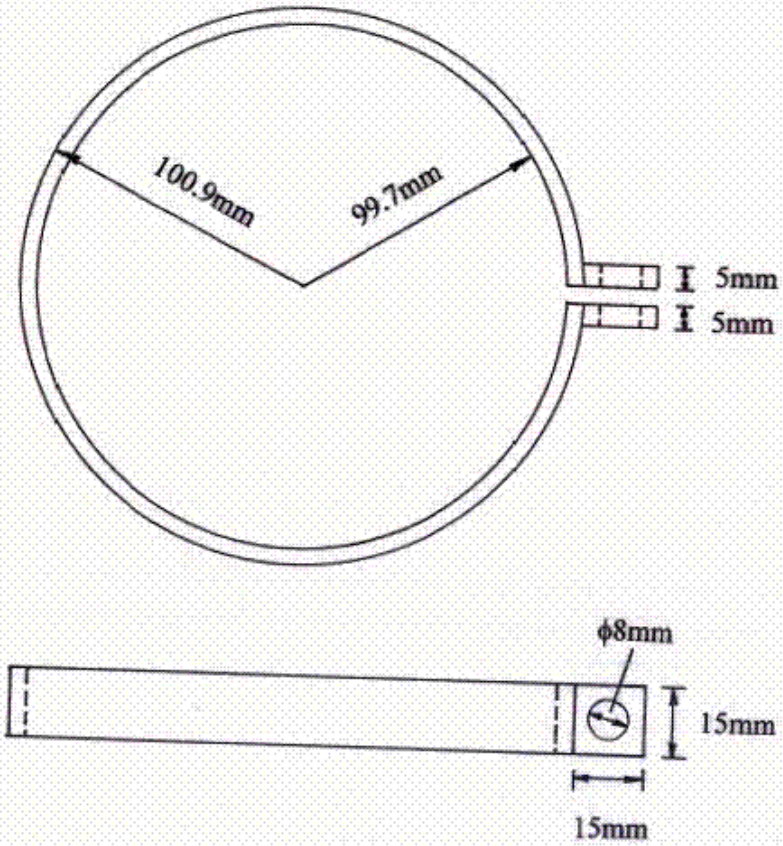

Figure 8.6 Steel band for prestressing

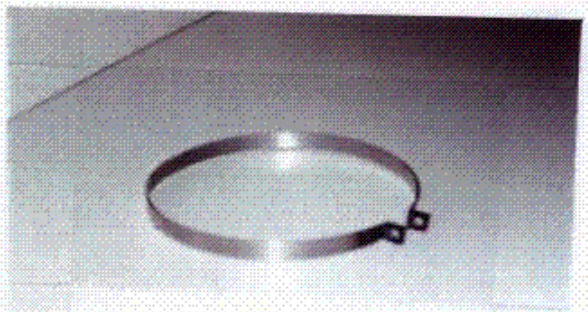

Plate 8.5 A prestressing steel band

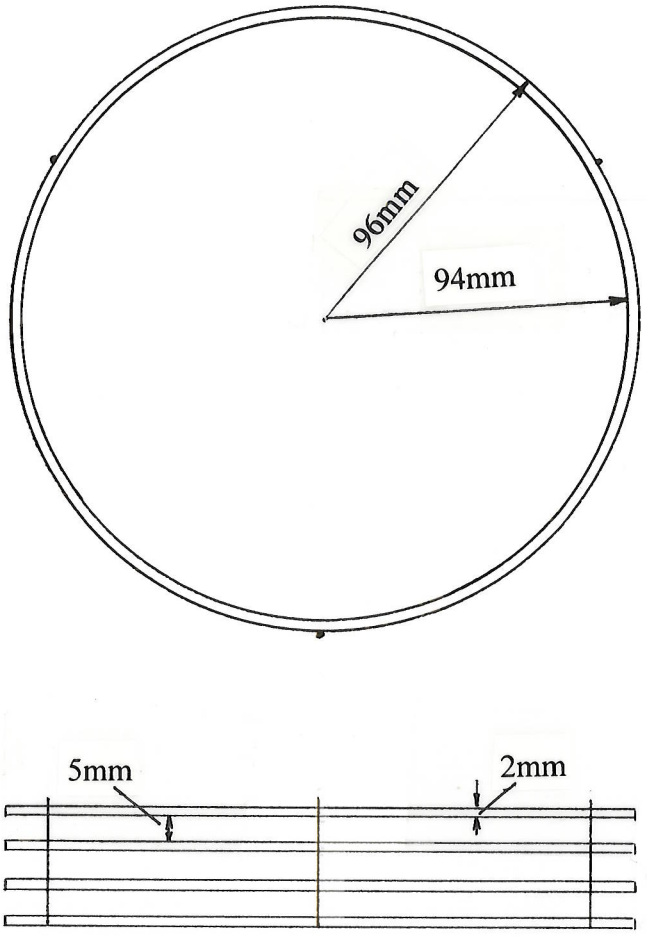

Figure 8.7 Steel cage for local reinforcement

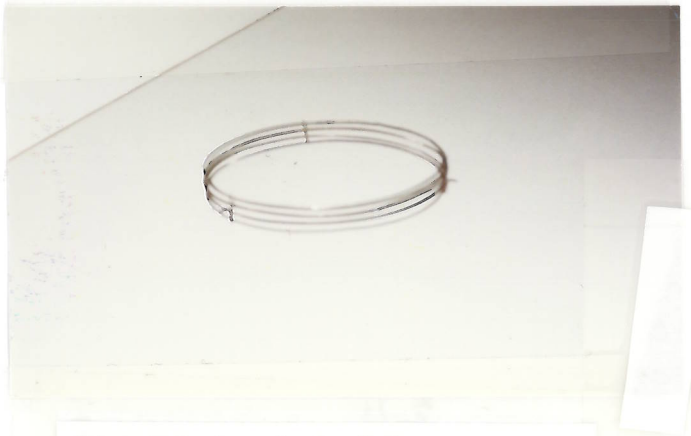

Plate 8.6 A typical reinforcement cage



Plate 8.7 Three Typical failed pipes