NATASHA KIDD

A MANUAL

Users Guide

A word in my ear

17.05 15 Apr:
A word in my ear contains
certain directives.
These are not sidelined.
They retell misbehaviors; flaws
or things noticed as acts
of resistance or relief. They
are possibilities for action.
Consider: acting on them.

Caution
This is messy. How can this be exposed with generosity and clarity?

This manual provides the instructions for constructing an artwork. The instructions map backwards from packing the car and cleaning the floor to sourcing the parts in preparation for its construction. The manual takes a look under the bonnet of making a work, using different methods for detailing this process. It contains:

a. Instructional information – for the construction of the work. Each section of the manual includes a list of materials/tools necessary to carry out the tasks and written and diagrammatic instructions to follow.

b. Technical information – these sections give practical or mechanical descriptions of component parts. Technical information sits alongside the instructional information and is formatted in pale blue text boxes.

c. 'Cautions' and 'a word in my ear' – the manual uses 'cautions' and 'a word in my ear' to track, materialise and retell the complexity and vulnerability of generating this work.

Caution
How can tacit knowledge be exposed?

'A word in my ear', reflective and insistent, recalls or retells thoughts, queries, conversations, things read, seen or made. They make thought visible by giving form and value to tacit thinking often only known to the knower. 'A word in my ear' runs adjacent to the instructional information in a continuous column. They are numbered in two ways: either with the time and date of when the thinking takes place, or by a number that correlates to a particular section of the instructional text with direct reference to the construction process.

The 'cautions' draw attention to particular problems or questions and are formatted in yellow text boxes that interrupt the instructional information.

Caution
Are the cautions the politics?

'A word in my ear' and 'cautions' crop up preventing any possibility that this object is explicitly known, they stop its foreclosure. These unruly and stabilising thinking spaces expose that which otherwise might occupy a suppressed or unheard form of knowledge/learning. In the process of materialising this learning, the manual becomes live by responding, fluctuating and shifting in order to share this event.

Caution
What is the artwork here?

d. Significant words – throughout practice the significance of words change, they become more or less relevant because of something being tested in the studio, something being read, experienced or recommended by others. Words hover around a work; they rise to the surface or are buried under others that seem more relevant at the time. At the point in time, when this object goes to print, nine words remain. As these words are repeated throughout the instructional text they are highlighted in a colour and different ways of thinking them through are offered in colour coded sections that form intervals throughout the manual. The texts /artworks / objects that are included in these sections have been offered by others, digested and stuck. They take a variety of forms depending on the way in which they have been accessed or received. For example, a page in a book and the notes made in the margin are scanned and presented; a talk recorded and transcribed; an artwork presented or a text retold. Some contributions are simply included and there is no explicit analysis offered, they are included as a form of analysis in their own right. Others are unpicked and this thinking flows back into the manual text.

The manual is a methodology for revealing a practice. By treating the object it makes as generative, the manual exposes the construction of that object whilst simultaneously exposing itself. It asks the reader to consider the possibility of making an artwork through a series of instructions that expose complex processes. The possibility of making the artwork can be acted upon and realised. The manual attempts to understand an object (with the help of others) yet acknowledges that this object does not sit still. It remains open to responses, contributions and adaptations. You are invited to contribute. Offers to supply the manual further material are thought through over time and if critical added. Those that are relevant will be accorded to anyone who asks to be included.

Users Guide

12.38 6 Mar:
The manual is not just about production. It must expose inaction, uncertainty, vulnerability and learning.
What does inaction look like?
What does learning look like?

12.29 6 Mar:
How can this contain pace? Speed, intensity, slowness, procrastination.

15.05 28 Jan:
Retelling: Kate Love's
The Experience of Art as a Living Through of Language.
'Experience is always already in language'. Making a work (this process) is 'both in language but yet not quite in language'. It is at the 'limits of language but unequivocally not beyond it'. (KL, 2005)

15.08 28 Jan:
The experience of making a work is mobile and fluid.
Up to a point.

11.14 5 Feb:
The manual applies a didactic language to the task. What does this enable? A word in my ear and the cautions must expose fluidity.

11.17 5 Feb:
Is the didactic instructional voice a monologue?
The cautions and word in my ear is a dialogue.

08.24 18 Feb:
This manual is not an interpretation. It is not an explanation or a historical

Caution
I am the author.

At the point of print the manual is a capture of an ongoing process. Much has been looked at, offered, talked about, left out and forgotten and much more remains to be explored.

Manual contact:
natashakidd.manual@gmail.com

Caution
Is it possible to give words to this activity?

narrative. It scrutinises a work from the inside. This manual must be in action. Use the present tense.

06.24 4 Mar:
This manual must expose the relations that form around the object. There are so many. Are they relations? The work is an excuse to find things out with others. There is always more than one voice in it. Multiple voices in fact. How is a mutual determination established? Maybe it's naive to think there is mutual determination. There is. That cynicism undervalues the role that others play and their commitment and generosity that is essential. This has to recognise that commitment and generosity.

12.43 7 Apr:
Things are always worked out with others -
Charlie
Dad
Tim
Jon
Jo

Does this give learning form? It materialises this voice?

06.21 5 Mar:
This is another language.
It is another way to materialise this voice.

13.27 28 Mar:
Retelling: Kate Love's The Experience of Art as a Living Through of Language.
This is 'an experience with art that can function as a form

Users Guide

of analysis in its own right'.
(KL, 2005)

Take care this voice doesn't lose its nerve, run astray and become the 'explanation machine' (KL, 2005) it is so desperate not to be.

16.23 15 Apr:
At the start of the process there were 12 words circulating around the work, now there are 9. Some of these words already feel out of date, left behind or buried underneath something that feels more critical.

14.36 28 Jan:
This is valid.
This is valid.
This is valid.
To whom?

12.51 4 Apr:
Retelling: Kate Love's The Experience of Art as a Living Through of Language.
'The word Making occupies seventeen pages in the Oxford English Dictionary, so there are multiple possibilities for a lifetime of making: make a cup, a conversation, a building, an institution....' (KL, 2005)

The technician (my dad) drinks eleven cups of tea during the installation of the work.
I make all the tea.
(I felt appropriate here)

12.57 4 Apr:
Thoughts are exposed in the manual they do not 'run... towards understanding'.
(KL, 2005)

This is the equivalent to the work the work is doing.

12.58 4 Apr:
Retelling: Kate Love's The Experience of Art as a Living through of Language.
Does the manual make visible 'activated space' or the moment where 'consciousness meets language meets the world' when 'you are mixed up, in real time, in the business of making sense of the world, as it makes sense of you'? (KL, 2005)

17.33 17 Mar:
Retelling: Kenneth Goldsmith's Uncreative Writing.
This manual 'exposes the miles and miles of language under the hood'. (KG, 2011)

15.01 24 Feb:
This is impossible to manage.
Retelling: A conversation with the graphic designer (Charlie)
This must be restrained.
It will be fine. Get some sleep.

12.51 25 Feb:
This can't be restrained.

24 Sept 2017:
'Manuals have an impossible task - a Haynes Car manual might tell you to undo bolt A, but it doesn't tell you how to fit the spanner into such a small space, and it doesn't describe lying on your back on the ground under a car in the rain'.
Retelling: A conversation with my dad (the draftsman).

14.40 28 Jan:
Retelling: Kate Love's The

Users Guide

Experience of Art as a Living
Through of Language.
Is a word in my ear
‘transmission’ noise?

18.05 4 Apr:
The cautions and a word in my
ear must not have a hierarchy.
They look at what this is doing.
No one type of knowledge is
more important.

18.06 4 Apr:
Changing the way the object/
artwork/ machine/ work/
painting/ system/ thing is named
prevents it from being classified
or assimilated too quickly.

01.06 15 Mar:
Is this replicable?

18.04 4 Apr:
Retelling: Rosalind Krauss’s
The Mind/Body Problem:
Robert Morris in Series.
Does the word in my ear
‘exchange the mysterious
domain of what can be known
only to the knower for the overt
space of shared events’?
(RK, 1994)

12.15 4 Apr:
This is not about education as
the practice of ‘domination’.
(PF, 1996) This must be an object
of reflection.

Retelling: Paulo Freire’s
Pedagogy of the Oppressed.
Does this reform its reflections
in the reflection of others?
This is what it cares most about.

09.52 26 Feb:
Through this work the manual

looks more broadly at practice as research. Does this conform?

06.41 5 Mar:
Retelling: Anthony Huberman's Take Care.
This has found a methodology that has a 'life to live'. It is not an 'explanation machine'.
(AH, 2011)

12.42 Yesterday:
This cares.
This cares too much.

11.30 4 Apr:
You or I is avoided.
It has to be porous.
The writer/maker, reader/maker are blurred.

0.7.06 14 Apr:
This misbehaves.

11.28 4 Apr:
Who will bother?

Contents

Caution
The manual is non linear. It should not be read from front to back but moved through using the system of numbering and coloured tabs as a guide.

Take down

Maintenance

Filling the system

Fitting the tank and pump

Constructing the pipes that feed the paintings

Installing the pipe system

Fitting the clips that hold the system to the wall

Mapping out the network

Hanging the panels

Packing the panels for transport

Constructing the panels

References

Words

Accumulate

Care

Dependent

Inside

Make

Notice

Surface

System

Vulnerable



Words



Take Down

Take Down

Caution
When in transport keep sudden movement to a minimum. Drive with care over uneven surfaces. Take extra caution over speed bumps. Ensure the paintings stay upright.

Tools and equipment:

Dustpan and brush
14.5 litre bucket
Cleaning cloths
Floor cleaning liquid
Dual moulded stripping knife 3”
Bin bags (industrial strength)
Posi-drive screwdriver
Flat headed screwdriver
Polyfilla (ready mixed or powder form)
Sandpaper/wood block (120 grit and 240 grit)
Dual moulded filling knife 2”
Emulsion paint (corresponding to the walls that the work is installed on)
Paint brush 2”
12’ x 9’ Polythene dust sheets x 4
Cloth tape
Parcel tape
32 litre plastic storage box with lid
Plastic bag (sealable) 25cm x 40cm
Spirit level
0 - 26mm manual plastic pipe shears
10 x 10 litre empty paint containers with lids
Plastic cup
4 Crates
8 x 3.5mm x 25mm screws for the split battens
Jigsaw with wood blade
Extension lead
Cotton gloves
Latex gloves
Scissors
Tape measure
Ruler
Pencil
Paper
Access to: hot water, a ladder, mop and mop bucket, long handled brush and dustpan.

Take Down

1.0 This work requires the care of others.

09.20 12 Mar:
director/producer/caretaker/maker

09.21 12 Mar:
Can a forward slash resolve the naming issues suggesting a spectrum, fluidity and multiples?

Can this learn from queer theory which refuses dominating power structures by challenging naming devices?

09.21 12 Mar:
Avoid naming.
Does 'avoid naming' do enough to expose the thinking through of this decision?
Can it be presumed that this thinking is wrapped inside this precise statement?
This is the problem of the manual. Wrapped in every precise statement is a knot of thinking.

1.1 Get wet knees.

1.1 Don't let anyone else clean up.

1.2 Leave the stalactites that have formed in the gap between the floor and the skirting.
Look for them on the next visit.

21.20 28 Mar:
Do it - is not a 'learning system'. (HUO, 2013)
How is it listening?

Retelling: Hans Ulrich Obrist's Do it Compendium

Caution
How is the writer/author/facilitator/artist/maker named?
How is the reader/maker named?

1.0 Pack the car. Stand the crates upright and wedge them in place. Pack the fixings and connectors, the roll of pipe, the tank, the pump and the containers of used paint. Use the back seat of the car as well as the boot. Gather and pack the tools and other equipment. Inspect the floor, make sure there is no evidence of paint remaining. Brush up the final debris. Leave the space in its original condition.

1.1 Pay attention to the thick paint accumulated under the paintings. Use a mop to soak the dried paint with hot soapy water. Score the paint with the sharp edge of a stripping knife to break the dry surface. Use a cross hatch action. Wait for the water to soften the paint. Work across the floor methodically, scraping up the soaked paint from the floor with the flat edge of a stripping knife. Collect up and dispose of the congealed paint. Use a cloth to wipe up the paint residue. Keep the water hot.

Caution
Wear old clothes and no socks and shoes.

1.2 Remove any screws from the wall with a screwdriver. Fill the screw holes with polyfilla (filler is available in both powder and ready to use form, either is suitable, drying time varies depending on the type of filler and the environmental conditions of the space). Sand the rough or uneven surfaces back using sandpaper and a sanding block. Use low grit sandpaper (120) to remove the majority of the filler. Use high grit sandpaper (240) to smooth the surface to an even finish. Leave the wall flush. Scrape off and sand down any dried paint left on the wall as a result of the machines operation. Using a paint brush to apply two coats of emulsion paint to areas of the wall where there are visible imperfections.

1.3 Tape a polythene sheet around the cut pipes collected on the floor. Pack the connectors in a plastic storage box. Collect the pipe clips and screws together in a plastic bag and seal. Tape the lid of the tank firmly in place with cloth tape, seal around the outside edge. Ensure any holes in the tank are stuffed tight and sealed with polythene. Wipe the outside of the tank down to remove any remaining wet paint. Remove the dried splashes of paint on the pump with a damp cloth and a fingernail, do not scratch the protective plastic surface. Pack the pump in the box provided, pack the loadsure pipe and the two sections of hose with the pump.

1.4 Cover the floor with a polythene sheet. Tape the polythene in place to avoid tripping. Unclip the eight 15mm talon hinged pipe clips (Drawing 1.0). Remove the first 15mm vertical pipe from the Reducing Tee (push fit connector). To unlock this connector twist the neck (that holds the smaller pipe in place) anticlockwise. Use fingertips to push the small collar (where the 15mm pipe inserts) towards the body of the fitting and pull the pipe firmly in the opposite direction (Drawing 1.1). Position

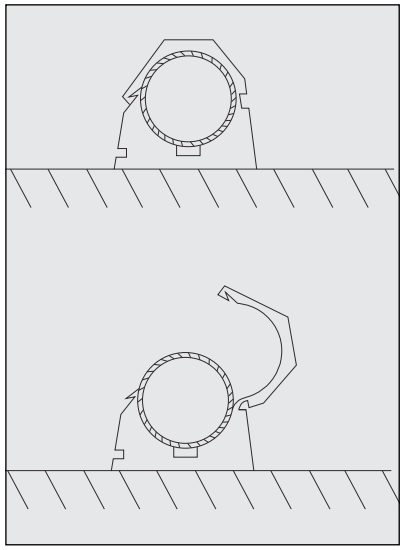

Drawing: 1.0

a bucket under the connector until the dripping paint stops.

Caution
Spillages occur when the pipes are cut and the connectors detached.

1.5 Cut a piece of polythene sheet (approximately 300mm x 300mm) stuff the plastic inside the hole of the connector. Secure quickly in place with cloth tape to catch any remaining leakage, remove the bucket. Repeat this process until all three remaining 15mm vertical pipes are detached. Stand the pipes upright in an empty bucket to drain. Lay each pipe on a large plastic dust sheet on the floor after draining.

1.6 Work up from the floor and around the system. Using plastic pipe shears cut 300mm sections off the 22mm pipe (Drawing 1.2). To enable ease of access for the shears open the 22mm pipe clips

This is learning through listening.

[1.3] Forget to be careful.

07.28 19 Mar:
Following the advice of my nose.
Retelling: Conversations with W.G. Sebald.
Discover: Things V Objects by Rikke Hansen in Art Monthly 318, July - August 2008
Visit: http://superflex.net/tools/copy_right
Divert to:
http://www.bruno-latour.fr/
Get distracted by:
The Common Sense
Buy: Caroline Jones's Experience: Culture, Cognition and the Common Sense

07.03 19 Mar:
This must trust.

[1.9] This is social.

[1.13] This manual is making a system/ artwork/ thing/
The manual/ artwork/ thing/ machine/ system is making paintings/ artworks/ things.

15.38 1 June 2017:
Draining a painting.
Organise drinks in a room next door to where a painting is installed. Join the drinks for a short time then go and change into appropriate work clothing in private. Join the drinks again. Leave the gathering and attend to emptying a painting. Push one end of a 2 metre length of PVC plastic tube (10mm inside diameter) into the paint inside the painting. Make sure it is fully submerged into the liquid. Keep

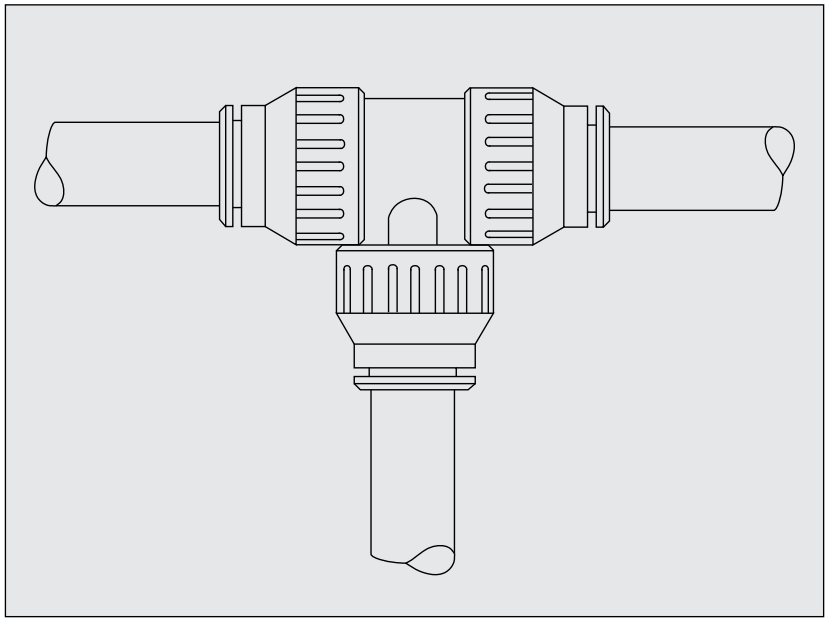

Drawing: 1.1

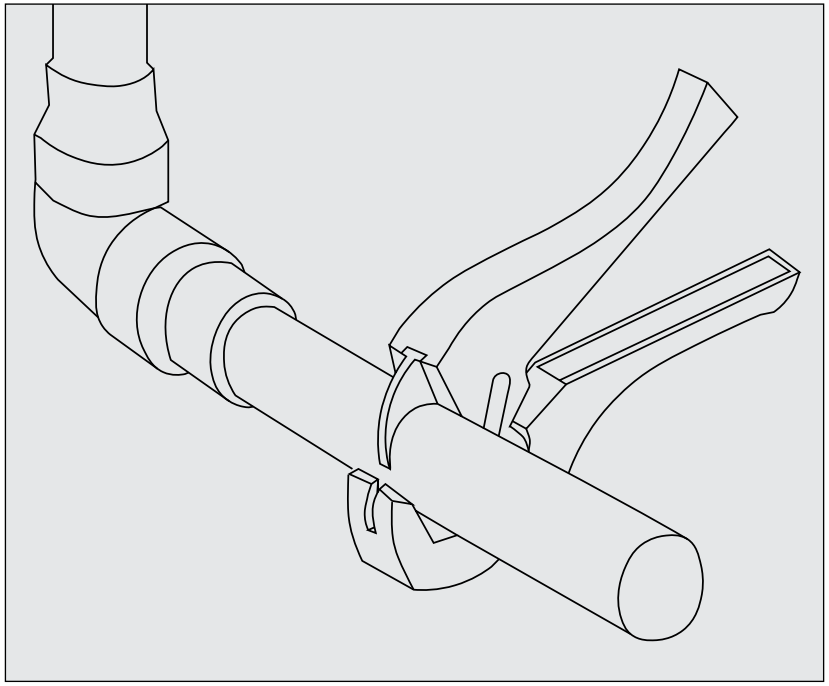

Drawing: 1.2

to release the pipe from the wall. Only open the clips in proximity to the section of pipe being worked on. Position a bucket under the pipe before each cut. Wash the shears in water regularly to prevent them clogging with paint.

Caution
As the blade on the shears blunt each cut becomes more difficult.

[1.7] Work on a ladder and remove the (push fit) Elbow connection. Unlock the neck on the bottom of the connector, turn anticlockwise, push the collar towards the body of the fitting and firmly pull the vertical pipe out. Follow the same process to unlock the connector from the horizontal pipe. This time pull the connector away from the pipe.

Caution
Take care moving up and down the ladder.

[1.8] Remove the entire horizontal supply pipe. Open the pipe clips, cutaway small sections of pipe and remove each of the four (push fit) T connectors along its length. Remove the remaining Elbow connector. Continue to cut and remove sections along the downpipe. Wash the detached fittings in hot soapy water to clean the paint from inside. Stand each section of cut pipe inside an empty bucket to drain. Keep the cut pipes small so the bucket does not become unstable. Lay each piece of cut pipe on a large plastic dust

Caution
This cannot be done alone.

Take Down

Take Down

the other end of the tube clean of paint. Insert the clean end of the pipe into your mouth and suck. Suck hard. Make sure the tube fills completely with paint and not air. Suck until the paint runs through the tube. To achieve a flow of paint it is necessary to suck the tube until paint fills your mouth. Once the tube is full of paint lower the end of the tube quickly into a container (bucket or empty paint can) on the floor to maintain the flow. Be certain to have enough containers to fill as the painting empties. Don't stop until the whole painting is drained. Pay no attention to the conversations in the next room. Wash your mouth in cold water. Notice the paint leaves a coating on your tongue.

07.58 12 Mar:
Retelling: Haynes Service and Repair Manual (Ford Escort and Orion Diesel) 2003
The word devoted is used at the beginning of every chapter.

1.17 Measure from the outside edge of each part. This leads to an inaccuracy of all of the dimensions.

1.17 Retelling: The initial conversation with the draftsman (my dad) who made each individual drawing for the manual by hand.

This conversation was the first request to the draftsman (my dad) to retell the construction of the object through a series of drawings. An instruction for each drawing

sheet on the floor after draining. Unscrew and collect together all the talon hinged pipe clips from the wall. Separate the 15 mm clips and the 22mm clips.

1.9 Ask for help. Remove the (push fit) Straight Coupling connector that joins the pipe on the wall to the 25m roll of pipe on the floor. All the push fit connectors disconnect in the same way. Unclip the 22mm talon hinged pipe clip holding the end of the roll of pipe into the open top of the tank. Do not allow this end to submerge into the paint in the tank. Firmly hold both ends of the 25m length of pipe. Take the end of the pipe from the tank and hold it over an open empty 10 litre paint container. Hold it in a position that will allow paint to flow out through the open end. Slowly raise the other end of the pipe off the floor whilst lifting the large roll of pipe up as high as possible to drain the paint trapped inside.

Caution
The pipe roll is filled with paint, heavy and difficult to manoeuvre.

Watch the paint drain into the empty paint container. Unroll each loop of the pipe and lift as high as possible until all the paint has drained. Take time, work through the entire 25m length. Cut two sections of polythene sheet (approximately 300mm x 300mm) and stuff into both ends of the roll of pipe, tape in place with cloth tape to seal. Tape the loops of the roll neatly together for transit.

1.10 Turn the yellow handle on the valve between the tank and the

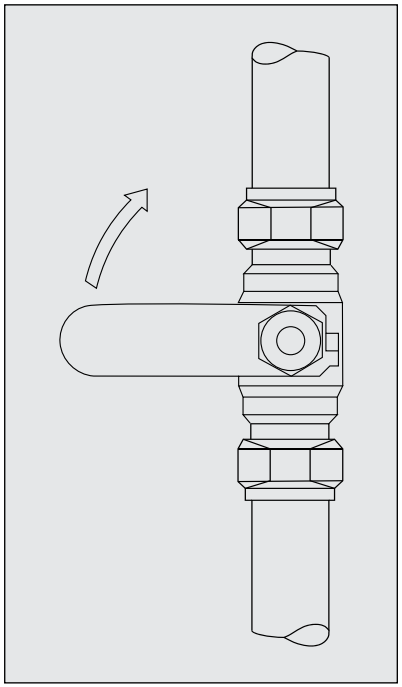

Drawing: 1.3

pump to the off position (Drawing 1.3) (perpendicular to the body of the valve). Unplug the pump from the mains electricity. Cover the area around the pump with a polythene sheet.

1.11 Unclip the two quick release black connectors that clamp the braided hose and grey supply pipe to the loadsure tubing that runs through the pump. (Drawing 1.4) Twist and pull the clamps firmly away from the pump. Wait for the dripping from the load sure pipe to stop. Use a flat head screwdriver to unfasten the single turn screw to open the door to the pump. Push the levers on the internal rollers away from the loadsure tubing to disengage, apply pressure (Drawing 1.5). Revolve the pump head slowly by hand, in a clockwise direction and feed the loadsure tubing out of the pump. As the rollers squeeze

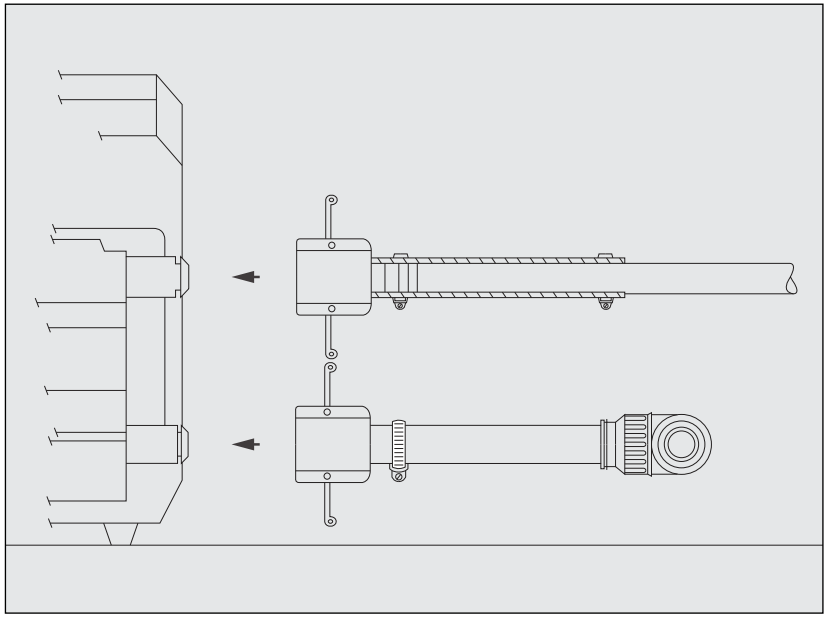

Drawing: 1.4

Take Down

was relayed by a telephone call early on a Sunday morning (every Sunday for 12-months). Each drawing was produced during that day. Once finished the drawings were scanned then emailed for approval. There are 64 drawings in total.

16.42 18 Mar:
Can this be anecdotal?

16.37 18 Mar:
Retelling: Juhamani Pallasmaa's The Thinking Hand. After someone recommended this book, it sits in wait and unopened, but its relevance is persistent.

16.38 18 Mar:
There is urgency to look but an inevitable slowness about the search. This process provokes a need to legitimise the things I know through experience using a different type of knowledge.

This is not about legitimising.

13.16 7 Apr:
The original drawings are made by hand then traced in illustrator by another hand.
This process is important, there is a distance established here. The computer drawing is a mediated construction.
Retelling Juhani Pallasmaa's Drawing Hand in The Thinking Hand.

This whole object is mediated.

12. 15 18 Mar:
Can this be fictional?

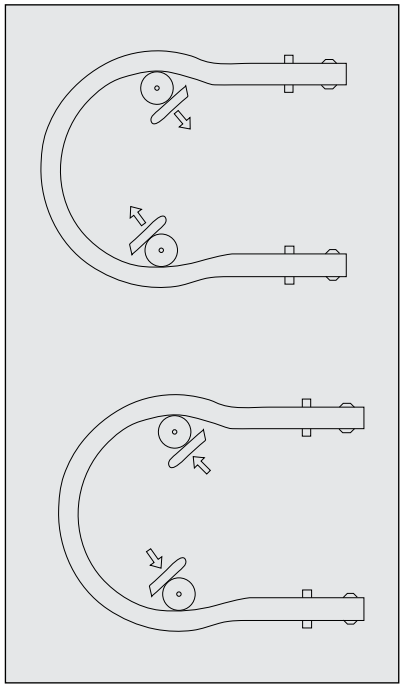

Drawing: 1.5

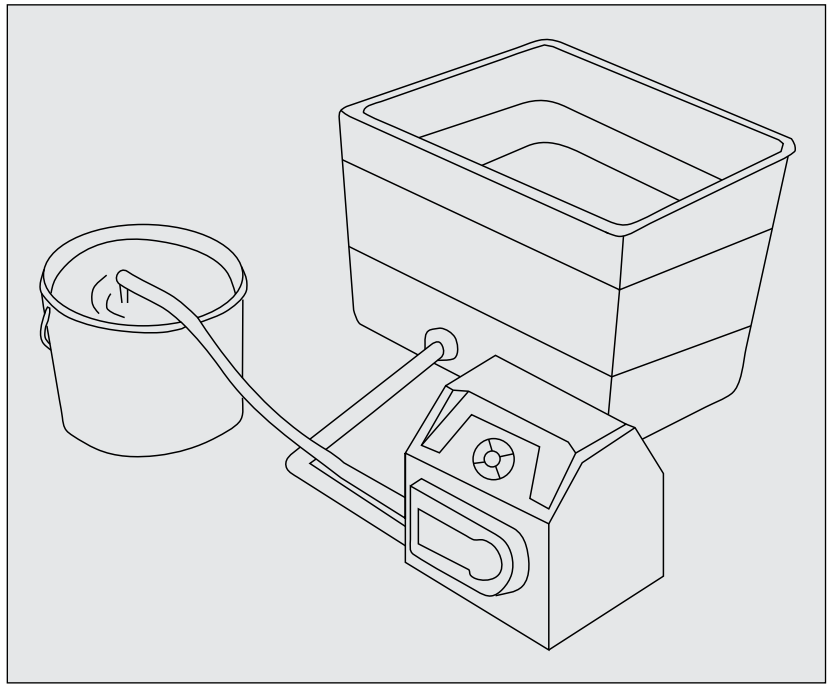

Drawing: 1.6

the tube the pump head is more difficult to rotate. The fittings on the ends of the loadsure are held in place by the hinge of the door. Maneuver them out of place as the tube becomes disengaged from the rollers. Wash the loadsure tubing with hot soapy water to prevent paint drying inside. Run water through the tube for 2 minutes to destabilise any paint that has dried inside the tube. Look inside to check all the paint is removed especially in the areas that are indented through the repeated action of the pump rollers.

1.12 Keep near to hand the 10 empty 10 litre paint containers. Using pipe shears cut the 22mm grey plastic pipe that runs from the top connection of the pump head. Cut the pipe 300mm from the jubilee clip that holds the grey plastic pipe inside the braided hose. Use sharp pipe shears that will slice through the grey plastic pipe easily. Position an empty paint container under the pipe as you cut. Clean the pipe shears after use to avoid paint seizing the mechanism. Leave the cut pipe resting over the empty paint container and allow the pipe to drain (Drawing 1.6). Turn the yellow handle on the valve between the tank and the pump to the On position (in line with the body of the valve). Plug the pump into the mains electricity. Set the direction of flow. Notice the small arrow on the pump's LCD screen that indicates the direction the pump is operating in. Press shift and (4) on the control panel to change the direction of the flow to clockwise. Press the start button to switch the pump on. Check the flow rate is 0.4 rpm (Drawing 1.7). Use the up and down arrows on the control pad to slow down or speed up the flow rate. Watch the pump turn through the small window on the pump head. Wait for paint to flow through the cut pipe, fill the container below. Replace the container with a new one when it is full and attach a lid firmly, tape the lid in place. Prop up one edge of the tank to drain as much paint as possible towards the pump outlet. Scoop out the remnants of paint left in the tank with a plastic cup.

Caution
Wear latex gloves, paint is an irritant.

When the tank is completely empty use the pipe cutters to cut the

Take Down

12.08 9 Mar:
(This is)….. ‘noticing, listening in, tuning in’
Retelling: Learning the Art Museum: Experiments in talking/ writing ethnography by Pat Thomson with Amy McKelvie, Leanne Turvey, and Alice Walton.

[1.19] Makes a skid in the wet paint on the floor before it dries.

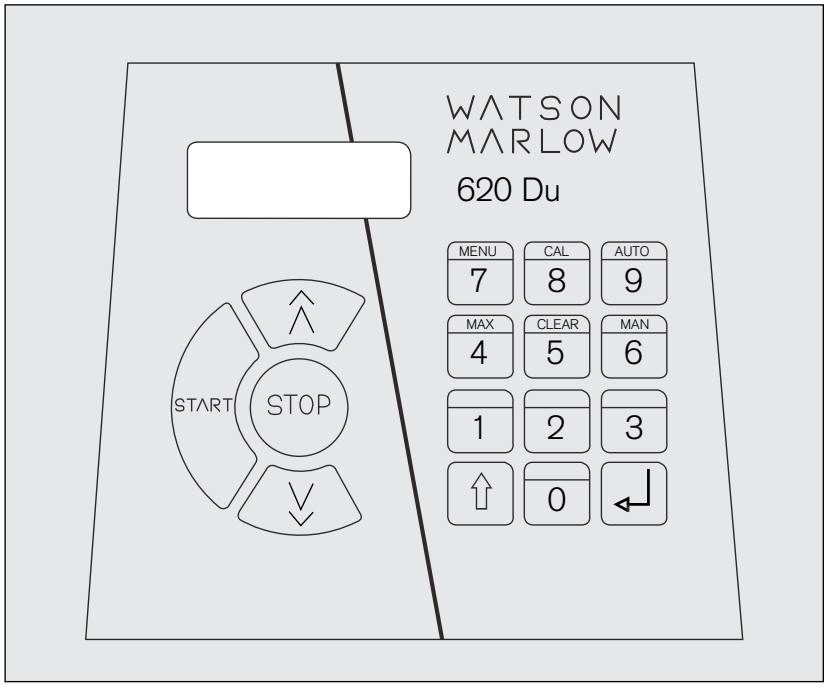

Drawing: 1.7

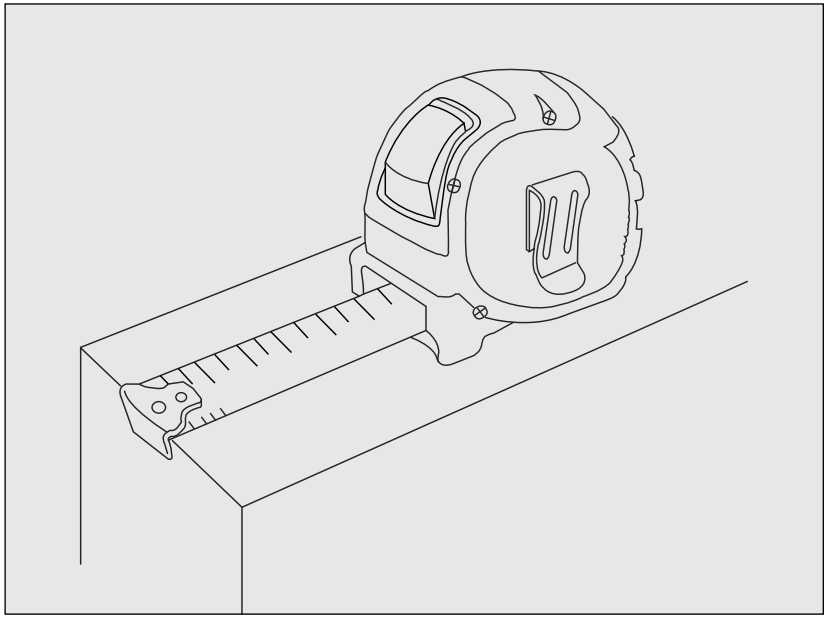

Drawing: 1.8

plastic pipe that runs from the tank as close to the tank as possible. Cut a section of polythene sheeting (approximately 300mm x 300mm) and stuff this inside the short pipe still connected to the tank, secure with tape. Remove the tank.

[1.13] Measure the paintings on the wall.

Caution
This cannot insist?

Measure from the top edge of each painting to the bottom of the longest stalactite. Measure the depth and width of each painting (Drawing 1.8). Compare the size of the paintings to the size of the crates. Establish whether the crates are large enough to transport the paintings without damage to their surface or the stalactites. Take one painting off the wall. Wear cotton gloves to protect the surface from being marked. Lift the painting upwards and off the split batten that holds it on the wall.

Caution
Dried paint adheres the paintings to the wall.

Hold it firmly at arms length. Do not tip. Pass the painting to somebody else to hold. Unscrew the split batten attached to the wall and screw it to the detached front panel of the crate. Fix the top of the split batten 250mm from the top of the panel and center. Ensure the split batten is firmly in place on the panel and the same way up that it was on the wall, check the batten is level with a spirit level. Work quickly, the painting is heavy. (Drawing 1.9)
Take hold of the painting and position it on the split batten on

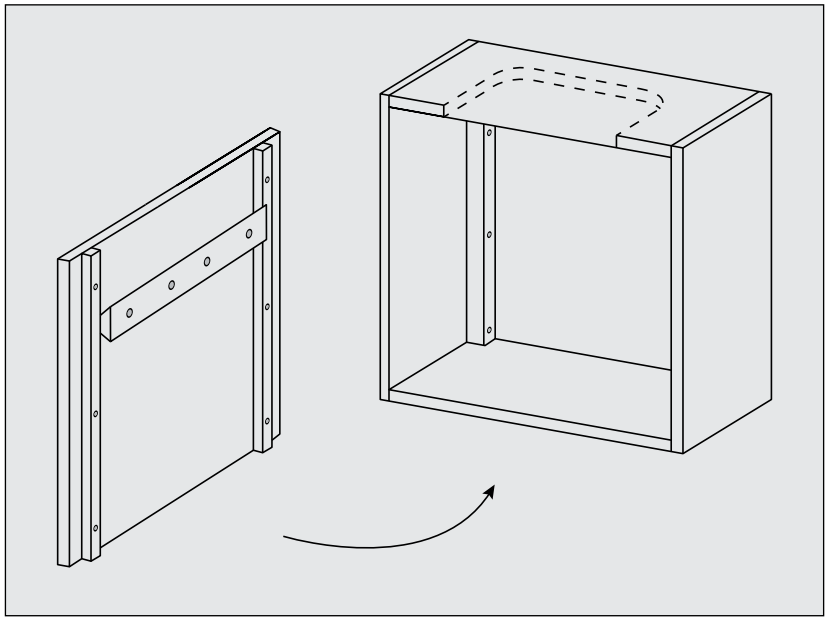

Drawing: 1.9

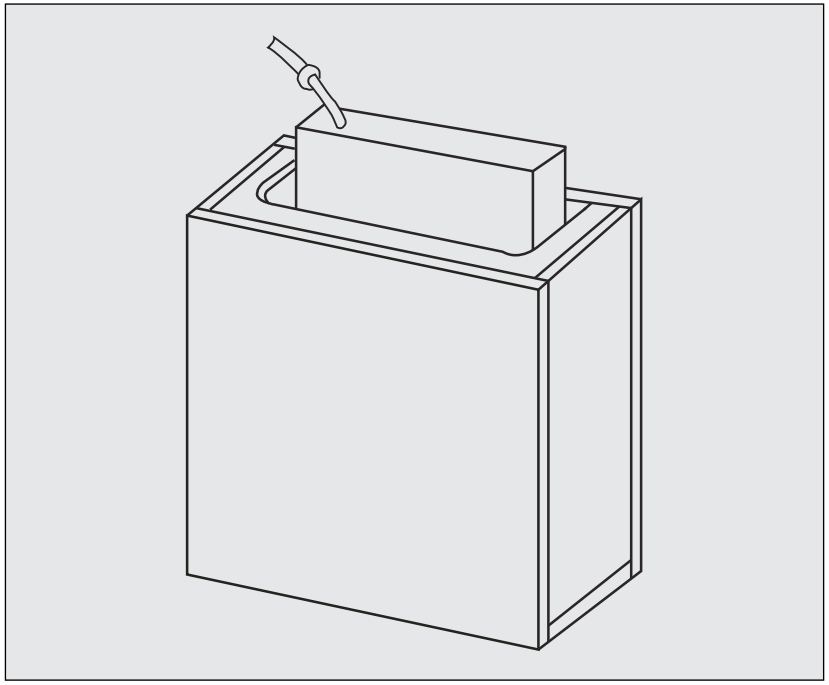

Drawing: 1.10

the crate panel. Ensure the panel is held firmly and does not tip forward as the painting is positioned. Slide the crate over the painting, screw shut. Repeat, until each painting is secure in a crate. Keep the crates in a standing position. Ensure that the plastic pipes into the top of each painting protrudes from the top of each crate. Check they are sealed. (Drawing 1.10)

Caution
Paint forms a skin that seals the open pockets shut. The supply pipe to each painting becomes trapped in place.

1.14 Stand the crates upright and unscrew the 4 screws that hold each front panel in place (Drawing 1.11) On the top edge of each crate mark out a section to remove that is large enough for a painting and the plastic supply pipe that protrudes from it to extend out of the top of the crate. Use an electric jigsaw to cut each section out (Drawing 1.12). Dispose of the cut out sections.

1.15 Adjust the screw head on each 15mm Isolating valve to a horizontal position using a flat headed screwdriver. In the horizontal position the gate valve is fully closed. Cut the silicone pipe inserted into each painting with sharp scissors. Cut each pipe just below the point where they join the grey plastic pipe above (Drawing 1.13). Notice any drips of paint from the cut pipes and wipe clean quickly before they drip onto the paintings below. Stuff a small piece of polythene (approximately 100mm x 100mm) into the cut pipe protruding from the painting. Do not tape.

Take Down

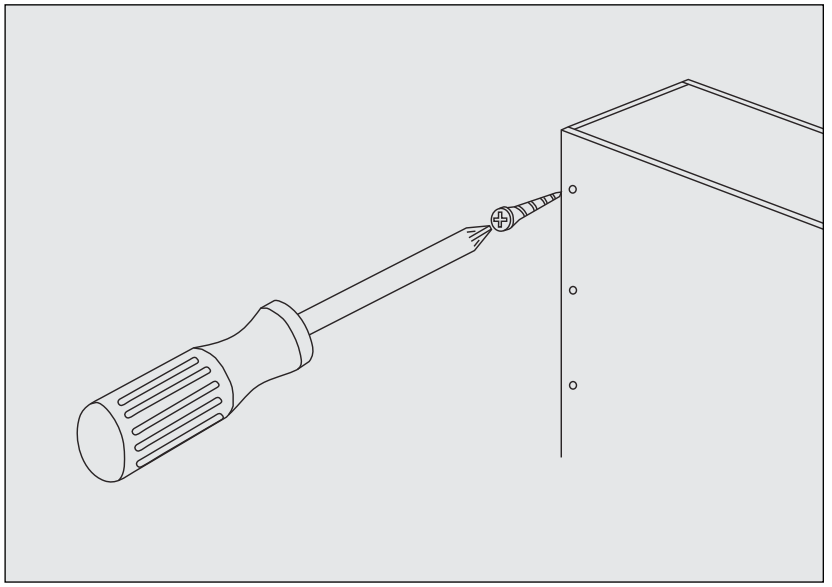

Drawing: 1.11

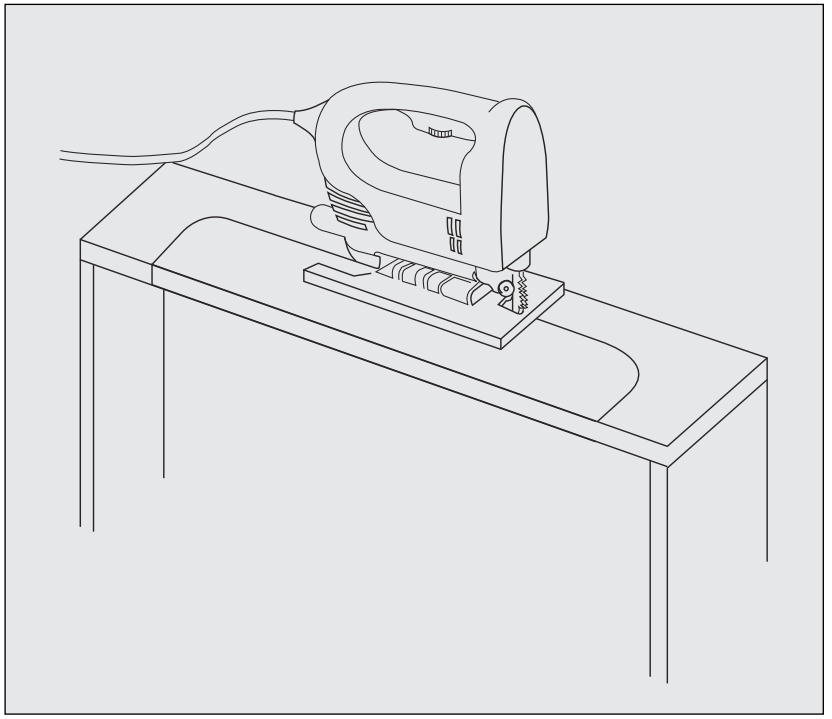

Drawing: 1.12

Caution
Tape leaves a sticky residue on the pipe that cannot be easily removed.

1.16 Plug the pump into the mains electricity supply. Hold down the start button on the pump to unlock the keypad. Press shift (4) on the control panel of the pump to change the flow direction arrow to anti clockwise. Press start on the pump. Ensure the flow rate is 0.5 rpm. Allow the pump to operate in reverse for 2 minutes. Notice the paint in the tank increase in volume as the system clears of paint. Whist the pump is operating in the reverse direction open the valves on the vertical supply pipes to the paintings. Use the flat headed screwdriver to adjust the screw heads on the valves to the vertical position. Listen to the sound from inside the paintings as the pump sucks out paint.

Caution
As you listen to the paintings take care not to lean onto their wet surface.

Once the sound of air being sucked through the pipes is heard close each valve. Press stop on the pump.

1.17 Measure every part of the system. Measure how one component part corresponds with another. Record these measurements on paper.

1.18 Gather the tools and equipment needed for the take down. Collect the crates and paint containers from storage. Ensure access to hot water,

Take Down

a ladder, mop, bucket and long handled brush.

1.19 Return to the work after 21 days.

1.20 Request the system is switched off 24 hours in advance of arrival.

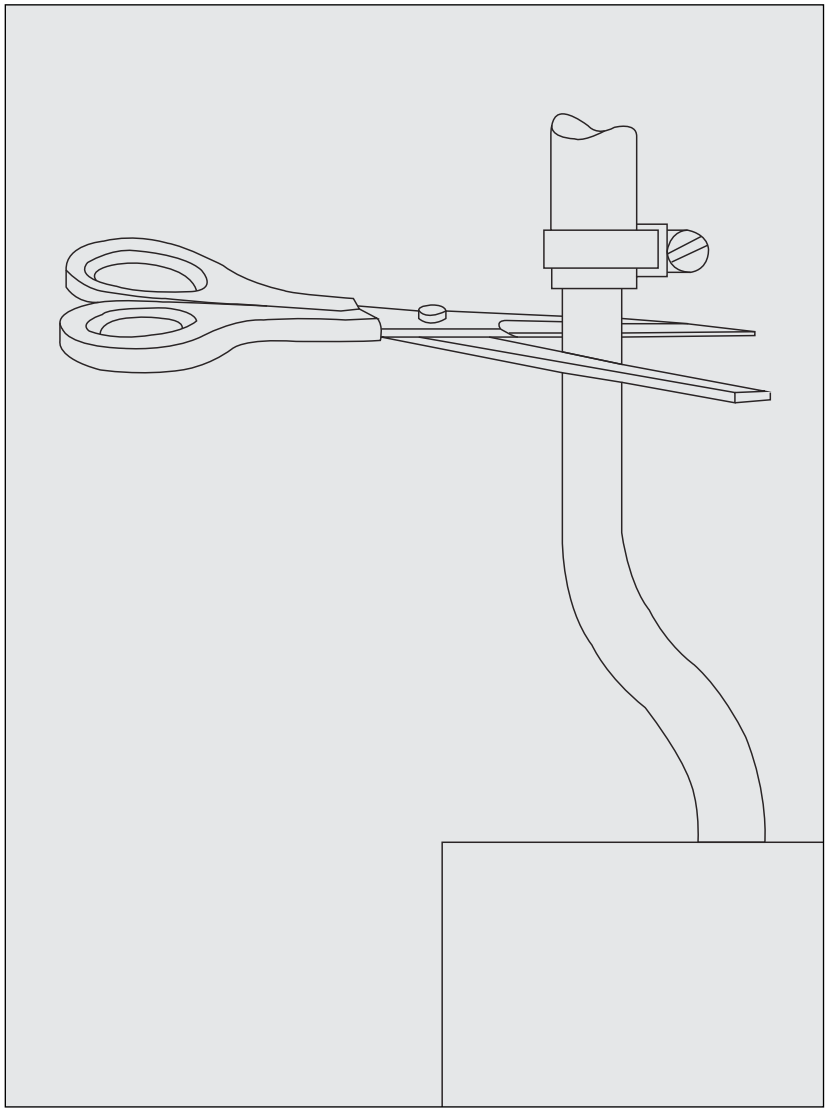

Drawing: 1.13

Take Down





Accumulate





Bisanbos, 2015
Jo Addison

Hanging object
Mixed materials
200mm diameter (approx)

‘But I never liked doing things systematically. Not even my Ph.D. research was done systematically. It was done in a random, haphazard fashion. The more I got on, the more I felt that, really, one can find something only in that way—in the same way in which, say, a dog runs through a field. If you look at a dog following the advice of his nose, he traverses a patch of land in a completely unplottable manner. And he invariably finds what he is looking for. I think that, as I've always had dogs, I've learned from them how to do this. So you then have a small amount of material and you accumulate things, and it grows, and one thing takes you to another,and you make something out of these haphazardly assembled materials’.

Following the advice of my nose.
W.G. Sebald in J.Cuomo, A conversation with W.G Sebald in Schwartz, L, S (e.d). (2010) *The Emergence of Memory -Conversations with W. G. Sebald* 1 edition., SEVEN STORIES PRESS, p94.

The local ecosystem of our own computer is stable, prescribed and limited to its routine. It has mechanisms to protect it from de-stablisation. What is most fascinating is when our local computer communicates with other computers across a network. A simple email is a perfect example; when a text is sent by mail it returns ‘a much more complex document than it went out’. The original email text has been ‘buried in’ other language - words, signs and numbers. For the computer the text in the email is no more or less important than the language that surrounds it in its new form. A new piece of text has now been created through the interaction of one computer or machine and another. The text acts like a snowball gathering new text as it moves from one machine to another in the network. Yet back at the local site the text can be returned to its original format ‘with one click of a button the soiled text can be cleaned’.

Interactions: talking to another machine.
Goldsmith, K. (2011) *Revenge of the Text in Uncreative Writing,* New York, Columbia University Press, p33.

Accumulate



Pipe used for stirring paint
22mm plastic pipe
Emulsion paint
April 2nd–15th July 2015

Accumulate



Maintenance

Caution
The paintings require activation they do not/cannot insist

Tools and equipment:

Length of 22mm pipe (600mm in length)
14.5 litre bucket
2 x 10 litre containers of emulsion paint
(corresponding to the walls that the work is installed on)
Access to water
Flat headed screwdriver

Maintenance

17.25 10 Apr:
2.0 This is too needy.

2.0 Are the people material in this process?
The people are not the material.
Is this job a delegated performance?
Is this exploiting them?
What is exchanged and what is the power relation?
Is this a burden for those tasked with caring for the machine?
Can there really be a mutual determination to keep the work in action for all these days.
Is it a duty?
Why should anyone else care?
This relation is not free of tension. Retelling: Claire Bishop's Delegated Performance: Outsourcing Authenticity.

2.0 Offer a painting to anyone who has taken part.
Is this a gift?
Is this payment for work not remunerated?
The trickiness of labour relations is unavoidable
This is not flippant.
This is far from flippant

16.32 12 Apr:
Where does the machine begin and end?
This is not outside of the machine.
This is enclosed within it.
Retelling Gerald Raunig's A Thousand Machines

2.0 Making the work work.
Retelling: David Barrrett's When Robots Rule, an article about Chris Burden's Two Minute Airplane Factory.

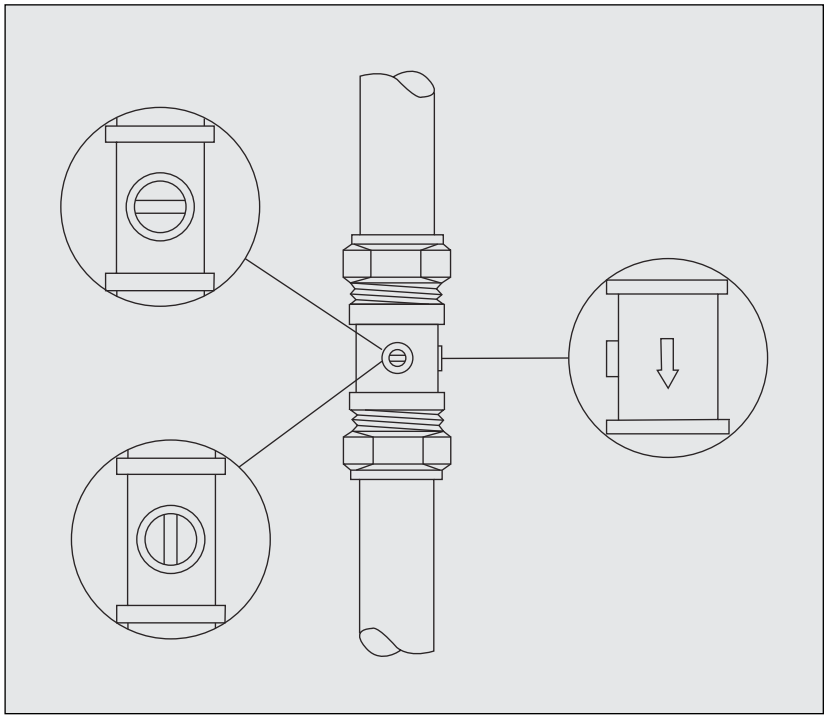

Drawing: 2.0

Caution
Are the people material?

Caution
Is this job a delegated performance?

2.0 Leave the daily maintenance and activation of the work in somebody else's hands for 21 days. Explain precisely that the system requires daily attention, that the machine is dependent on care, and if the maintenance is not carried out the system will cease to function. Clarify that this responsibility can be shared with others. Do not write down the instructions. Talk through each task in detail.

Caution
This must not be authoritarian.

2.1 Use a 600mm section of 22mm pipe to stir the paint in the open top storage tank at 09.55 am and at 17.00 pm daily for 21 days. Make sure the thick paint that has accumulated at the bottom of the tank mixes with the more liquid paint at the top. Do not clean after use. Store the pipe used to stir the paint in a bucket out of sight but where it is easily accessible for the continued upkeep of the work.

Caution
Do not allow the paint level in the tank to drop below the supply outlet pipe to the pump.

2.2 Check the paint level in the tank daily when the machine is operational. Add more paint when the level has dropped by more than 100mm. Mix 5 litres of emulsion paint with 5 litres of water in a bucket. Mix this thoroughly.

Caution
Do not stir vigorously. Avoid splashes.

Tip the diluted paint in to the tank with care to avoid splashing up the sides. Maintain the crisp clean line that the paint makes along the tank edge. Wipe away any splashes or drips and ensure no smears are left behind.

2.3 Activate the paintings between the hours of 10.00 am and 17.00 pm for a total of 21 days. Attend to one painting at a time. Pay close attention to whether the surface of the painting is dry. If there is no evidence of moisture on the surface or dripping on the bottom edge then carefully turn the screw head on the isolating valve to the vertical position using a flat head screwdriver.

Isolating valve

An isolation valve is used in fluid systems to stop or restrict the flow of fluid material to a particular location. The valve is opened and closed by turning a slot headed screw that turns an internal ball mechanism. The movement of the slot into the horizontal position slowly restricts the flow until it is fully shut. Moving the screw into the vertical position opens the valve to allow a full flow of liquid.

This monumental art machine was intended to robotically assemble small rubber band airplanes that, once mechanically built, would be jettisoned into the gallery space beyond the machine. Human intervention was avoided with only the replenishment of materials a necessity for human contact. By early May (three months into the exhibition) the machine had failed to make a single airplane and the only example of a completed plane for the audience to view was a hand-made one by the artist himself. Human intervention, in fact, became crucial to the static 'broken' object. What kept the work alive was the endless flow of engineers and software experts that scurried around in an attempt to make the work work.

15.53 23 Mar:
Preserve the machine from disruption.

2.0 Retelling: Luis Camnitzer
Thinking about Art Thinking.
'Work' not only refers to an object, it is also a relation of labour, and 'art' is the discipline in which it is performed.
(LC, 2015)

This looks and feels like real work; laborious and industrial.

2.0 Retelling: Kate Love's
The Experience of Art as a Living Through of Language.
This work does not use an authoritative language that speaks as though the others

Turn the screw head slowly, notice the painting fill as you open the valve. Fill the painting over the brim, allow only a drip of paint to run over the lip onto the surface of the painting below. Pay no attention to the dripping on the floor. Close the valve back to the horizontal position as soon as paint has dripped over the top lip of the painting.

Caution
Wear inexpensive shoes. When the paint falls to the floor it splashes.

Check each painting at regular intervals. Activate a painting only when it appears dry. Monitor the drying time. Keep the paintings active. (Drawing 2.0)

Caution
Does this work internalise the story of paintings history?

2.4 Press the red stop button on the pump control panel and turn the pump off at 17.00 pm for 21 days. Unplug the pump from the mains electricity supply.

2.5 Switch the system on at 10.00 am for 21 days. Plug the pump into the main electricity supply and switch the power on. Check all the valves on the 15 mm supply pipes are in the horizontal position. Press the start button on the pump control panel. Check the flow rate is at 4 RPM. Watch the pump rotate through the window on pump head. Touch the pipes to feel the slight change in temperature as they fill with paint. Listen to the pipes to determine where the paint is.

Wait for paint to come out of the return pipe and back into the tank.

Caution
Preserve the machine from disruption.

2.6 Maintain a flow rate of 0.4 RPM (revolutions per minute). Press and hold down the start button when the pump is in action to unlock the keypad. Use the arrows to speed the flow rate up or slow it down.

Caution
What is the motivation to care?

Maintenance

Maintenance

aren't there.
It imagines who is listening.
Instructions are didactic.
They are authoritarian.
Who is listening?

17.25 20 Mar
Meaningfulness is generated
by the space in between the
didactic instructions, the
cautions, the drawings, a word in
my ear and what is not included.
This is not authoritarian.

2.1 Flies accumulate on the top
surface of the paint in the tank.

2.1 At times debris moves through
the system of pipes and is
discharged.
Pick a fly off the surface
of a painting.

12.32 12 Jan:
Preserve the machine from
disruption.

15.51 21 Mar
Retelling: Hito Steyerl's Is the
Museum a Factory.
This work denies the 'vantage
point of sovereign judgment'.
(HS, 2009)

2.3 Tinker.

2.3 Retelling: Ed Allington's Dream
Machine.
'As long as the machine comes
with a man or a woman, we are
going to be alright'. (EA, 2002)

This is not in opposition.

9.04 12 Apr:
Retelling Gerald Raunig's A
Thousand Machines.

Maintenance

But ‘human beings and tools are already machine parts on the full body of the respective society, the machine is initially a social machine constituted by the machine generating instance of a full body and by human beings and tools’. (GR, 2010)

14.07 3 Jan:
Preserve the machine from disruption.

[2.3] Build a machine that attends to itself. Retelling: Developing Drip Detect Machine.

[2.3] Mould grows on the front surface when the paintings are left inactive.
Leave the paint to stagnate.

15.09 8 Apr:
Preserve the machine from disruption.

[2.3] This is not efficient.

[2.3] This does not lose its body.
Retelling: Katherine Hayles’s How do we become post human?
This is information.
This is material.
This is not just a technical object

[2.3] This information becomes code in the new machine.
Retelling: Designing the Drip Detect Machine

This machine replaces a body.
It is not anti human.
Why does construction becomes design?

Retelling: Katherine Hayles’s

Maintenance

How do we become post human?

21.22 6 Apr:
Run this programme.
Process this.
Retelling: Katherine Hayles's How do we become post human?

2.3 Open the valve to a painting.
Watch as the painting fills.
Walk away.
Take no responsibility.

15.02 23 Jan:
Preserve the machine from disruption.

10.00 20 Mar:
Each drawing (original made by hand) is traced with a digital version. So much care in both.

2.5 How close is this to the actual object and to the experience of making?
What are the words doing?

2.6 The pump can operate at 320 revolutions per minute (RPM).
Test the system's limitations.

14.34 20 Mar:
Preserve the machine from disruption.

16.12. 26 Mar:
Is this knowing its knowledge?
Retelling: Steven J. Pearlman's Meaning Making and Making Meaning Meaningful: The Relationship Between Language and Thought in Critical Pedagogy
It's discovering it.

16.12 12 Apr:
Is this objectifying knowledge and skills?
Retelling Gerald Raunig's A Thousand Machines.

16.32 12 Apr:
A word in my ear is most prolific whilst cycling.

Maintenance

Maintenance

Care

Care

‘I was interrupted in the middle of opening this letter, having only had the opportunity to notice that it was written on torn paper. Its author wasn’t the sort of person who would normally take so little care over something like a letter, and given that it was a reply to a request I was alarmed that he may not have taken to it as kindly as I’d expected. On returning to the letter that evening I was reassured and very touched by a gesture so wholly in keeping with the nature of its sender’

Damien Taylor
Workshop: Curious about Care, 2013
Ruskin School of Art
A letter from Roger

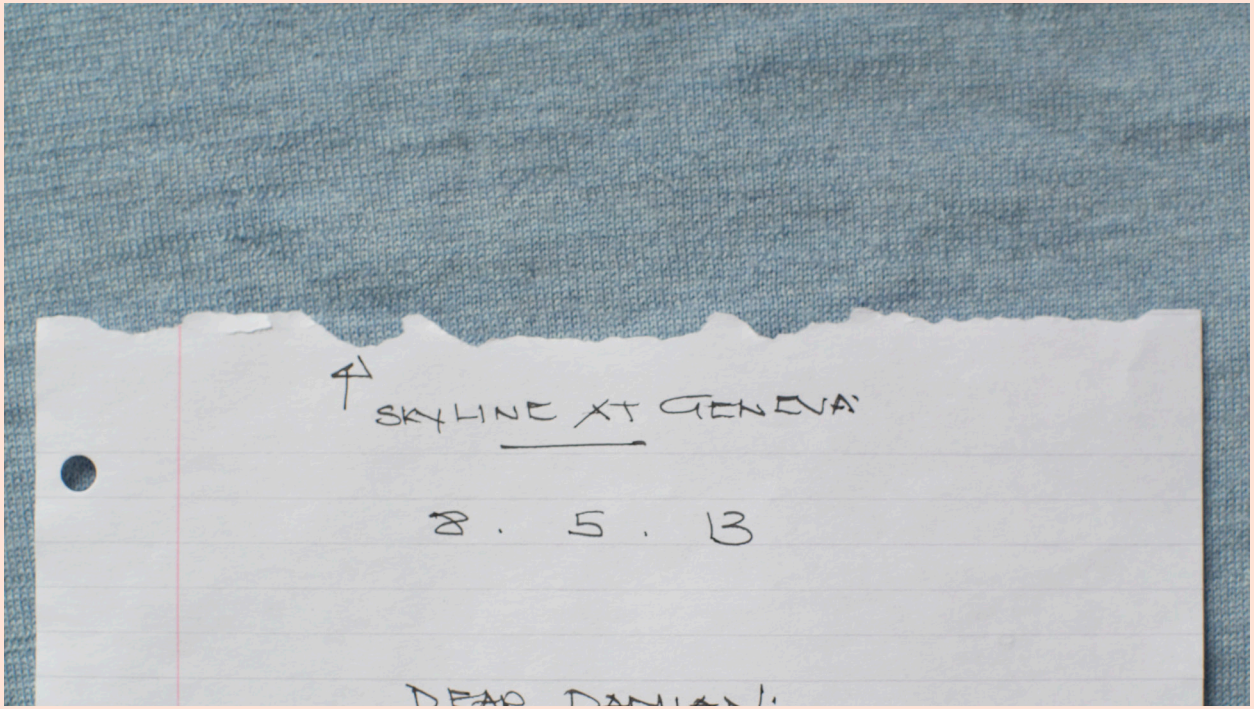
SKYLINE XT GENEVA
8. 5. 13

‘We were probably 14 years old. Sitting in English class with Mr. Collins. The new school was being built then and we had to spend that year in a temporary mobile with its particular hollowness. We had been taking turns at reading a play by Sean O Casey that morning. Juno and the Peacock as I recall. There was little magic in that place until the morning you arrived late for class. You’d been to the hypnotist show the evening before. There you were, standing bolt upright at the classroom door with one of your palms outstretched, your eyes wild and staring right there, at your open hand. You walked to your seat and carefully sat down not breaking contact with the hand in front of you. “Take care” you said. There, in your hand. Take care. You took the thing in your hand that wasn’t there and lifted it carefully onto your desk. We tried telling you that thing in your hand was not there. But you said there was a little man with a top hat, green clothes and a golden buckle on his belt. You were asked to take care of him, to make sure no harm comes his way until noon that day. The boy in the row in front turned round

Una Henry
Workshop: Curious about Care, **2013**
Ruskin School of Art

to your desk and took the thing that wasn't there and threw it across the room. You crashed over chairs and tables to the other side to catch the thing that wasn't there. You shouted out that you had to take care. There was real magic that morning in that hollow room. An encounter with a man, a top hat and a belt that all just disappeared at noon. Conjuring up the thing that isn't there and making it real by taking care – this is the powerful and magical place where creativity and art resides'.

Skincare
(or, trying to work out why I got annoyed by Sophie Calle)

Just a few weeks after her accident, while at Stoke Mandeville, Wendy developed bedsores. Sasha and I were distraught. It implied that she hadn't been turned frequently enough by nurses, either in St George's, the local hospital into which she had been admitted straight after her fall, and/or at the Stoke Mandeville specialist unit for spinal injuries. We googled. The recommended turning interval was 2-4 hours for those unable to move themselves. We guessed she had been turned every 6 or so – which was the schedule the nurses had been given by the hospital, probably due to staffing (or lack of it). It took months and months for the wounds to heal. Eventually, after more googling, we persuaded the ward sister to try Manuka honey applied directly into the sore. This seemed to have more effect than anything conventional medicine had to offer.

Pressure ulcers are open wounds that form whenever prolonged pressure is applied to skin covering bony outcrops of the body. Patients who are bedridden are at risk of developing pressure ulcers. Pressure ulcers are commonly known as bedsores.

Preventing pressure ulcers has been a nursing concern for many years. In fact, Florence Nightingale in 1859 wrote, "If he has a bedsore, it's generally not the fault of the disease, but of the nursing"[4] (p. 8). Others view pressure ulcers as a "visible mark of caregiver sin"[5] (p. 726) associated with poor or nonexistent nursing care.[6] Many clinicians believe that pressure ulcer development is not simply the fault of the nursing care, but rather a failure of the entire heath care system[7]—hence, a breakdown in the cooperation and skill of the entire health care team (nurses, physicians, physical therapists, dietitians, etc.).

Nina Wakeford, 2013

Nina Wakeford
Workshop: Curious about Care, 2013
Ruskin School of Art

Care

Care

Leon, G. in Obrist, Hans Ulrich (ed.) (2013)
Do It: The Compendium 01 edition, New York, NY, Distributed Art Publishers. p 175

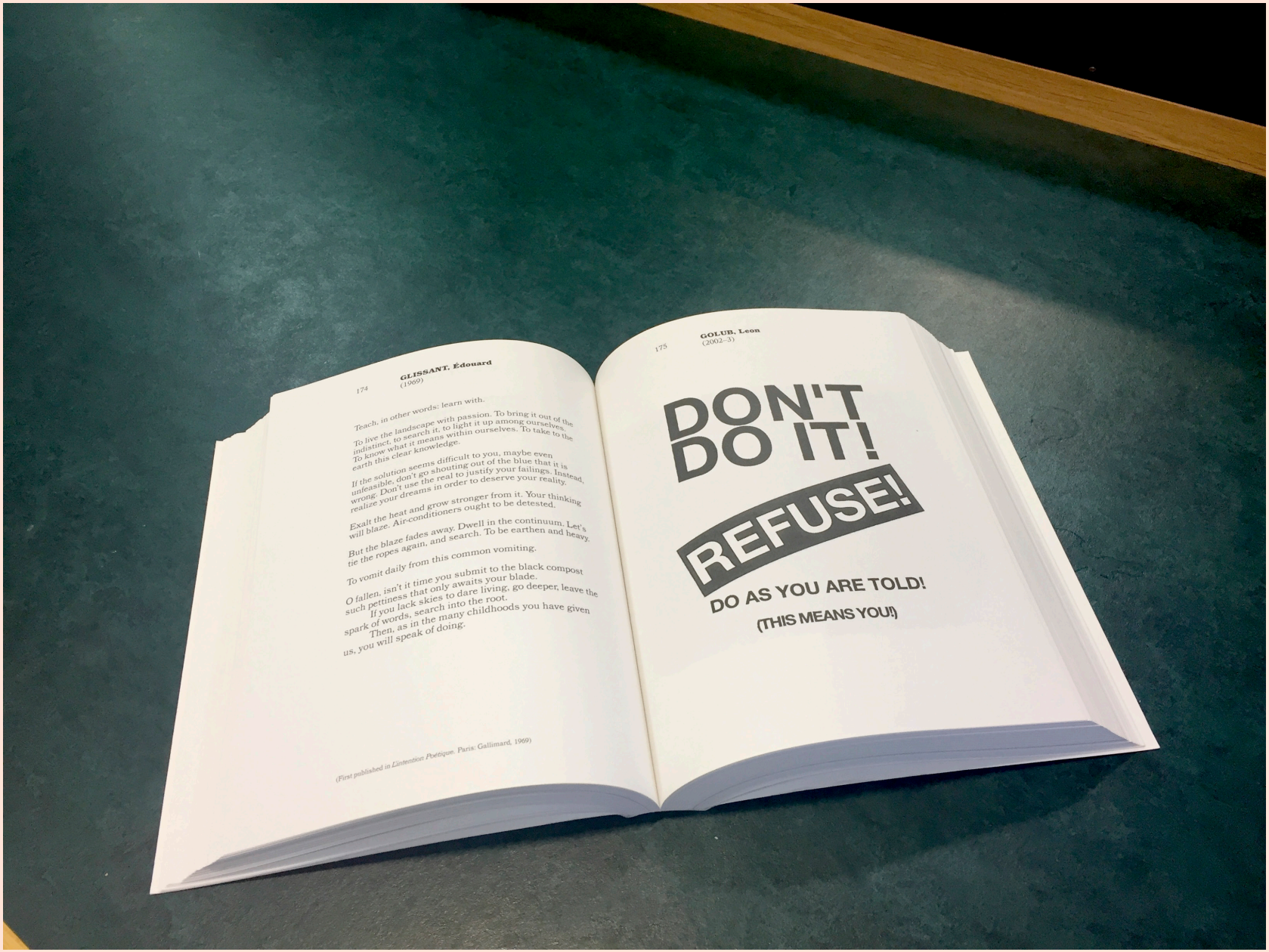

174 **GLISSANT, Édouard**
(1969)

Teach, in other words: learn with.

To live the landscape with passion. To bring it out of the indistinct, to search it, to light it up among ourselves. To know what it means within ourselves. To take to the earth this clear knowledge.

If the solution seems difficult to you, maybe even unfeasible, don't go shouting out of the blue that it is wrong. Don't use the real to justify your failings. Instead, realize your dreams in order to deserve your reality.

Exalt the heat and grow stronger from it. Your thinking will blaze. Air-conditioners ought to be detested.

But the blaze fades away. Dwell in the continuum. Let's tie the ropes again, and search. To be earthen and heavy.

To vomit daily from this common vomiting.

O fallen, isn't it time you submit to the black compost such pettiness that only awaits your blade.

If you lack skies to dare living, go deeper, leave the spark of words, search into the root.

Then, as in the many childhoods you have given us, you will speak of doing.

(First published in *Lintention Poétique*. Paris: Gallimard, 1969)

175 **GOLUB, Leon**
(2002–3)

DON'T DO IT!

REFUSE!

DO AS YOU ARE TOLD!

(THIS MEANS YOU!)

Care

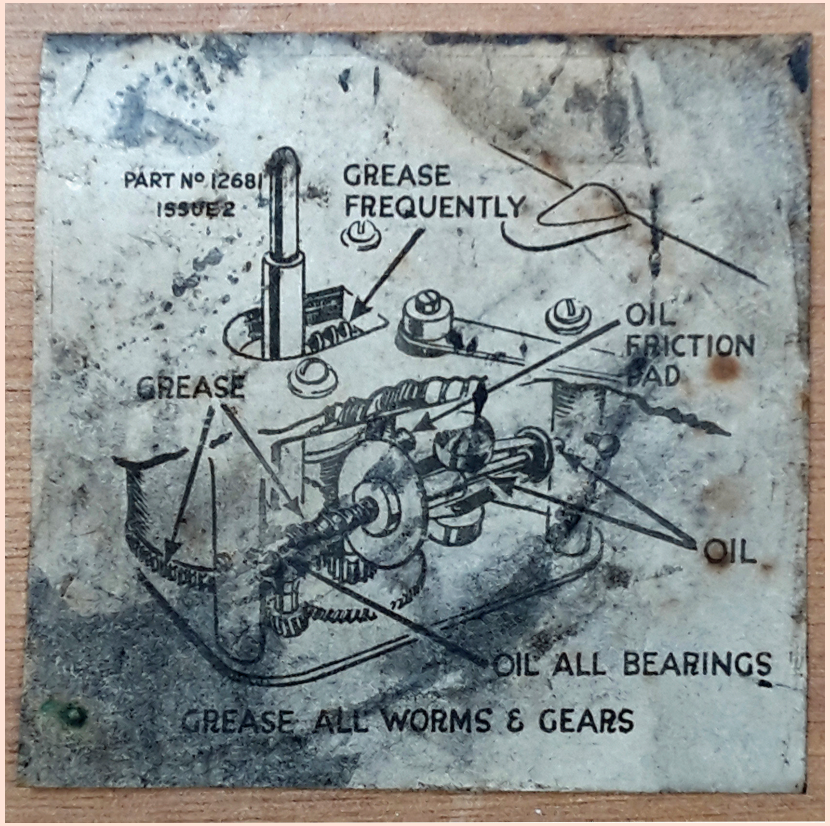

A label found in a 1930s gramophone
Simon Butler

Care

Take a car journey. See who can make a sweet last the longest in their mouth. Hold it in your cheek or stick it to the roof of your mouth. Pay it great attention or try to ignore it. Do anything to protect it from melting.

A game we played as children

Care

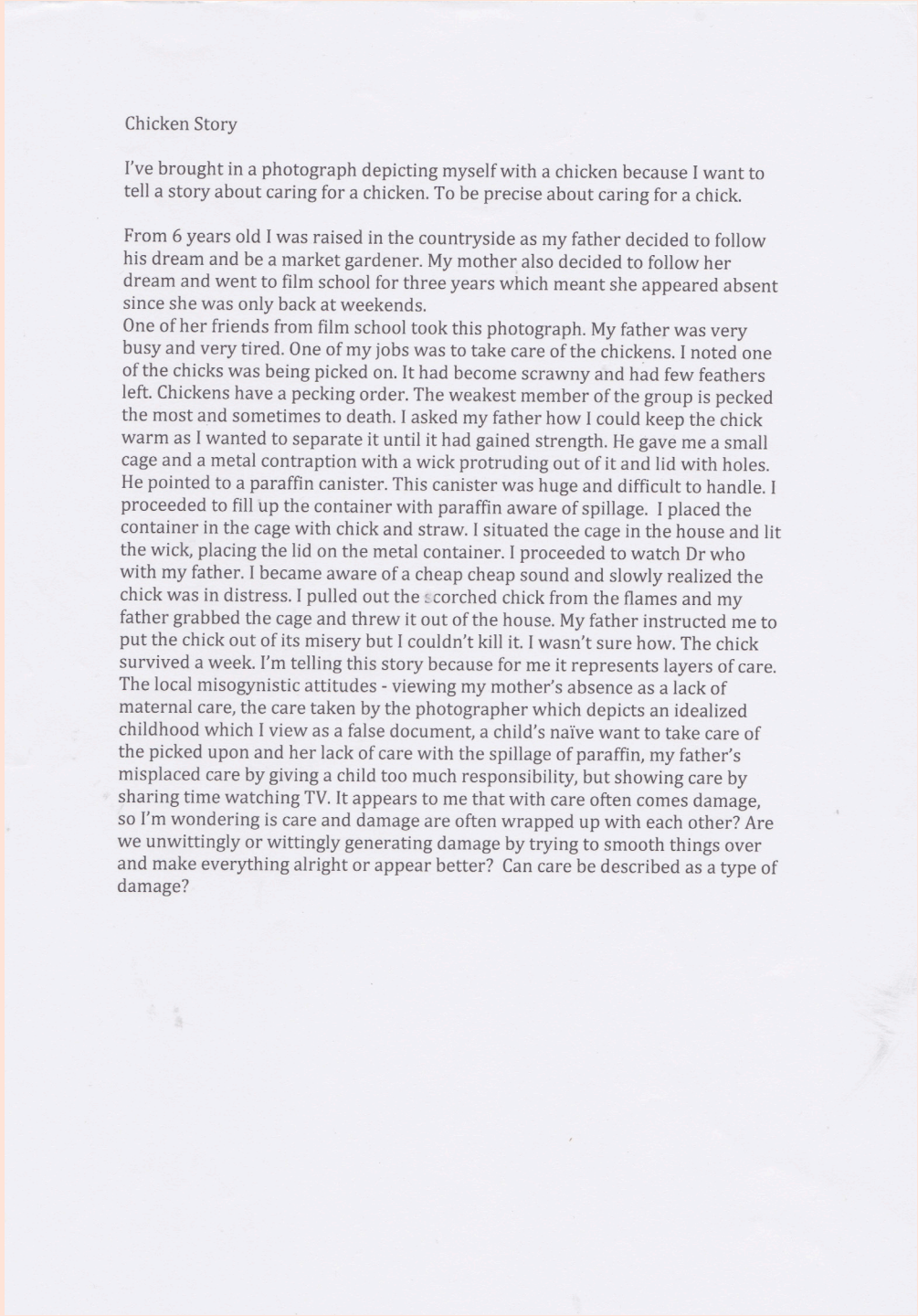

Chicken Story

I've brought in a photograph depicting myself with a chicken because I want to tell a story about caring for a chicken. To be precise about caring for a chick.

From 6 years old I was raised in the countryside as my father decided to follow his dream and be a market gardener. My mother also decided to follow her dream and went to film school for three years which meant she appeared absent since she was only back at weekends.
One of her friends from film school took this photograph. My father was very busy and very tired. One of my jobs was to take care of the chickens. I noted one of the chicks was being picked on. It had become scrawny and had few feathers left. Chickens have a pecking order. The weakest member of the group is pecked the most and sometimes to death. I asked my father how I could keep the chick warm as I wanted to separate it until it had gained strength. He gave me a small cage and a metal contraption with a wick protruding out of it and lid with holes. He pointed to a paraffin canister. This canister was huge and difficult to handle. I proceeded to fill up the container with paraffin aware of spillage. I placed the container in the cage with chick and straw. I situated the cage in the house and lit the wick, placing the lid on the metal container. I proceeded to watch Dr who with my father. I became aware of a cheap cheap sound and slowly realized the chick was in distress. I pulled out the scorched chick from the flames and my father grabbed the cage and threw it out of the house. My father instructed me to put the chick out of its misery but I couldn't kill it. I wasn't sure how. The chick survived a week. I'm telling this story because for me it represents layers of care. The local misogynistic attitudes - viewing my mother's absence as a lack of maternal care, the care taken by the photographer which depicts an idealized childhood which I view as a false document, a child's naïve want to take care of the picked upon and her lack of care with the spillage of paraffin, my father's misplaced care by giving a child too much responsibility, but showing care by sharing time watching TV. It appears to me that with care often comes damage, so I'm wondering is care and damage are often wrapped up with each other? Are we unwittingly or wittingly generating damage by trying to smooth things over and make everything alright or appear better? Can care be described as a type of damage?

Claire Makhlouf Carter
Workshop: Curious about Care, 2013
Ruskin School of Art



Care

Filling the System

Caution
Hold your nerve.

Tools and equipment:

Scissors
Flat headed screwdriver
Cloth
12’ x 9’ Polythene dust sheets x 2
10 x 10 litres cans of emulsion paint (corresponding to the walls that the work is installed on)
Bucket
Paint mixing paddle
Cordless drill
Access to water

Filling the System

09.46 25 Mar:
Maintain the pragmatic stance of the manual instructions.
Take the bonnet off.
Include (not just) the physical steps but the progress of thought that takes place during the act of making.
Edit out explanation.
Let the work, work.

3.0 Fail to cut the tubes inserted into each painting.
Leave each one long enough to touch the inside bottom edge.
Paint cannot flow into the paintings because the pressure of the paint it is up against, is so great. Increase the flow rate on the pump until the jubilee clip that holds the braided hose in place bursts. Watch as paint sprays up the walls and around the space.

3.0 Is painting privileged?
Does it help the work if it is talked about through a particular genre such as painting?
Does this exclude other important strands such as pedagogy?
It is paint, stretcher and canvas.
But it also includes labour relations, spillages, crates, instructions, a pump, tank and pipe system.
This work is often talked about through painting.

16.11 25 Mar:
Is this thinking making?
The words are material.

3.0 Any lack of care in the preparation process is exposed as the paintings fill.

3.0 Cut the lengths of clear plastic tubing for each painting so that only 30mm of pipe inserts inside each one (Drawing 3.0). Check that the gate valves on the supply pipes above the paintings are in the OFF position with the screw heads perfectly horizontal.

Caution
Is painting privileged?

Ensure that the flow rate on the pump is set to 0.4RPM indicated on the LCD screen. Check the flow direction arrow on the screen is showing as anticlockwise. Press start on the pump keypad. Open the valve on the supply pipe of a single painting to the vertical position. Hold the clear plastic tube in place to ensure the flow of paint runs directly inside the canvas pocket. Watch the painting fill. Check for leaks and wait.

Caution
Pay attention. The painting determines the wait time.

With a flat clean hand touch the front surface of the canvas. Know how far the paint has reached by feeling where the material has bulged and protruded. Look inside the painting to see the paint level rise.

Caution
As the paintings fill fine hairline cracks appear on the front surface.

As the paint reaches the top of the pocket turn the screw head on the gate valve back to horizontal.

Open the valve again slightly and slowly to control the final flow of paint into the pocket as it fills right to the brim. Do not let any paint run over the front edge. When the painting is totally full inspect every side, check it is stable on the wall and there are no signs of dripping paint from the bottom edge. Pay specific attention to the folds on the corners. Repeat this process for all four paintings. Fill one at a time. At regular intervals return to and check each painting for flaws.

Caution
The paintings fill at a slow pace. There is no sense of relief when one is full. The next one too calls out for attention.

3.1 Plug the pump in to the mains electricity supply and switch the power on. Use the up and down arrows on the keypad to set the flow rate to 0.4RPM. Look for the small arrow on the pump's LCD screen that indicates the direction of flow the pump is operating in. Press shift and (4) on the control panel to change the direction of the flow to clockwise. Check all of the gate valves above each painting are closed with the screw heads horizontal. Open the valve between the tank and the pump so that the handle is parallel to the body of the valve. Press start on the pump. Press and hold down the start button to lock the settings on the pump, notice a small padlock symbol appear on the LCD screen. Watch the pump head start to turn and the pipe from the tank to the pump rise and fall with each rotation of the pump. Wait for the network of pipes to fill. Listen carefully to the paint move around the system.

Track the paint's progress through carefully listening to the noise it makes in the pipes. Pay close attention to the sound of the paint as it drops from the horizontal supply pipe down to the roll of pipe on the floor. Wait for the paint to flow back to the tank out of the main supply pipe. Stay at all times with the system. Carefully inspect each compression joint on the network for leaks. Wipe away any paint drips that leak from a joint, check that the leaking compression joint neck is locked and the pipe fully inserted into the collar.

3.2 Close the valve between the tank and the pump by pulling the yellow hand perpendicular to the main body of the valve. Cover the area around the storage tank with a polythene dust sheet. Open 1 x 10 litre can of paint, keep the lid. Carefully pour half of the can of paint into the bucket. Prevent any drips of paint falling from the can by wiping the edge quickly after the pour. Dilute the paint in the bucket with an equal amount of cold water. Attach the paint mixing paddle into the drill chuck and tighten. Submerge the paddle fully in the paint and water mixture in the bucket and press the speed control trigger on the drill slowly.

Caution
Do not remove the paint mixing paddle from the fluid while the drill is in action.

Watch as the paint and water mix together. Mix gently until the mixture is the consistency of single cream. Add more water if necessary. Release the drill trigger. Remove the paddle from the liquid. Lay the

Filling the System

3.0 There is nothing to see into.
There is something to see into.
The canvas forms a pocket.
The painting fills.

Look inside.

3.0 Painting 4 leaks.
As the painting fills up, paint leaks from the underside.
Stop the process of filling.
Watch the pace of the leaking paint slow and stop.
Notice the thickening paint in the pores of the canvas form a scab, a seal.
As if the painting is healing itself.
Fill the painting again.

09.22 27 Mar:
Seek reassurance.

3.1 Do not leave the system as it settles.

3.1 Forget to engage the rollers on the pump. Switch the pump on and wait. Speed up the flow rate when no paint circulates through the system. Speed up the flow rate to its maximum speed. Watch the pump increasingly vibrate.
Feel anxious about the robustness of the pipe connections around the pump and tank.

Wait.

Turn the pump off.
Open the pump head.
Engage the rollers.
Turn the pump on.
Slow down the flow.

3.1 Retelling: Testing the limits.

drill down on the polythene sheet. Pour the mixture of paint and water into the storage tank. Pour slowly to reduce the risk of splashes. Wipe any splashes away quickly before they dry. Maintain a clean line of paint in the tank at all times. Pour the remaining 5 litres of emulsion paint in the open can into the bucket and repeat the diluting and mixing process. Wash out any residual paint left in the paint can with water and pour this mixture into the tank. Fit the lid onto the empty can and store away out of sight. Open the next can of paint and repeat the whole process. Fill the tank up to 150mm from the top edge. As the paint level increases it is more important to ensure a visibly clean line of paint in the tank. Remove any signs of splashes or smears.

Caution
Painting cannot be ignored.

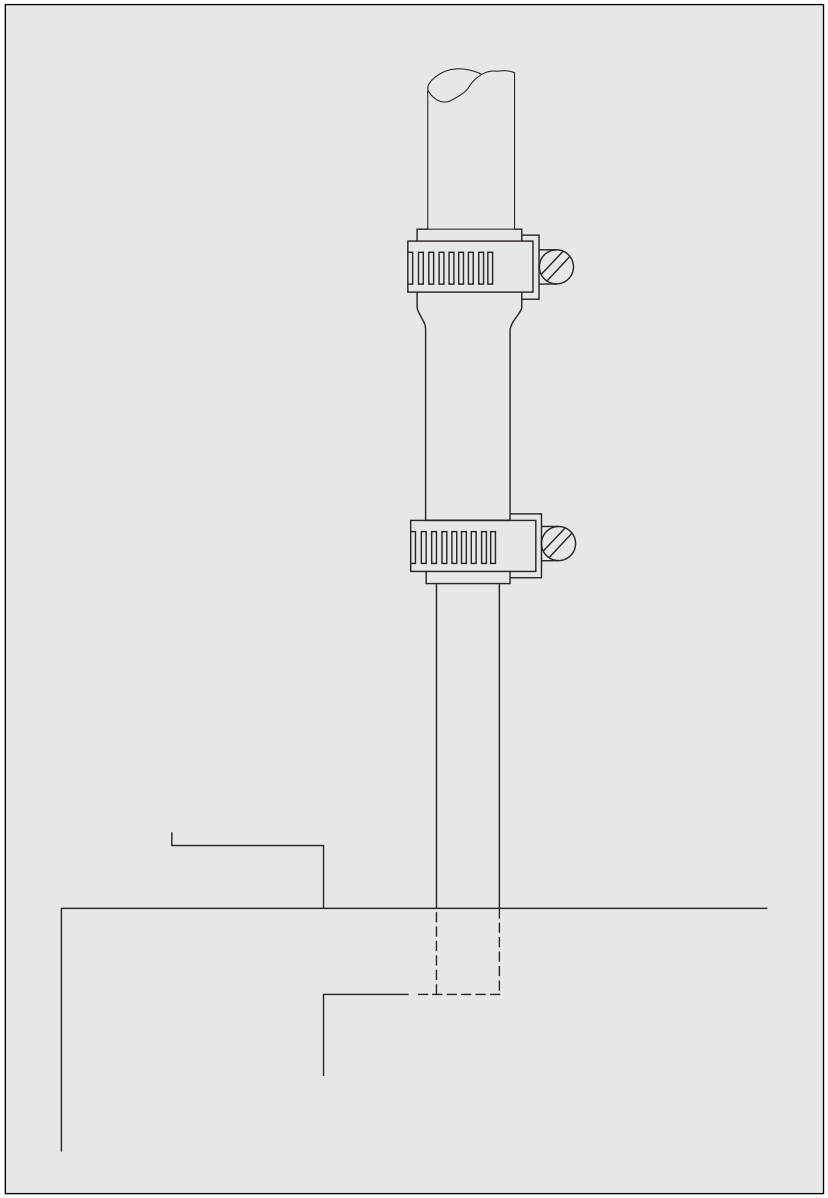

Drawing: 3.0

Filling the System

A 1000mm x 1000mm panel was constructed and filled with paint to test the limits of the canvas skin system. The belly of the painting protruded 400mm from the wall. The painting held 200 litres of paint. The process of emptying took 48 hrs.

3.2 Retelling: Frank Stella in What You See Is What You See: Donald Judd and Frank Stella.

‘I tried to keep the paint as good as it was in the can’. (FS, 1966)

3.2 Just ignore Frank Stella.

3.2 This is not about the end of painting.

Retelling: Nigel Cooke’s The Ambivalence of the Undead, or the Nature of Painting’s Essence. (2013)

3.2 The space fills with the smell of emulsion.

3.2 Mix some of the paint by hand. Submerge an uncovered arm fully into the tank of paint.

3.2 Remove the paint mixing paddle from the fluid while the drill is in action.

3.2 Tread paint through the space off the sole of a shoe.

10.06 2 Apr:
Imagine the worst.

3.2 Tide lines on the tank record the changing paint levels in the system.

08.24 13 Apr:
Retelling: The photograph of the technician (my dad) with his back to the camera as he looks into one of the filling paintings.

Filling the System

Filling the System

Dependent

Dependent



A Thousand Machine
Gerauld Raunig

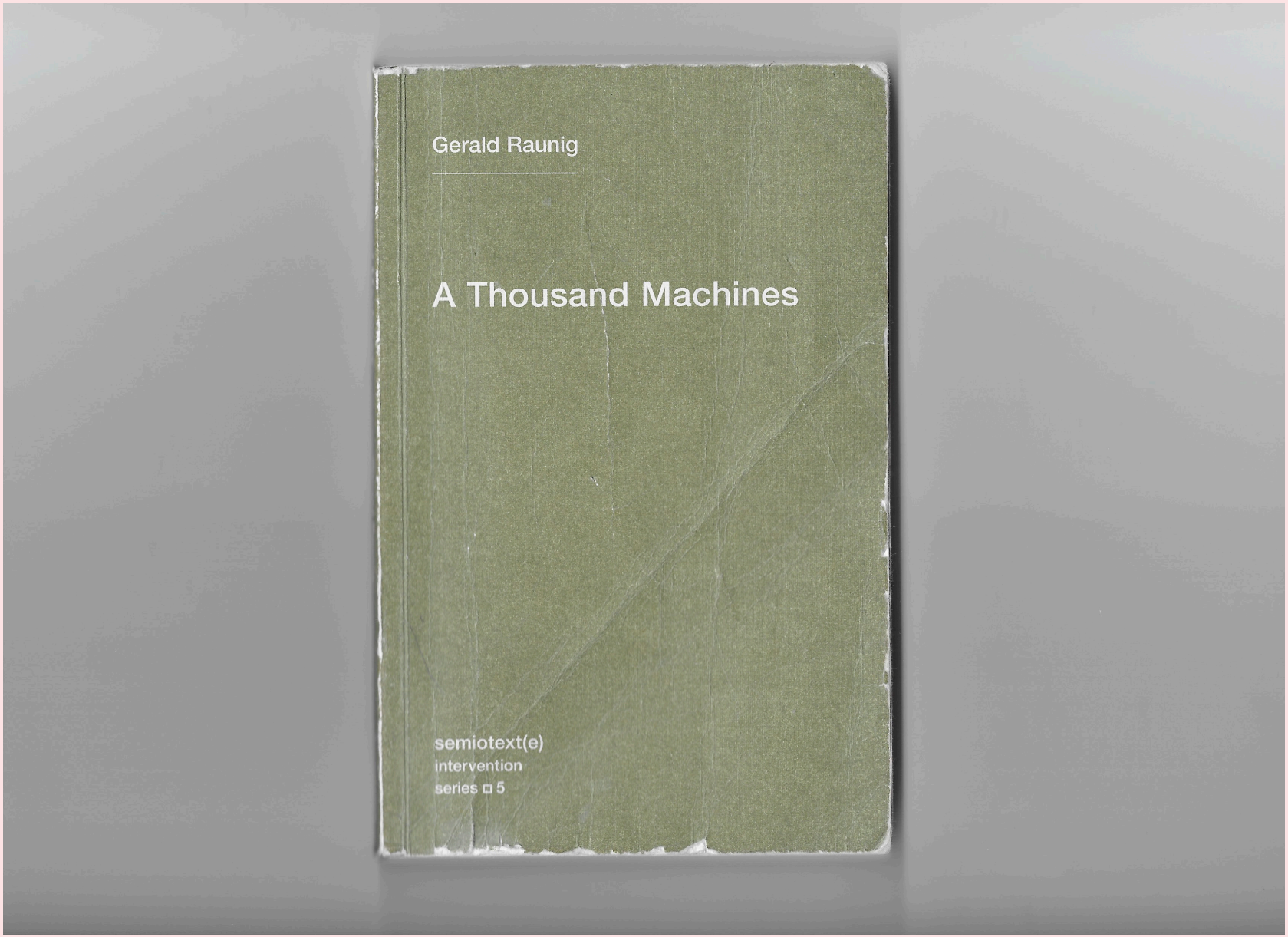
Gerald Raunig
A Thousand Machines
semiotext(e)
intervention
series □ 5

Dependent

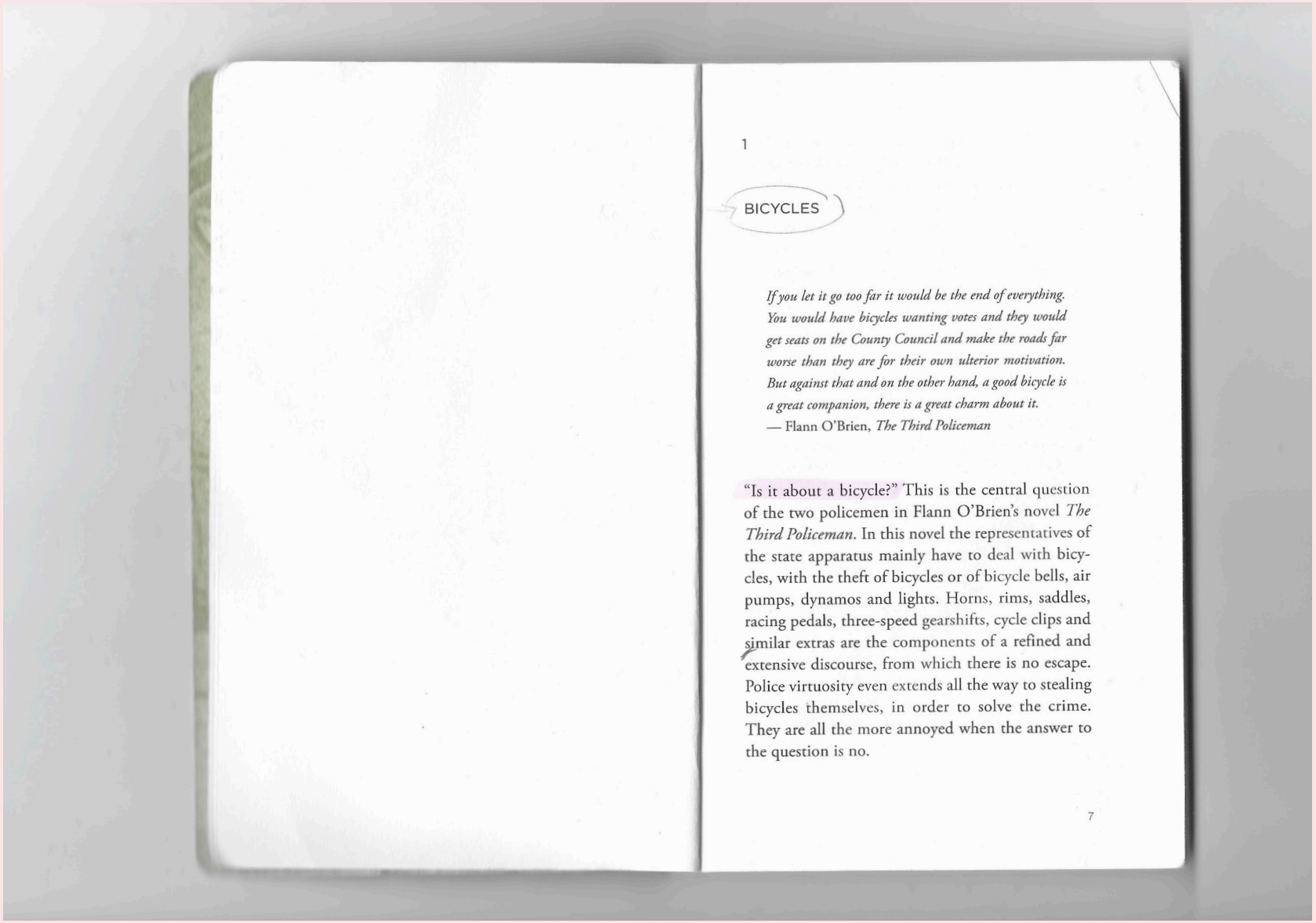

1

BICYCLES

If you let it go too far it would be the end of everything. You would have bicycles wanting votes and they would get seats on the County Council and make the roads far worse than they are for their own ulterior motivation. But against that and on the other hand, a good bicycle is a great companion, there is a great charm about it.
— Flann O'Brien, *The Third Policeman*

"Is it about a bicycle?" This is the central question of the two policemen in Flann O'Brien's novel *The Third Policeman*. In this novel the representatives of the state apparatus mainly have to deal with bicycles, with the theft of bicycles or of bicycle bells, air pumps, dynamos and lights. Horns, rims, saddles, racing pedals, three-speed gearshifts, cycle clips and similar extras are the components of a refined and extensive discourse, from which there is no escape. Police virtuosity even extends all the way to stealing bicycles themselves, in order to solve the crime. They are all the more annoyed when the answer to the question is no.

7

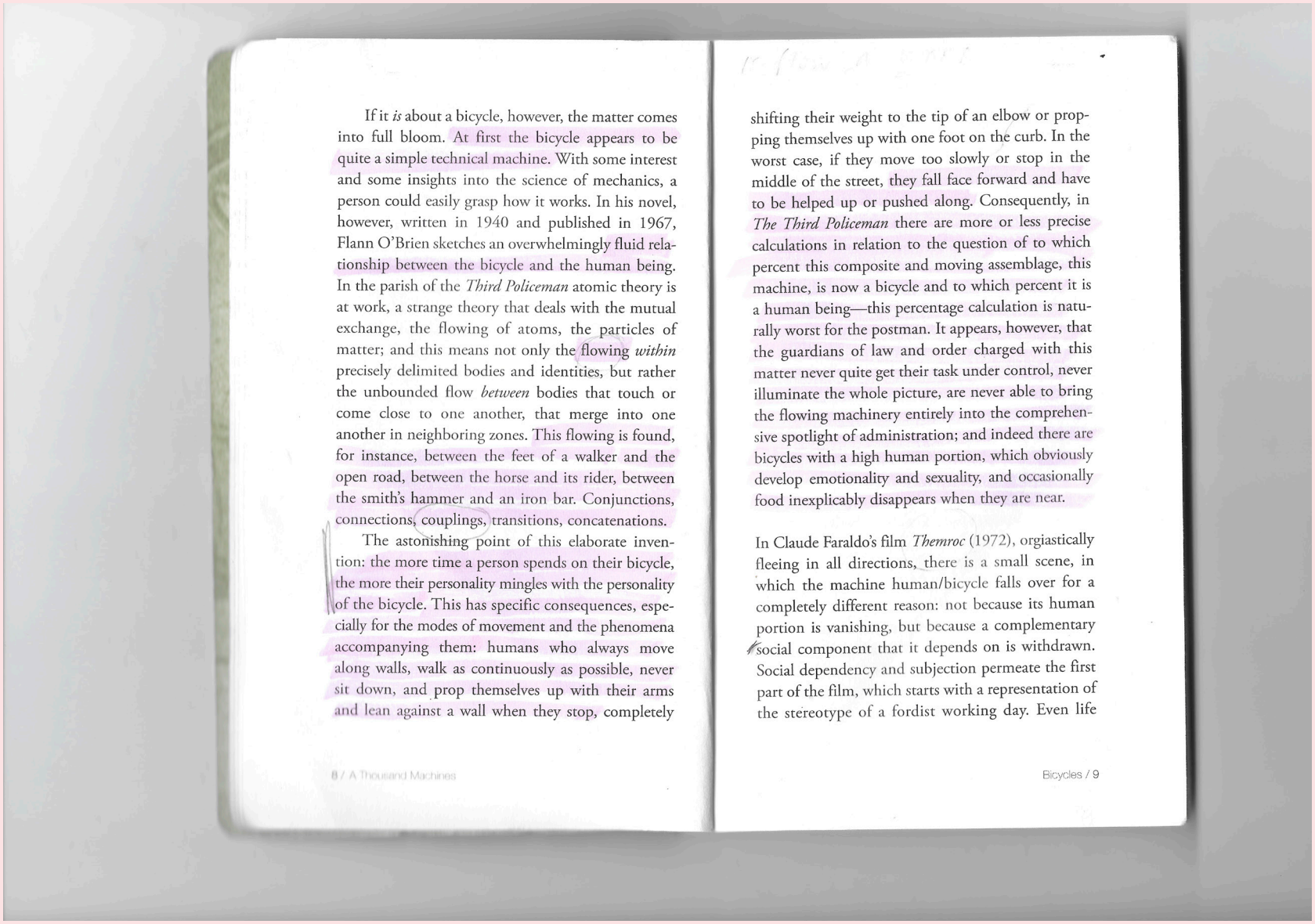

If it *is* about a bicycle, however, the matter comes into full bloom. At first the bicycle appears to be quite a simple technical machine. With some interest and some insights into the science of mechanics, a person could easily grasp how it works. In his novel, however, written in 1940 and published in 1967, Flann O'Brien sketches an overwhelmingly fluid relationship between the bicycle and the human being. In the parish of the *Third Policeman* atomic theory is at work, a strange theory that deals with the mutual exchange, the flowing of atoms, the particles of matter; and this means not only the flowing *within* precisely delimited bodies and identities, but rather the unbounded flow *between* bodies that touch or come close to one another, that merge into one another in neighboring zones. This flowing is found, for instance, between the feet of a walker and the open road, between the horse and its rider, between the smith's hammer and an iron bar. Conjunctions, connections, couplings, transitions, concatenations.

The astonishing point of this elaborate invention: the more time a person spends on their bicycle, the more their personality mingles with the personality of the bicycle. This has specific consequences, especially for the modes of movement and the phenomena accompanying them: humans who always move along walls, walk as continuously as possible, never sit down, and prop themselves up with their arms and lean against a wall when they stop, completely

shifting their weight to the tip of an elbow or propping themselves up with one foot on the curb. In the worst case, if they move too slowly or stop in the middle of the street, they fall face forward and have to be helped up or pushed along. Consequently, in *The Third Policeman* there are more or less precise calculations in relation to the question of to which percent this composite and moving assemblage, this machine, is now a bicycle and to which percent it is a human being—this percentage calculation is naturally worst for the postman. It appears, however, that the guardians of law and order charged with this matter never quite get their task under control, never illuminate the whole picture, are never able to bring the flowing machinery entirely into the comprehensive spotlight of administration; and indeed there are bicycles with a high human portion, which obviously develop emotionality and sexuality, and occasionally food inexplicably disappears when they are near.

In Claude Faraldo's film *Themroc* (1972), orgiastically fleeing in all directions, there is a small scene, in which the machine human/bicycle falls over for a completely different reason: not because its human portion is vanishing, but because a complementary social component that it depends on is withdrawn. Social dependency and subjection permeate the first part of the film, which starts with a representation of the stereotype of a fordist working day. Even life

Dependent

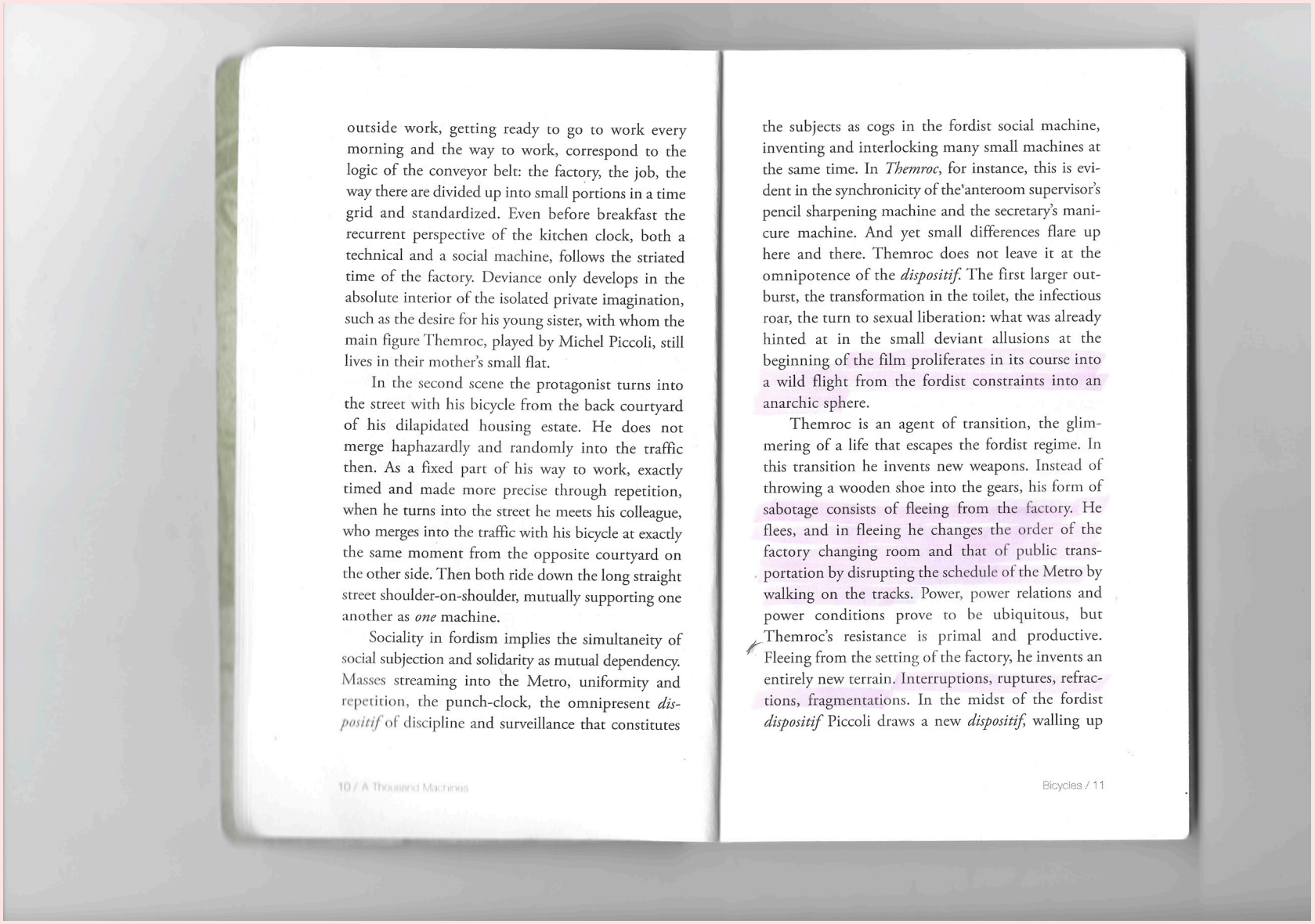

outside work, getting ready to go to work every morning and the way to work, correspond to the logic of the conveyor belt: the factory, the job, the way there are divided up into small portions in a time grid and standardized. Even before breakfast the recurrent perspective of the kitchen clock, both a technical and a social machine, follows the striated time of the factory. Deviance only develops in the absolute interior of the isolated private imagination, such as the desire for his young sister, with whom the main figure Themroc, played by Michel Piccoli, still lives in their mother's small flat.

In the second scene the protagonist turns into the street with his bicycle from the back courtyard of his dilapidated housing estate. He does not merge haphazardly and randomly into the traffic then. As a fixed part of his way to work, exactly timed and made more precise through repetition, when he turns into the street he meets his colleague, who merges into the traffic with his bicycle at exactly the same moment from the opposite courtyard on the other side. Then both ride down the long straight street shoulder-on-shoulder, mutually supporting one another as *one* machine.

Sociality in fordism implies the simultaneity of social subjection and solidarity as mutual dependency. Masses streaming into the Metro, uniformity and repetition, the punch-clock, the omnipresent *dispositif* of discipline and surveillance that constitutes

the subjects as cogs in the fordist social machine, inventing and interlocking many small machines at the same time. In *Themroc*, for instance, this is evident in the synchronicity of the anteroom supervisor's pencil sharpening machine and the secretary's manicure machine. And yet small differences flare up here and there. Themroc does not leave it at the omnipotence of the *dispositif*. The first larger outburst, the transformation in the toilet, the infectious roar, the turn to sexual liberation: what was already hinted at in the small deviant allusions at the beginning of the film proliferates in its course into a wild flight from the fordist constraints into an anarchic sphere.

Themroc is an agent of transition, the glimmering of a life that escapes the fordist regime. In this transition he invents new weapons. Instead of throwing a wooden shoe into the gears, his form of sabotage consists of fleeing from the factory. He flees, and in fleeing he changes the order of the factory changing room and that of public transportation by disrupting the schedule of the Metro by walking on the tracks. Power, power relations and power conditions prove to be ubiquitous, but Themroc's resistance is primal and productive. Fleeing from the setting of the factory, he invents an entirely new terrain. Interruptions, ruptures, refractions, fragmentations. In the midst of the fordist *dispositif* Piccoli draws a new *dispositif*, walling up

the door to his room, tearing down the outside wall with a sledgehammer, tossing the furniture into the courtyard and beginning a wild new life.

The roaring, the smashing and the animalistic groaning—there is not a single word in a familiar language in the film—prove to be infectious. The attacks from the state apparatus seeking to reestablish order with manifold and yet simplistic means (persuasion, threats of the use of weapons, laughing gas, walling up) are repelled in laughter. In this setting, finally two of the policemen are roasted on a spit and eaten. And while Themroc/Piccoli attempts to live a different life inside his dwelling opened up to the outside and in new, free relationships, the next morning his colleague outside on the street experiences the withdrawal of the complementary social component: accustomed to the daily ritual of mutually supporting and being supported, as he turns into the street from the courtyard he overlooks the new situation—and abruptly falls over with his bicycle. This machine of social subjection, the synchrony of dependency and solidarity, no longer exists. The next morning the colleague has mounted training wheels on his bicycle.

In 1946 Luigi Bartolini published his novel *Ladri di Biciclette*. Shortly thereafter Vittorio de Sica transformed the material into a classic of Italian neo-realism, played by amateur actors, shot directly in the streets of Rome. *Bicycle Thieves* was released as

a film in 1948. Bartolini had originally agreed to the filming, but then vehemently protested against de Sica's radical treatment. Although the script also varies the subject of the book in some places, the crucial turn from the book to the film emerges in the turn of the subject position: whereas the first-person narrator of the book, a bourgeois poet, who masterfully, distantly and moralizingly examines the psychology, philosophy and economy of the thieves of Rome as an autonomous artist-subject, the worker Antonio, protagonist of the neo-realist film, is "subject" in the contrary sense: he is *subjected* and exposed to the coercions of rough everyday life. For the hero of the book, the bicycle theft is his reason to begin a calm, planned, almost luxurious search; tracking down the bicycle or the thief and even the theft itself are staged as a gracious sport, even as art. For the anti-hero of the film, it is completely different: for him this turns into a manic, panicked movement, haphazard and driven, dependent on contingency and fortune-telling. Whereas the cycle of theft and re-aquisition in the anarchic geography of Rome moves the poet in the book to own two bicycles for security, Antonio, the protagonist in the film, is only able to keep his hands on his bicycle for a brief period of time: in the beginning of the film narration, in the midst of the unemployment and bitter poverty of the immediate post-war era, he gets a job hanging up posters, but only under the condition that he has a

Doing Wall Drawings
Sol Lewitt, 1971

The artists conceives and plans the wall drawing. It is realized by draftsmen, (the artist can act as his own draftsman.) The plan (written, spoken or a drawing) is interpreted by the draftsman. There are decisions which the draftsman makes, within the plan, as part of the plan. Each individual being unique, given the same instructions would carry them out differently. He would understand them differently.

The artist must allow various interpretations of his plan. The draftsman perceives the artist's plan, then reorders it to his own experience and understanding. The draftsman's contributions are unforeseen by the artist, even if he, the artist, is the draftsman. Even if the same draftsman followed the same plan twice, there would be two different works of art. No one can do the same thing twice.

First published under the title,
Doing Wall Drawings in Art Now,
vol. 3, no 2, New York, June 1971

The artist and the draftsman become collaborators in making the art. Each person draws a line differently and each person understands words differently. Neither lines nor words are ideas, they are the means by which ideas are conveyed.

The wall drawing is the artist's art, as long as the plan is not violated. If it is, then the draftsman becomes the artist and the drawing would be his work of art. But art that is a parody of the original concept. The draftsman may make errors in following the plan without compromising the plan. All wall drawings contain errors, they are part of the work.

The plan exists as an idea but needs to be put into its optimum form. Ideas of wall drawings alone are contradictions of the idea of wall drawings. The explicit plan should accompany the finished wall drawing. They are of equal importance.

Allington, Edward (2002)
Dream Machines, Frieze, April, Issue 66

This page and opposite courtesy: Houldsworth Fine Art, London



• **Natasha Kidd** *Painting Machine II* 1999 Mixed media Dimensions variable

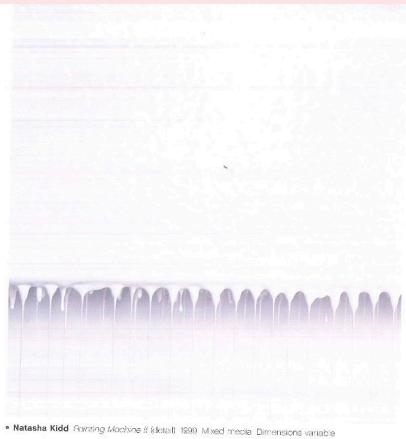

• **Natasha Kidd** *Painting Machine II (detail)* 1999 Mixed media Dimensions variable

Edward Allington on robot art

machines

The museum guard had his eye on me as I stood watching a machine made out of an old desk and all sorts of other junk. The machine was signing the name 'Tim Hawkinson' over and over again.

When it finished each signature, a crude blade would automatically cut the name off from the strip of paper, and it would drop to the pile on the floor. Why shouldn't I steal one? Machines can't write signatures that mean anything, make art or write literature, can they? I should have just picked one up and walked out of the door, without giving it a second thought. If you are going to steal anything, thinking about what it all means is not the way to do it. Stealing involves a rather specialized form of stupidity, which I'd almost attained, but which eluded me at the last moment. So I left the gallery without a

Dependent

signature and very irritated. But of course I thought about it later anyway.

I started by thinking about other writing and painting machines: Akira Kanayama's *Work* (1957), Jean Tinguely's 'Méta-matics' series (1959), Harold Cohen's computer-controlled drawing robot (1978), Angela Bulloch's *Betarville* (1994) and *Mudslinger* (1995), Mark Hosking's 'Word Turn' series (1996) and his current 'Auto Roto Font Project', an art-making machine for which he has made a patent application. Then there is Natasha Kidd, whose work is a continual investigation of the painting machine. No doubt there are many more. Where did this all begin? I knew that, as always, Marcel Duchamp would be part of the story, but I couldn't make the link. Then I remembered the photograph and the women – one real, one fictional and one a machine.

Let's start with the real one. She is there in the corner of the photograph, looking happy and glamorous. She is Iris Clert, owner of one of the most innovative postwar art galleries in Paris. Next to her are two men in white shirts. One is Jean Tinguely and the other is Marcel Duchamp. Every photograph of Duchamp seems to be of significance now but in July 1959, when this photograph was taken, he was almost a forgotten man in Europe.[1] However, with the publication of Robert Lebel's comprehensive and well-illustrated book *Sur Marcel Duchamp*, published in both English and French that same year, it looked as if he was finally going to receive his dues.

One of the key figures in the development of Kinetic art, Duchamp's *Rotative Demi-sphere (optique de precision)* (1925) as well as *Nude Descending a Staircase* (1912) had been exhibited in April 1955 in a show called 'Le Mouvement' at Galerie Denise René in Paris. The exhibition also included works by Jakov Agam, Pol Bury, Alexander Calder, Jesus Rafael Soto, Pernille Jacobsen, Victor Vasarely and Tinguely, with Duchamp and Calder appearing in the historical section of the exhibition. Tinguely was represented by two drawing machines, which, although overlooked at the time, were the prototypes for the 'Méta-matics' that would bring him fame and success four years later when they were exhibited at Iris Clert. Some 5000 people saw that show, including Jean Arp, Isamu Noguchi, Man Ray and Tristan Tzara, who proclaimed that the epilogue to painting had now begun.[2] The 'Méta-matics' produced over 4000 drawings, and this photograph captures the moment when one of these thousands is being 'made' by Duchamp, who is operating one of the machines.

She can write in French and English and draw landscapes and ships. Known as the Philadelphia Doll, she was made by the Maillardet family before 1812 and is now in The Franklin Institute, Philadelphia.

The 'Méta-matics' are drawing machines – not drawing aids, but crude robots that make their own drawings. According to the art critic Pontus Hulten – a close friend of Tinguely and who helped him name the machines – the 'Méta-matics' are incapable of failure and of producing two identical drawings. Perhaps their significance has grown with Duchamp's reputation, and perhaps his reputation has now obscured the real importance of Tinguely's machines; they are the first real manifestation of a myth that still has a strong hold on contemporary practice: the ultimate removal of skill, of talent, of genius from the production of art. A machine that is an artist.

What a year 1959 must have been for Tinguely, who saw in his machines '... an instrument that allows me to be poetic. If one respects the machine, if one goes along with it, one could perhaps produce a cheerful machine, and by "cheerful" I mean "free"; that would be a wonderful alternative.'[3] He produced the huge *Méta-matic No. 17* (1959) for the Paris Biennale; driven by a small petrol engine, it drew quickly and included a mechanized pair of scissors that cut the drawings apart as the paper unrolled. Tinguely also submitted a patent application for a drawing machine and rounded off the year with the end of the 'Méta-matics' series at the ICA in London, where *Cyclo-matic* (1959), a huge machine propelled by two racing cyclists, spewed an orgasmic stream of drawings over the ecstatic audience.

So there is Iris Clert in the corner of the photograph from 1959, a cigarette in her left hand. But in my mind there is another woman present, a ghost who arrived one night at the Théâtre Antoine in Paris during the summer of 1912, when Marcel Duchamp, Guillaume Apollinaire and the Picabias attended Raymond Roussel's unintentionally outrageous play *Impressions d'Afrique*. Her name was Louise Montalescot, and in the play, which also includes, among a multitude of extraordinary devices, a zither played by earthworms, she is the owner of a painting machine. Duchamp acknowledged the influence that Roussel had upon him, and went as far as to suggest to J. J. Sweeney, that 'It was Roussel who, fundamentally, was responsible for my glass'.[4] If Roussel was essentially responsible for the *Large Glass* (1915–23), the question has to



Courtesy: Museum Jean Tinguely, Basel

• **Iris Clert, Jean Tinguely and Marcel Duchamp during the opening of Tinguely's 'Méta-matics' exhibition** Galerie Iris Clert, Paris 1959



Courtesy: ©Isermann/CORBIS

H. O. L. Schell, chief designer at The Franklin Institute, examining the Philadelphia Doll 1932

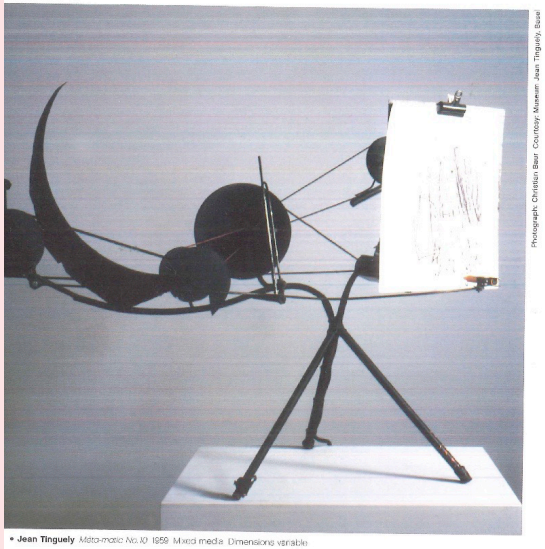

Photograph: Christian Baur. Courtesy: Museum Jean Tinguely, Basel

• **Jean Tinguely** *Méta-matic No.10* 1959. Mixed media. Dimensions variable

Tinguely's machines are the first real manifestation of a myth that still has a strong hold on contemporary practice: the ultimate removal of skill, talent and genius from the production of art.

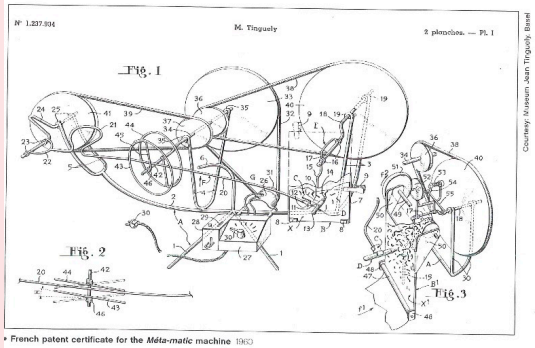

Courtesy: Museum Jean Tinguely, Basel

• French patent certificate for the *Méta-matic* machine 1960

be, how? As with most questions of influence, the answer is highly debatable, and will no doubt provide fuel for generations of Duchamp scholars. Put simply, *Impressions d'Afrique* is credited with introducing notions of chance and a hermetic use of word play as a generative system within Duchamp's work. And the accepted notion is that the appearance of Montalescot's painting machine marks the moment that the idea of a machine that can paint enters the mythology of Modern art. In fact, her painting machine is rather disappointing when it appears in chapter 19 of Roussel's original novel.[5] I first learned of its existence through reading about Duchamp and had always imagined that, like many of the fantastic devices enumerated in the work of Roussel, it would be described in ludicrous detail, but no: 'Particularly fanatical in her devotion to chemistry, she keenly pursued, during the long night watches, an important discovery long germinating in her mind. The problem was to generate by purely photographic means, a motor force sufficiently precise to guide a pencil or brush with certainty.'[7] Its place within Roussel's strange narrative is linked to the search for an elusive essential oil. The machine would seem to be a kind of camera obscura which, thanks to the mysterious oil, will convert light into a means of making realistic paintings.

It was due to the fact that Roussel's character was female that the third woman came to mind. She is an automaton who can write in French and English and can draw landscapes and ships. Known as the Philadelphia Doll, she was made by the Maillardet family before 1812 and is now in The Franklin Institute in Philadelphia – the town that now holds the main collection of Marcel Duchamp's works, including the *Large Glass* and *Etant donnés* (1946–66).[8] There were other automata that could draw and write, such as Pierre Jaquet-Droz's scribe of 1770 and draughtsman of 1772; like the Philadelphia Doll they are of French origin. The notion of a writing, drawing machine – a robot artist – has a much longer history, and the real point is not so much its invention as the means by which it makes its transition into Modernist thought. Perhaps Roussel's influence on Duchamp is just such a point of transition, as might be Franz Kafka's *Penal Colony* (1919), which introduces the notion of a machine that kills by writing.[9] Although from completely divergent literary forms, what Roussel's and Kafka's machines have in common is the paranoia of persecution, which was to become a hallmark of the Modern era.

It is this undercurrent of paranoid thought which inhabits Hawkinson's *Signature* (1993) and Hosking's 'Word Turn' (1996), a series of seemingly benign mechanisms which literally turn sentences in upon themselves in a manner reminiscent of Kafka's 'apparatus'; they would have to destroyed to be read. Likewise, Bulloch's *Belaville* (1994), a bench-activated painting machine (you sit on the bench and the machine begins to paint) and Kidd's painting machines seem to threaten the meditative silence of the act of painting and the genre of the monochrome. Philip K. Dick, the author of *Do Androids Dream of Electric Sheep* (1968), a delirious reverie on automata upon which Ridley Scott's *Blade Runner* (1982) was based, once said: 'The ultimate in paranoia is not when everyone is against you but when everything is against you'.[10] The paranoid continuum is that of the human, as opposed to the inhuman. The question asked is not, 'does this machine replicate human emotion?' but 'does this machine replicate an action and if I can still empathize with it, am I still human?'

Tinguely's extraordinary 'Méta-matics' of 1959 produced works visually similar to the automatic drawing and Tachiste painting of his time, but because they were made by a machine they were stripped of psychological significance. Which is why when Tinguely was invited to show *Méta-matic No. 17* at the 1959 Paris Biennale the other artists insisted it was exhibited outside, away from their work. The philosophical question raised by a machine that can make art, as Tinguely's machines did – *No. 17* was bought by the Moderna Museet in Stockholm in 1965, using the profits from the drawings done by *Méta-Moritz* (*Méta-matic No. 8*) of 1959, which was already in the collection – is how do you know you are human when a machine usurps an activity that you previously thought of inherently human? Not only do painting machines threaten what it means to be human; they force us to reconsider time on their terms. A machine is designed to exist in the continuous present and as soon as it ceases to function it is redundant. It is either working or not working. This is a problem that is literal and fundamental, with all the implications that those two words hold. Time stops at the point when the machine first begins production. Hawkinson's *Signature* stopped in 1993. The continuous present is a complex but very important problem. If we allow the past and, by implication, the future to be rendered invalid, then our paranoia will be justified, for in the continuous present there is no failure. Which is why Pontus Hulten could insist that the 'Méta-matics' could not produce failed drawings: if we defy the machine, we – not it – are at fault.

In 'An Anecdoted Typography of Chance', a dialogue between Robert Filliou and Daniel Spoerri, both good friends of Tinguely, two machines made by outsider artists are described. One constructed by the Swiss artist Anton Muller is referred to by Tinguely himself. Muller invented a machine to cut the fungus from grapevines, but did not patent the device and as a consequence became insane. He subsequently continued to make machines within a Bern asylum, lubricating them by pissing and masturbating on to the mechanisms. Filliou and Spoerri claim Muller's contraptions, and a further machine made by a certain 'Plato', were the real precursors to Tinguely's work. 'Plato' had a perpetual motion machine which he would demonstrate in the market place under the sign 'Machine For Sale' while turning a handle on its side: '... he would say "this is the perpetual motion machine". But when there were farmers around, you know, they would look at the thing and say: "that's not perpetual motion, it keeps stopping. The thing doesn't even work." Well then, Plato would say: that's why the man is for sale too.'[12]

The 'Méta-matics' have antecedents in Muller and 'Plato' too, for in that frantic year of 1959 Tinguely patented a drawing machine, and it came with a man. Tinguely lent it to his friends, who used it to busk around the cafés in Paris. As long as the machine comes with a man or a woman, we are going to be all right. In the case of that wonderful photograph of Iris Clert's lipstick smile, the man who comes with the machine is Marcel Duchamp. As for me I just wish I'd picked up one of those signatures. But unlike a machine I don't exist in the continuous present, and the next time I see it I'm going to steal one.

1. Pontus Hulten, *The Man and his Work: Museum Jean Tinguely, the Collection*, Museum Jean Tinguely, Benteli, Basel and Bern, 1996. p. 34.
2. Ibid., p. 44.
3. Ibid., p. 45.
4. Pierre Cabanne, *Dialogues with Marcel Duchamp*, trans. Ron Padgett, Thames & Hudson, London,1971, pp. 33–4.
5. Quoted in Georges Raillard, *Les Fils de la Vierge: Marcel Duchamp, abécédaire*, Centre National d'Art et de Culture Georges Pompidou, Musée National d'Art Moderne, Paris, 1977, p. 185.
6. *Impressions d'Afrique* was published as a novel in 1910. Roussel adapted it for the stage and opened the play at his own expense at the Théâtre Fatima in September 1911, but closed it owing to the death of his mother. The play reopened in May of 1912, which is when Duchamp saw it.
7. Raymond Roussel, *Impressions of Africa: A Novel*, trans. Rayner Heppenstall, Calder & Boyars Ltd, London 1983, p. 282.
8. Jasia Reichardt, *Robots: Fact, Fiction + Prediction*, Thames & Hudson, London, 1978, p. 15.
9. Kafka gave a public reading of this story in 1916. Franz Kafka, *Metamorphosis and Other Stories, Works Published during Kafka's Lifetime*, trans. Malcolm Pasley, Penguin Books, London, 1992, note xi.
10. Scott Bukatman, *Blade Runner*, BFI, London 1997, p. 67.
11. Daniel Spoerri, 'An Anecdoted Typography of Chance', *Fluxus, Today and Yesterday*, Art & Design, London, 1993, p. 73.



• **Mark Hosking** *Word Turn* 1996. Mixed media. Dimensions variable

Girl Chewing Gum
John Smith, 1976
Original script for the voiceover

Directions –

Slowly move the trailer to the left…. and I want the little girl to run across, now. Hold that trailer there……. Now move the trailer off.
Right – now I want the old man with white hair and glasses to cross the road – come on, quickly….. look this way, now walk off to the left. OK, fine.

Now let's have the man in the peaked cap…. put the cigarette in your mouth……good…….. and I want the two girls to come in from the right talking to each other.

Now I want the Jamaican family, father first – look in front of you……now the mother and the two boys……and I want the smaller boy to point to the right, and now cast a glance behind him. Now I want the bus ticket to blow across the pavement.

Fine – now I want the girl with the bag under her arm to walk to the right. Now let's have the man rubbing his eye……good.
Right. Now I want everything to sink slowly down as the five boys come by…….hold it……

and I want the clock to move jerkily towards me….stop.

Now I want the long hand to move at the rate of one revolution every hour, and the short hand to move at the rate of one revolution every twelve hours…..fine.

Now two pigeons fly across, and everything comes up again until the girl chewing gum walks across from the left.

OK. Now – the van, the woman, and the boy… the man with the bag of chips, the car roof, the whole car, the old man, the car, the car and the boy, the boy, the motorcyclist and the lorry. Now when the woman at the window looks in this direction, I want everything to move a bit further away.

Right – let's have the man in the white boiler suit coming in from the right……stop at the lamp-post and fold your arms….now look around you……..

walk back to the left again, and look left and right as you cross the road…..

Now I want the man reading exchange and mart to come in from the right.

Now a man comes by and bites his nails, two pigeons fly past from right to left and two boys run past from left to right…..the woman at the window looks this way and then goes on talking. In a second I want four boys to come from the left, and I want one of them to look this way and flap his arms up and down. I'd like the boys to remain in more or less the same position, while everything else moves to the left and goes away a bit at the same time…….
Got that?…..OK…….go.

Lift up your arm – now bring it down.
Now I want the man with the turban and briefcase to come in from the right, and now the van marked 'University of London, Senate House, London WC1'.

In the cinema queue, I want to see a boy and his mother. The boy will be about eight years old, and his mother about thirty-two. They will both have collar-length hair, his dark and hers fair – she will be wearing a suedette coat with a white imitation fur collar. They will be talking to each other and looking around them. The boy will look at his watch and yawn, then look at it again and say something to his mother about the time.
Now I want the man coming in from the left in

the grey peaked cap to put on his glasses. The three children eating chips, the French woman, the window-cleaner in his van, the greengrocer, the pigeon, the red jaguar, the taxi, the van, the man, the negro with the briefcase and the newspaper, the woman firmly gripping the hands of her two young sons. They stop, and now they cross the road.

The man in the grey peaked cap takes off his glasses again and puts them in his breast pocket. The man with the walking stick is going home. The dentist continues on his way to the bank, and the two naughty boys appear from behind Steele's and cautiously cross the road. Steele's the plate glass manufacturers is situated in an area with a high immigrant population, predominantly West Indians and Greeks. Outside the building, above its main doors, is a board advertising vacancies at the firm. Until recently, I thought that jobs were advertised on the board in two languages – English and Greek. However, a few weeks ago, I studied the board carefully, and realised that I had been wrong. Each vacancy has its own slat in the board – the words (glass-cutters, bevellers, bench fitters etc.) are cut out of these slats, which are made of perspex. When a vacancy no longer exists, the slat advertising it, which has a central pivot at each end, is swivelled around. The words that I had believed to be Greek were in fact upside-

down and back to front English. Steele's also has another interesting feature. Along each wall of the building, there are eight large doors that are kept wide open throughout the year.

I am speaking into a megaphone, which I am pointing at a microphone, on the outskirts of Epping Forest – about ten miles from the building you are looking at. The traffic noise will now fade down. I am standing on the edge of an enormous golf course, and there are trees behind me and to my left. In the distance I can see three golfers. One of them is wearing a blue jumper, and the other two are both wearing red. They are all men. The shortest of the three is standing by a trolley, which is laden with their clubs. The one with the blue jumper, who seems much older than the other two, is looking this way. Now the short one has put a ball on the ground and is taking a club from the trolley. I think he's got a helicopter in his pocket. In a tree about fifteen yards away, I can see a large blackbird with a wingspan of about nine feet. This young man has just robbed the local post office and is attempting to appear inconspicuous. He is trying to remain calm, but his hand is sweating as he grips the butt of the revolver in his raincoat pocket even harder. He is wondering whether the woman at the window would recognise him if she saw him again. The burglar alarm is still ringing.

John Smith, (1976) *Original script for the voiceover to the Girl Chewing Gum* in Erika Balsom (ed.), In focus: The Girl Chewing Gum 1976 by John Smith, Tate Research Publication, 2015, http://www.tate.org.uk/research/publications/in-focus/the-girl-chewing-gum-john-smith/original-voiceover-script, accessed 31 July 2017

The film can be viewed at http://www.tate.org.uk/research/publications/in-focus/the-girl-chewing-gum-john-smith/the-film

Dependent



Chris Burden installing *When Robots Rule: The Two-Minute Airplane Factory* 1999

Creed's art is not ironic, though. Irony looks askance at the literal meanings which it borrows, but whatever drives Creed's art away from the literal sends it straight back again. At no point does the work distance itself from the wish that everything is going to be alright even as it acknowledges that, if the truth be told, it's not. I'm not disputing the possibility that some cleverclogs art lover out there might take for granted that an artist of his quality would not for a minute be fooled by such a crass sentiment. All I want to suggest is that the work is better for the fact that the sentiment survives relatively unmolested. ■

Dave Beech is an artist.

■ Chris Burden

Tate Gallery London March 18 to July 18

Imagine the scene: the colossal Duveen Galleries have been emptied of heavy-duty steel I-beam sculptures, bronzes and marbles. The first gallery houses a most extraordinary machine: its 6m long aluminium framework densely populated with an amazing selection of computer-controlled automata, each whirring and running and blowing in precise patterns as they progressively assemble, from its constituent parts, a delicate balsa and tissue model aeroplane. At the end of the machine a fragile cantilevered runway extends 3m into the central Sackler Octagon. The completed aircraft taxies along and launches itself, rubber-band thrumming, spiralling 20m upwards into the cavernous space, eventually gliding back to earth for its maiden landing. This joyful sight is repeated every two minutes as another fresh plane is born and set free, buzzing itself skyward.

As the aircraft land they are gathered up by gallery attendants and sold cheaply to the public, and so they are dispersed around London and beyond. What we're seeing then is not only an entire factory on display, but a whole economic system too. The planes aren't just made before our eyes; they are commodified and sold. So the installation is a microcosm of our industrialised capitalism: a working diagram of the dominant social and economic systems, made comprehensible through transparency and manageable scale. It's an astonishing project, spectacular, entertaining, intelligent, critical and relevant.

You can picture it now, can't you? A wondrous installation, fascinating and uplifting in equal measures; base materials alchemically transformed into elegant flying machines, enchanting the money out of visitors' pockets. It's a magnificent scene. Just don't rush along to the Tate to see it, because you won't find it there. Sure, that's where the installation is based, and crowds gather about it, but the spectacle will remain less than

EWAN GIBBS Typical Interiors 02 May – 30 May 1999
Maureen Paley Interim Art, 21 Beck Road, London E8 4RE
telephone: 44 171-254 9607 fax: 44 171-254 6445
Open Fridays and Saturdays, 11am – 6pm and by appointment

Barrett, David (1999)
Fear of Not Flying. Art Monthly, May, Issue 226.

enthralling while the machine itself remains non-functioning. Unfortunately, the only little aeroplane to be found at the Tate is in a glass box, and the artist made that one himself, by hand.

The exhibition was due to open on March 2, and as of mid-April it has yet to produce a single aircraft. What beautiful irony then that Frances Morris should begin her essay with the line: 'Chris Burden has always given museums a difficult time'. Which essay is that? Oh, you won't have seen it because it's in the catalogue which, due to a lack of images, hasn't been printed yet (although by the time you read this it should be available).

Morris is right: Burden does give museums a difficult time. Most of his work, in some way, challenges the institutions that he works with. Often he challenges them politically: what are they willing to do, legally, ethically and self-critically? Here, though, the Tate is challenged practically: it is asked to work in areas alien to its usual practice – it's a sort of institutional assault course, a kind of Krypton Factor for major museums. At this rate, the Tate won't be qualifying for the series final.

This may all seem beside the point; if the machine was working we would be talking about model planes and not inept management. But taken in the context of Burden's practice, it's tempting to think that perhaps he knew the installation would spend most of its time not functioning. The work itself, then, is not so much a machine, but a kind of managerial performance art: we watch the Tate squirm as it tries to deal with software programmers and engineers, all while attempting to remain unruffled before thousands of intrigued visitors.

When Robots Rule: The Two-Minute Airplane Factory is ingenious because, if it fails to work, it simply shifts its focus. If the machine was fully functioning, then it would be worth flying half way round the world to witness, as some people have. But even when it's not working it is still worth a visit; as an artwork it is equally successful, it just has different results.

How can we justify this 'institutional critique' view of the piece? Surely if it doesn't work, then it just doesn't work? Well, ever since his student days Burden has been deeply interested in institutional politics: his first ever performance at the University of California – where he imprisoned himself in a tiny student locker for 5 days – seemed less concerned with performing an act of physical endurance than with the institution's reaction to it (which was to call security, and ask them to bring crowbars). There are numerous other stunning, institution-baiting projects to prove it.

Yes, Burden's work is often about demystifying technological processes, as the Tate's press machine insists, but it is always soaked in politics too. And that is what is so great about this project; while the Tate may have thought it had commissioned a relatively safe project – in so far as it doesn't explicitly undermine its authority – the installation's problematising of managerial structures refuses to be suppressed. It is a gorgeous irony, and one that Burden must enjoy at some level, that this joyful, apparently non-critical installation should have tripped the Tate up so spectacularly. ▮

David Barrett is an artist.

■ Bob Law

Kettle's Yard Cambridge March 6 to April 25

Bob Law's small, well chosen and beautifully installed retrospective began chronologically with the 'Field Drawings' of 1959. These also are small and their imagery is schematic with, for instance, outlined signs for a sun or trees aligned around the edge, as in life. Each drawing is precisely dated, which might indicate the progression of a series or a narrative or the recording of some more arcane, private experience. In any case, we should be wary of a too literal reading.

Near the entrance to the exhibition at Kettle's Yard an information sheet introduced Law's work. It equated him with St Ives, in the vicinity of which he lived for a few years in the late 50s; he has, it stated, 'affinities with Alfred Wallis and Roger Hilton'. Read a little further and, yes: 'His work has always had the immediacy and intensity of child-like experience and his most recent sculptures use the simplicity of children's building blocks'. Indeed one of them does consist of building blocks – and another is made of Lego™ and yet another and rather funny one apparently of matchboxes – but Law's ability to make such simple statements – and perhaps even jokes – might indicate his sophistication. I do not recall anyone claiming child-like experience for Mies van der Rohe when he remarked that 'less is more' and Law's work suggests that his thinking is more closely comparable with van der Rohe's than with Wallis as the representative of the more mythic qualities of St Ives. Putting the emphasis on St Ives no doubt owed something to the proximity of Jim Ede's collection but it is also what we seem to do now when we wish to

Sheffield Hallam University
BA (Hons) & MA
FINE ART DEGREE SHOW
Sat 29th May 10am-5pm
Sun 30th May - Tue 1st June
Closed
Wed 2nd - Fri 4th June 9am-8pm
Sat 5th & Sun 6th June 9am-5pm
Psalter Lane, Sheffield, S11 8UZ. Tel : 0114-225-2603

Back Issues
Art Monthly
available from
Art Monthly (Back Issues)
Suite 17, 26 Charing Cross Road
London WC2H 0DG
Tel: 0171 240 0389
Fax: 0171 497 0726
Email: artmonthly@compuserve.com

Dependent



Fitting the Tank & Pump

Fitting the Tank & Pump

Tools and equipment:

22mm grey barrier pipe x 3m straight length
Plastic pipe cutters
Grey Speedfit Equal Straight coupler 22mm
10 x 22mm speedfit pipe inserts
Tape Measure
Pencil
Paper
25 m x 22m roll of barrier pipe
25 Gallon / 114 Litre Cold Water storage tank
Cordless Drill
5.5mm drill bit
22mm talon hinged grey plastic pipe clip
1 x M5 x 30mm Pan-head machine screw
1 x M5 Nut
Watson Marlow Peristaltic Pump 620s
(The pump can be supplied by a request to the manual email contact)
Pozi-drive screwdriver
Flat head screwdriver
Loadsure pipe (supplied with pump)
Loadsure connectors and hose x 2 (supplied with pump)
2 x 16mm to 25mm hose clip
Grey Speedfit Elbow 22mm
Spirit Level
Full bore lever ball valve 22mm
2 x 8” adjustable wrenches
25mm masking tape
29mm hole saw
Half round file
22mm speedfit tank connector grey

Fitting the Tank & Pump

11.24 2 Apr:
Retelling: Tim Ingold's Correspondence - Knowing from the Inside
'It is the job of words - to put things at a distance, to pin them down, to impose a discipline, and to hold an otherwise unruly world to account'. (TI, 2017)

4.3 The rolled barrier pipe is unwieldy and cannot be easily controlled.
Retelling: Tim Ingold's Matter Over Mind, Mind Over Matter

The 25m roll of barrier pipe put up a fight.

This is not hylomorphism at work.

4.3 This 25m pipe roll keeps the audience away from the work it also prevents the paint from seeping beyond its edge.
It acts as a barrier.
Who is the audience?

4.3 Retelling: Elvia Wilke's The Grammar of Work at https://frieze.com/article/grammar-work.
Is this "verbing the noun"?
Who is doing the work?
This is reliant on 8 other people.
What are the implications of this commitment/time/labour/request?

4.6 Use use not utilise.
Use utilise not use.

Retelling: Tim Ingold's Correspondence - Knowing from the Inside.
To use for Ingold is 'to draw it into your habitual (or usual)

Caution
The language needs to be precise. Equivalent to every detail of the system.

4.0 Use the plastic pipe cutters to cut a 300mm section of pipe from the 3m straight length of 22mm grey barrier pipe, ensure the cut is clean and square with no uneven edges. Practice cutting the pipe with the pipe cutters until each cut is straight and even. Unscrew one neck of the equal straight speedfit coupler (Drawing 4.0) and slide the cut end of the pipe into the open fitting. Push firmly until the pipe cannot go any further, feel it fully insert into place.

Barrier Pipe

A plastic water pipe used for domestic water or heating systems. It has a special designed barrier that reinforces the pipe to protect against contaminants and reduce the risk of erosion.

Speedfit Coupler

Push fit or speedfit fittings or couplers are used to provide water tight connection points in plumbing systems. They can be used to connect copper or plastic pipe. The fittings work through a series of spurs inside the fitting that grip the pipe as it is inserted into the cavity.

Caution
Feeling the material is important here.

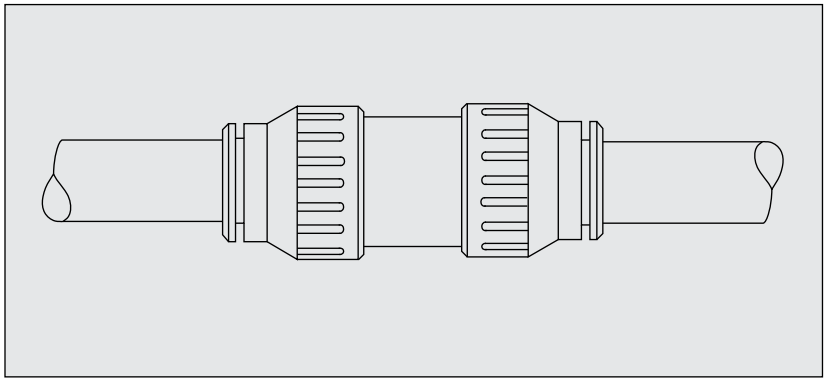

Drawing: 4.0

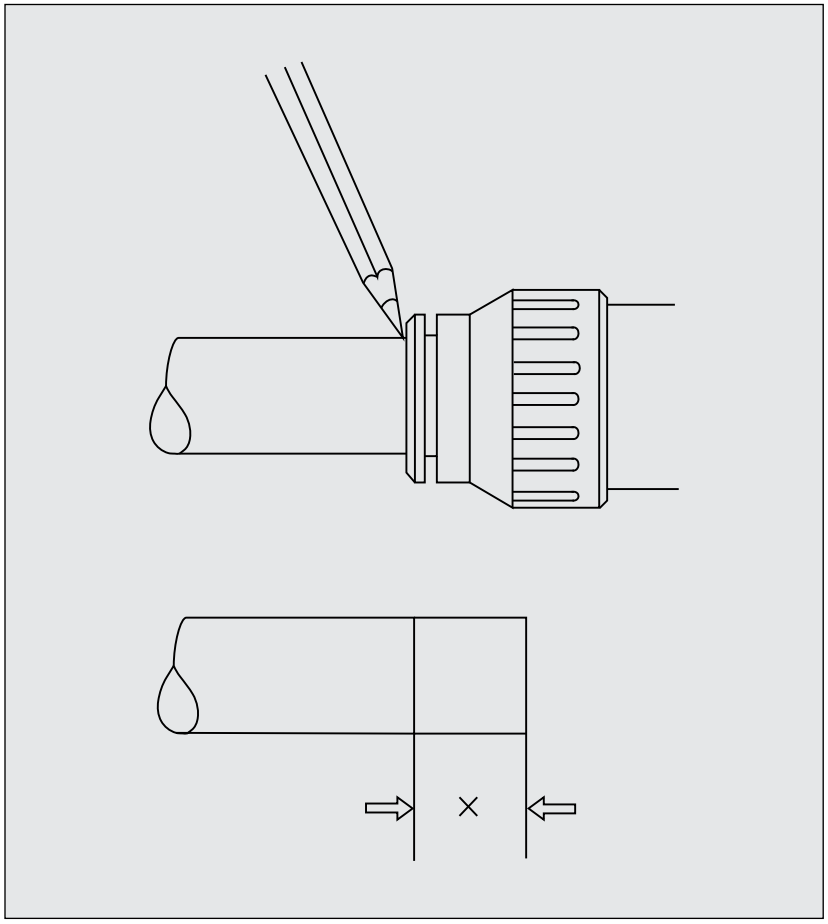

Drawing: 4.1

pattern of activity... working together to joint effect. And conversely, to be used to a thing is to accept it into your life, as part of your custom. Not so, however, with utilisation. For to utilise an object is to turn it to one's benefit while holding it at a remove. It is to deny any affective involvement, or common feeling'. (TI, 2017)

4.6 Get used to the plastic pipe cutters. Use them again and again. Turn them to a benefit while holding them at a remove.

4.6 The pipe cutters are the most frequently used tool in the construction process. Repeatedly re-use the phrase 'use the plastic pipe cutters' to think through Ingold's claim.

4.6 Retelling: The advice of a technician during an install (my dad).

'Measure twice cut once'.

15.55 30 Mar:
Is this ventriloquy?

This is not the voice of the object
This is not it's autobiography
Recalling: http://www.noticer.uk/the-noticer-object-autobiographies/

4.6 Retelling: Pat Thompson's post on the noticer. http://www.noticer.uk

I SEE/ NOT SEE
JULY 23, 2014 PAT THOMSON

Fitting the Tank & Pump

Listen for the end of the pipe hitting the inside ridge of the coupler. Scribe a pencil mark around the circumference of the 22mm pipe where the fitting ends (Drawing 4.1). Using fingertips push the small collar of the joint towards the pipe and pull the pipe back out. Look for the scribed pencil line on the section of pipe that has been removed. Using a tape measure, determine the distance between the end of the pipe and the scribed mark to establish the standard distance barrier pipe inserts into fittings of this kind. Make certain this measurement is accurate. Note down this measurement. Use this standard measurement when fitting all speedfit couplers throughout the entire construction of the pipe system.

Caution
Is the unruly object being pinned down rigorously and disciplined?

4.1 Use the edge of a thumb to unclip the talon hinged pipe clip that holds the right side vertical supply pipe to the wall. Measure up from the floor using a tape measure and cut this vertical pipe so it finishes 250mm up from the floor. Insert a pipe insert into the cut end. Make sure the insert sits flush to the end of the pipe to prevent a fail in the seal.

Caution
Pipe inserts should always be used with plastic pipe. They strength the pipe that inserts into the fitting.

Using a tape measure, measure from the cut edge of the pipe, and mark a pencil line, to indicate the standard distance the pipe should insert into a fitting. Check one neck of the equal straight speedfit coupler is unlocked and push the pipe on the wall into the open end. Insert the pipe until the collar of the joint sits on the scribed pencil line indicating that the pipe is fully in place. Turn the neck of the coupler clockwise to seal (Drawing 4.2).

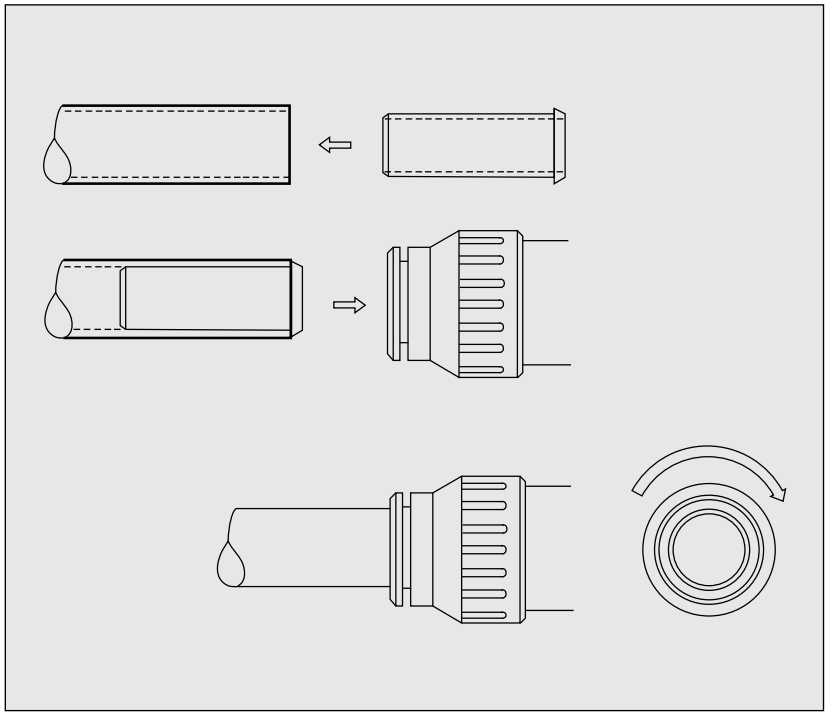

Drawing: 4.2

4.2 Unwrap the 25m coil of barrier pipe from the protective film. Find one end of the coil and pull it towards the straight coupler attached at the wall. Scribe a pencil line on the end of the 25m coil of pipe at the standard distance it should insert into a fitting, fit a pipe insert. Unlock the end of the straight coupler (now attached to the vertical supply pipe on the wall) and push the end of the 25m coil into the fitting until the neck sits against the scribed pencil line. Turn the coupler neck clockwise to lock and seal the coil in place.

4.3 Pull the other end of the 25m coil of barrier pipe across the floor towards the 25 gallon cold water storage tank and elevate this end off the floor so it reaches inside the open top of the tank. There is no need to uncoil all 25m of pipe just what is necessary to reach the tank. Hold the end 100mm inside the open top of the tank against the top right long edge. With a sharp pencil mark the point at which the pipe touches the tank edge to indicate where a talon hinged pipe clip should be positioned that will hold

Fitting the Tank & Pump

‘The art historian James Elkins writes about seeing.
He challenges a number of taken-for-granted ideas about sight and vision. Here are three of his big ideas:

(1) Elkins says that a lot of what we call seeing is actually not-seeing – we screen out much that is actually in our scope of vision, because we are unable to process the sheer amount of available visual information. So as we see, we always simultaneously not-see. We are both sighted and blind at the same time.

(2) Elkins suggests that seeing is not simply what happens in the brain ‘inside ‘ us – it is what happens in between our eyes and objects. And this is not empty space but is actually light. Light joins our eyes and the object we are ‘seeing’. We are not separated from the objects we are looking at but are joined to them by and through light.

(3) Elkins maintains that objects look at us. A knife says pick me up. A cookie says eat me. An unused box reminds us of things we haven’t done. The object can resist being noticed, or invite us to notice it.

This is a challenging idea and Elkins proposes a reason for this:

‘A psychoanalyst might say that we need to believe that vision is a one-way street and that objects are just the evasive recipients of our gaze in order

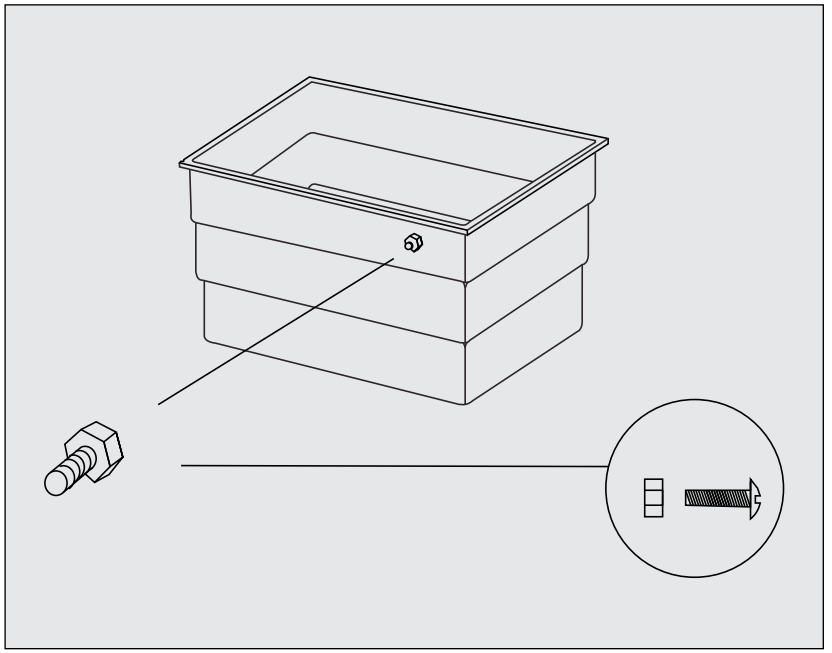

Drawing: 4.3a

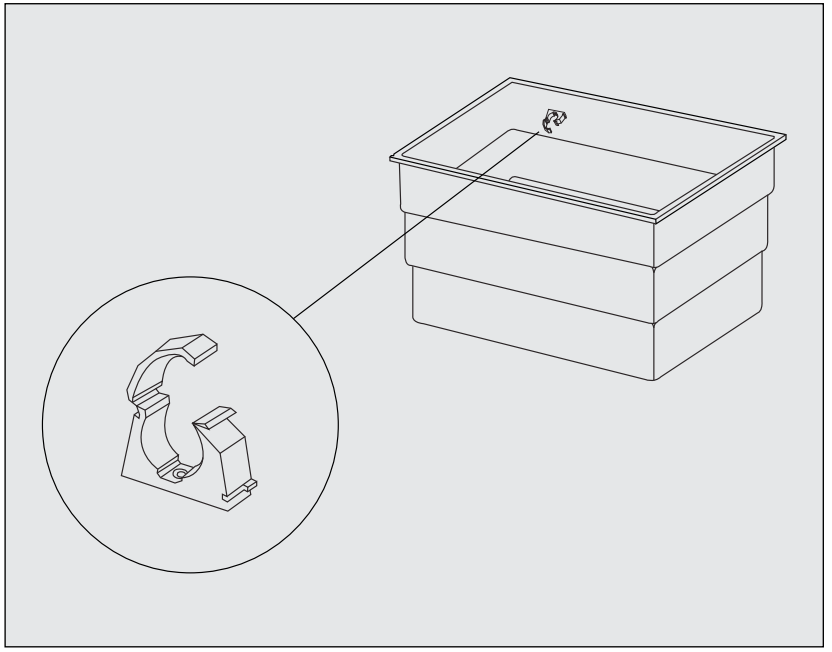

Drawing: 4.3a

it permanently in place. Use a drill and a 5.5mm drill bit to bore a hole in the tank for the clip. Push the drill firmly against the plastic edge of the tank from the inside to make the hole. Press the drill trigger slowly.

Caution
Take care not to slip with the drill or crack the plastic tank.

Push an M5 (30mm) pan-head machine screw through a talon hinged pipe clip and through the hole in the tank, from the inside out. Secure the screw and clip in place with a M5 nut. (Drawing 4.3a and 4.3b) Feed the open end of the 25m coil into the pipe clip and lock the clip shut. Allow a 100mm length of the pipe to protrude through the clip with the open end pointing down into the tank.

Caution
The pipe on the floor should not look positioned just purposeful.

Caution
The rolled pipe is unwieldy and cannot be easily controlled.

4.4 Unpack the Watson Marlow 620s peristaltic pump from its box (Drawing 4.4). Store the packaging out of sight. Keep the loadsure pipe and the two connection hoses close to hand. Position the pump so that inlet and outlet holes on the pump head face towards the main installation wall, and that the top outlet hole of the pump is directly parallel to the vertical supply pipe leading down the wall on the left side of the system. Connect the

to maintain the conviction that we are in control of our vision and ourselves. If I think of the world in the ordinary way I am reassured. Everything is mine to command: if I want to see a movie I go and see it. if I want to look at my cat, I look at her. But this implies something darker: that if I resist the idea that objects look back at me and that I am tangled in a web of seeing, then I am also resisting the possibility that I may not be the autonomous, independent, stable self that I claim I am. I may not be coming to terms with the thought that I need these reciprocal gazes in order to go out and be myself.' Elkins, James (1996) The Object Stares Back'. (PT, 2014)

4.6 Can one sense be talked about as if senses don't contaminate each other? We see and smell and hear, feel, is it a myth that we have 5 senses only and has naming them done violence to experiencing?

4.11 The storage tank is covered in branding and postage stickers.
Remove them.
Regret the decision.
The sticky residue is impossible to get rid of.

4.11 The back plastic fibres from drilling the tank are impossible to remove. They are static. Leave some behind. Notice them float in the paint when the tank is filled. The pump takes them and sucks them through the system.

mains electricity lead from the pump to the nearest power supply.

Peristaltic Pump

A peristaltic pump uses 2 rollers mounted onto a circular motor head and a compressible tube. The tube is squeezed between the rollers on the arc of the circle. When one roller squeezes the tube a seal is formed at the point of contact, as the tube moves around the seal advances and then releases as the roller passes. This squeezing action creates a vacuum that is filled by fluid sucked in through the inlet of the pump. The second roller compresses the tube behind the first and the fluid is expelled through the pump and out through the supply pipe. At the same time, a new vacuum is created as the first roller squeezes the pipe once more, the process repeats whilst the pump is active.

Caution
Avoid using an extension cable to stop excessive cables around the work. Do not cover or tape down the cable.

The cable must sit on the floor. Leave the mains power off. Open the guard door of the pump head using a flat head screwdriver (Drawing 4.5). Disengage the internal rollers by pushing them away from the rotar. Take the single loadsure pipe supplied with the pump and locate one of the D shaped flanges into the bottom inlet port near the guard hinges. Make sure that the flat edge of the D sits flush with the face of the pump. Wrap the tube

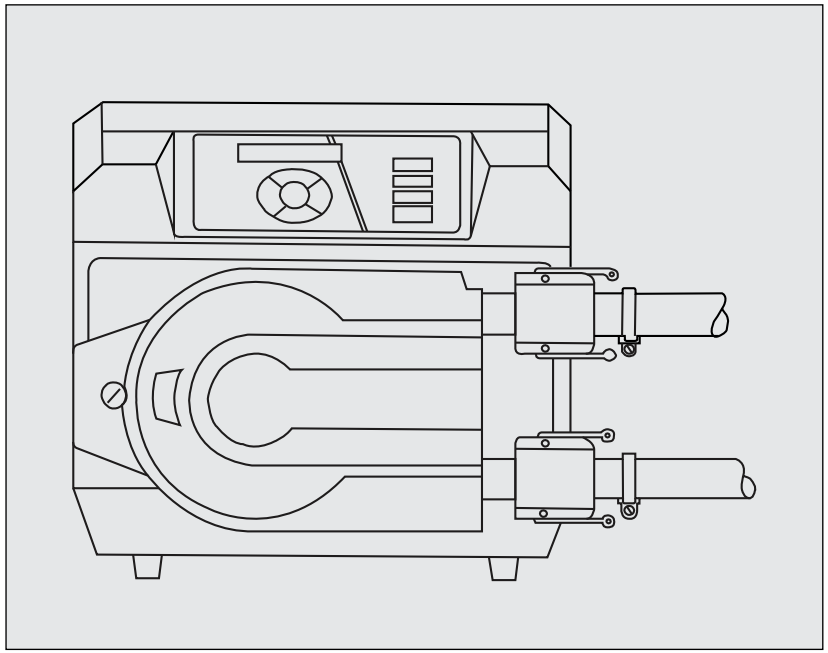

Drawing: 4.4

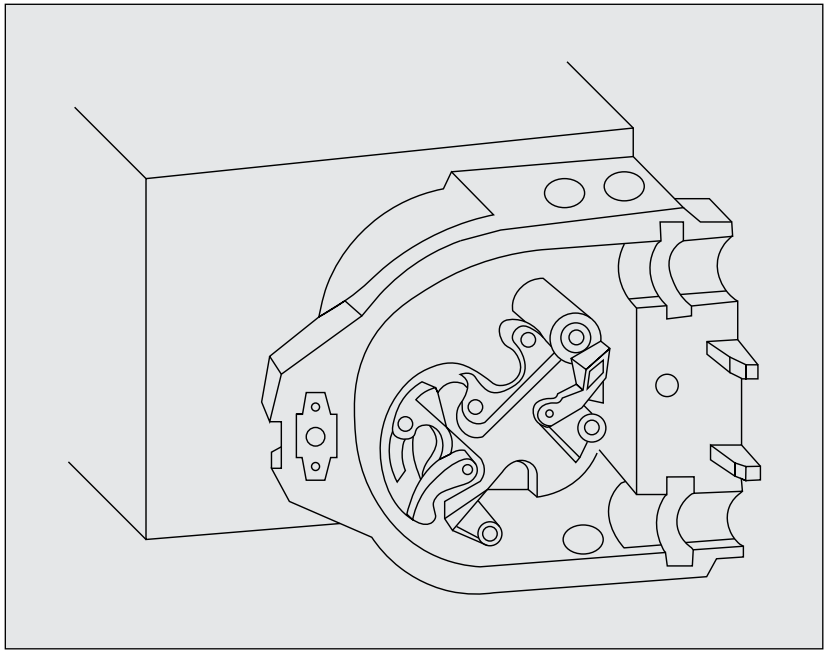

Drawing: 4.5

Fitting the Tank & Pump

Fitting the Tank & Pump

4.11 Retelling: The DIY plumbing website.

‘Use... fingers to check the fitting for leaks while the cistern is filling. If there are any leaks, drain the cistern and tighten the fitting as necessary. Tightening joints with the cistern full is poor practice and could lead to disaster if the cistern ruptures’

element around the internal rotar. Rotate the rotor manually, gradually thread the tubing into place. Fit the second D shape flange into the top outlet of the pump and check it is flush. Once the tubing is in place push the rollers back in until they are fully engaged. Manually turn the rotor to watch the action of the pump and understand its mechanism. Close the guard door until it catches shut.

4.5 Attach the two pieces of reinforced hose with connecting elements to the loadsure pipe from the pump by slotting the black connectors over the two elements protruding from the pump head. Pull the silver cam levers closed. (Drawing 4.6)

4.6 Use the plastic pipe cutters to cut a 600mm length of 22mm barrier pipe from the 3m straight length. Push one end of this length of pipe into the reinforced hose that runs from the top black connecting element on the pump - persevere - this connection must be tight to prevent paint leaking from the connection. Lubricate the inside of the hose with saliva. Repeatedly run the inside of a thumb against the internal edge of the hose to loosen it. Insert the 22mm pipe inside the hose by 25mm, use pressure to turn and push the 22mm pipe to manoeuvre it inside. Open a 16mm to 25mm hose clip with the flat head screwdriver to the maximum it will open without the mechanism becoming released from the screw thread holding it together. Thread the clip over the end of the 22mm pipe and onto the edge of the hose by 10mm. Fasten the clip in place using the screwdriver. Tighten the hose clip to seal any

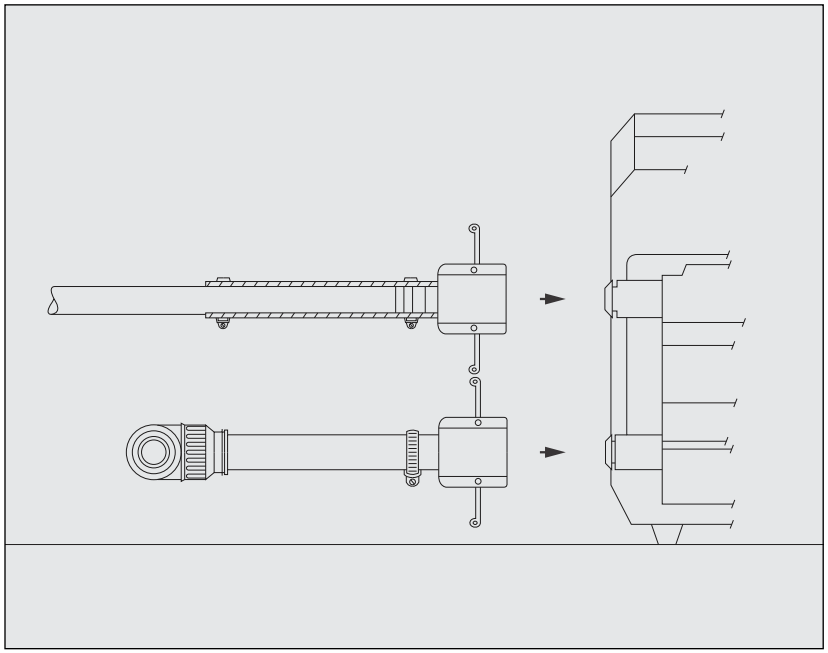

Drawing: 4.6

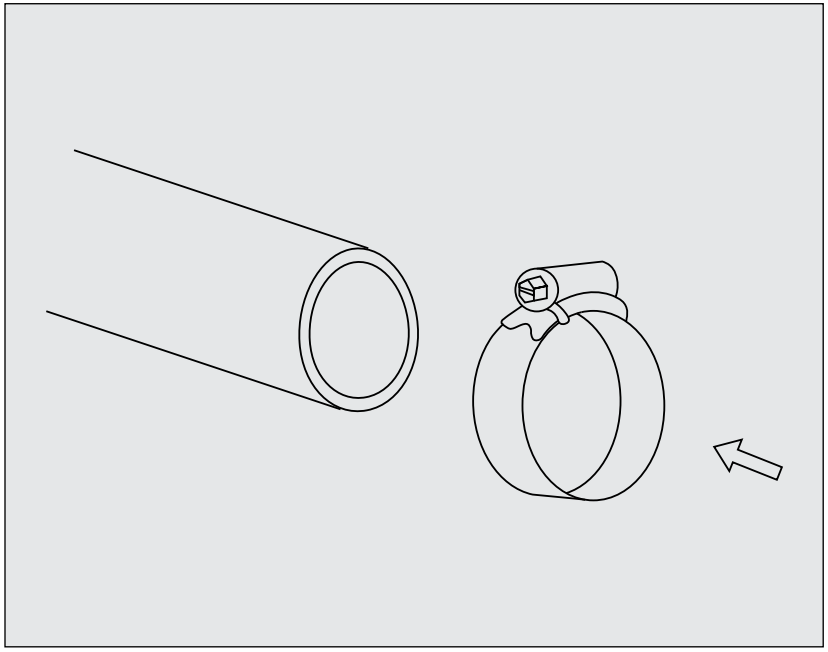

Drawing: 4.7

Fitting the Tank & Pump

gap between the hose and the inserted pipe without denting the pipe beneath. (Drawing 4.7). Slip a pipe insert into the other end of the 22mm pipe now attached to the pump. Mark a pencil line on the end of the length of pipe at the standard distance it should slot into a speedfit fitting. Unlock one neck of a 22mm speedfit Elbow and push it onto the end of the length of pipe with the open end of the Elbow facing up. (Drawing 4.8) Make sure the pipe slides fully up to the pencil line. Tighten the neck of the elbow clockwise and seal it in place. Hold the length of pipe with the elbow attached parallel to the floor, balance a spirit level on top of the pipe for accuracy but check by eye. If the pump is positioned correctly this pipe should reach to the vertical pipe running down the wall on the left side of the system. If it does not then pull the pump slightly

Caution
Do not be tempted in haste to move the pump into place by pulling at the pipes.
This jeopardises the seal on the fittings

forward.
Hold the open end of the elbow against the vertical pipe on the wall to work out where the down pipe needs to be cut. Check the pipe from the pump is perfectly parallel, has not moved and the elbow is square. Mark the point on the vertical pipe where the top open end of the elbow sits. This is not the cut line, now add the amount of pipe that will insert into the fitting. Mark this extra distance on the pipe and cut the vertical pipe on the wall to the correct length. Push a pipe insert into the cut end of pipe. Open the neck of the Elbow speedfit fitting and push the vertical pipe firmly into the open hole of the coupler. Open one of the talon hinged pipe clips holding the pipe on the wall to make this process easier. Turn the neck of the fitting

Caution
The pipe work around the pump is the most vulnerable on the system. It bears the ongoing impact of the rotating motor.

clockwise to fix it firmly in place. Look closely and check the pipe that runs horizontally from the pump to the wall remains parallel to the floor and that the vertical pipe running down the wall remains perfectly square. Ensure the two pipes form a right angle, scan by eye but double check with a spirit level.

4.7 Use the plastic pipe cutters to cut a length of 22mm grey barrier pipe 170mm long. Push one end of the 22mm pipe into the reinforced hose connected to the bottom outlet from the pump head. Push the 22mm pipe inside the hose by 25mm, twist the 22mm pipe to make sure it pushes securely inside. Open a 16mm to 25mm hose clip with a flat head screwdriver and thread the hose clip over the unattached end of the 22mm pipe and onto the hose that sits over the inserted pipe. Fasten the hose clip in place using a screwdriver so that is sits 10mm from the end of the hose. Make sure the hose clip seals any gap between the hose and inserted pipe but is not so tight that it dints the pipe beneath. Slide a pipe insert into the other end of the 22mm pipe. Scribe a line on the short

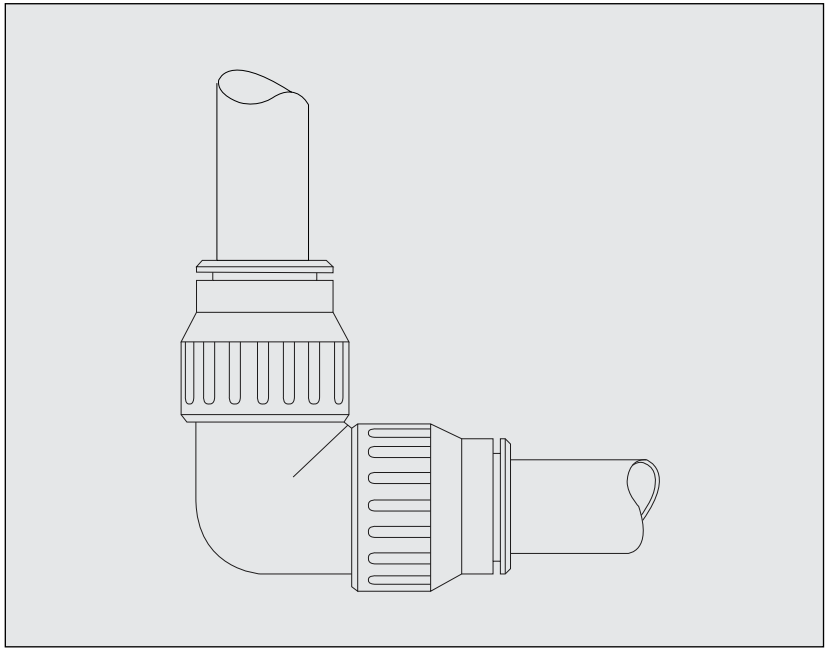

Drawing: 4.8

Fitting the Tank & Pump

piece of grey pipe to indicate how far the pipe should fit into a coupler. Open the neck of 22mm Elbow and push this onto the end of the pipe attached to the hose. Check to see the pencil line mark is against the outside edge of the neck of the fitting in order to make sure the pipe is fully inserted in place. Ensure the right angle being formed by the elbow is pointing right and lock the fitting in place.

4.8 Use the plastic pipe cutters to cut another section of grey barrier pipe 170mm long. Insert a pipe insert into either end. Make sure they are firmly in place and flush with the edges of the cut pipe. Mark a pencil line on one end of the pipe to indicate how far the pipe should fit into a coupler. Push this end into the open end of the elbow joint forming a right angle with the pump. Check the depth the pipe is pushed in by checking the neck lines up against the pencil line. Lock the fitting shut by turning it clockwise.

4.9 Unscrew both compression nuts on the 22mm lever bore valve by hand, take out the two olives inside the metal fitting. Push one of the nuts over the 22mm piece of pipe that protrudes from the plastic push fit elbow coupler attached from the pump. Make sure the nut goes on with the smaller edge first then slide the olive in place onto the pipe (Drawing 4.9). Push the pipe with the nut and washer firmly into the open screw threaded end of the metal valve until it cannot go in any further. Use two 8” adjustable wrenches to tighten the nut in place onto the main body of the valve. Hold one rench firmly on the body of the valve to steady it while

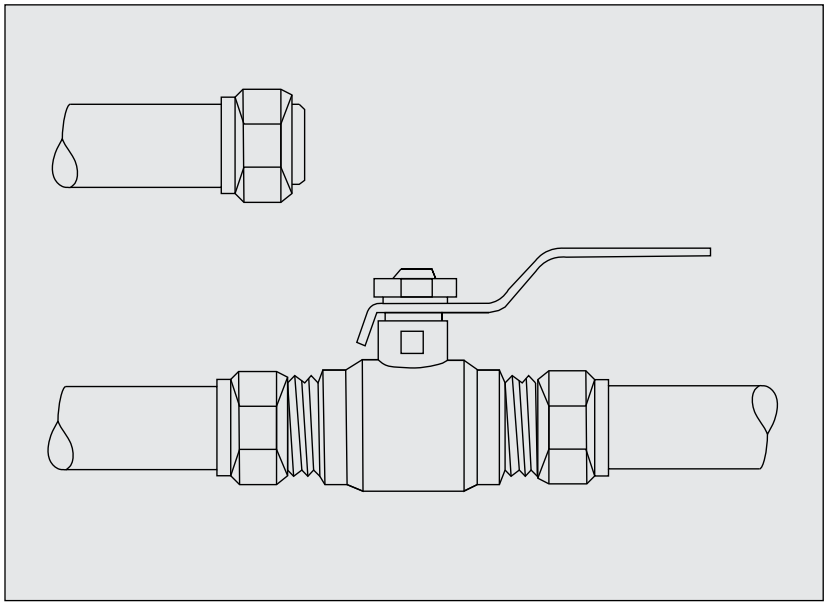

Drawing: 4.9

the other moves the nut around clockwise to tighten it. Tighten the nut as much as possible without damaging the pipe underneath. Make sure the valve lever is on the top of the pipe for ease of access.

4.10 Use the plastic pipe cutters to cut a final section of pipe that is 170mm long. Push a pipe insert into either end of the cut pipe section. Place the remaining nut and washer from the lever bore valve onto one end of the pipe. Push the end of the pipe with the washer and nut into the lever bore valve making sure the end butts up against the ledge shoulder. Use the two adjustable wrenches to tighten

Caution
The pipes must not be able to turn inside this valve.

the pipe firmly in place.

4.11 Facing the installation wall, position the black 25 gallon open top storage tank (Drawing 4.10) parallel and to the right of the pump with the short sides facing the wall and the long ones in line with the pump. Hold the pipe running from the bottom inlet of the pump, with the elbow and valve, parallel to the floor to form a perfect right angle; stand directly over the pipe work to check it by eye and double check it with a spirit level. Position the tank so that this pipe touches the outside edge on the bottom left hand side. Draw around the pipe, with a pencil, onto the outside surface of the black plastic tank to mark the

Caution
Look inside the tank to check the position marked for the tank connector does not hit any of the mouldings inside the tank that give it strength.

Fitting the Tank & Pump

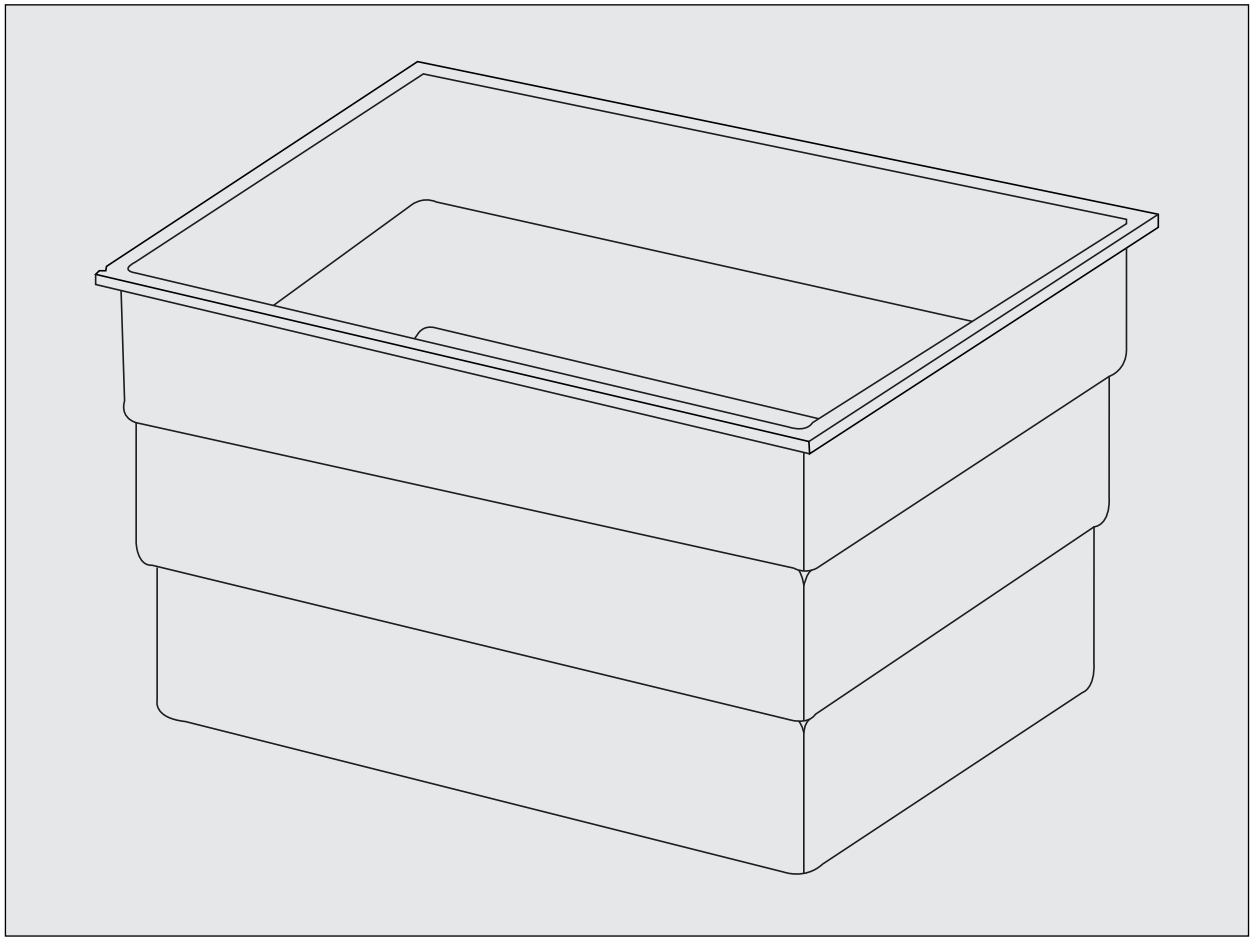

Drawing: 4.10

position for the tank connector. Mark the position with two 30mm sections of masking tape to form a cross. Re-apply the pencil mark onto the tape. Use a 29mm hole saw and cordless drill to drill a hole for the tank connector on the marked position. (Drawing 4.11) Press the drill down firmly but slowly. Allow the drill bit in the centre of the cutter to break the surface first then slowly let the hole cutter cut away the larger hole. Once the hole is cut use a file to file away the rough cut edges and collect all the plastic debris from inside the tank.

Caution
Take extra care and ensure that no plastic fragments are left behind in the tank.

Unscrew the tank connector. (Drawing 4.12a and b) Fit the connectors in the drilled hole so that washer and nut is inside the tank. Hand tighten the nut forming a water tight seal around the tank. Push the pipe that runs from the pump, to the elbow to the bore valve firmly into the tank connector. Pull the pipe to check that it is firmly in place. (Drawing 4.13).

Fitting the Tank & Pump

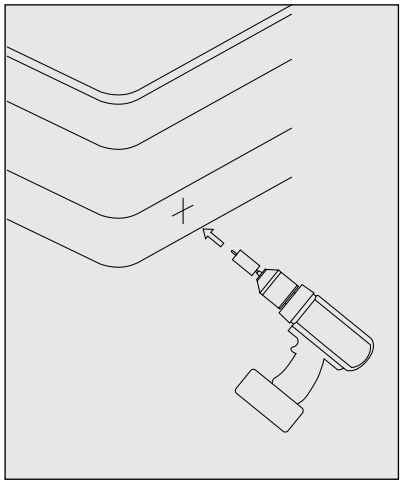

Drawing: 4.11

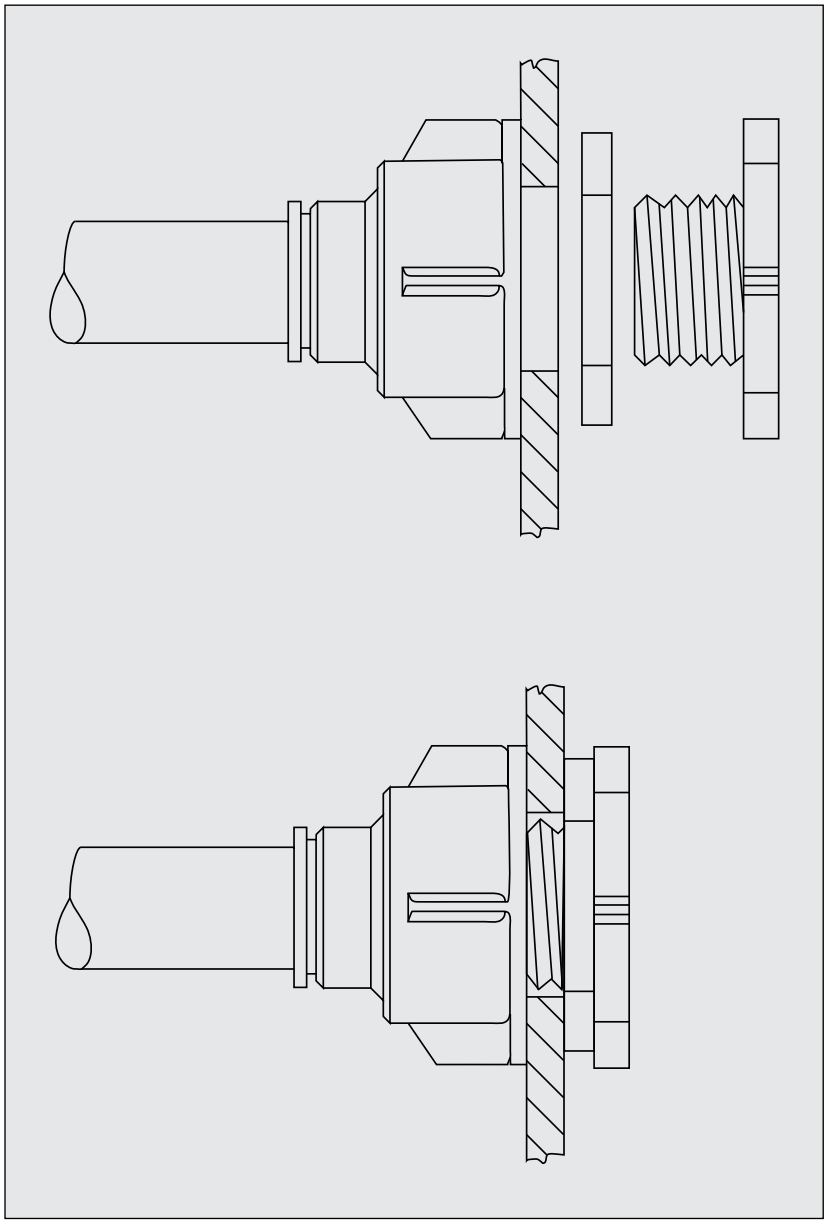

Drawing: 4.12a

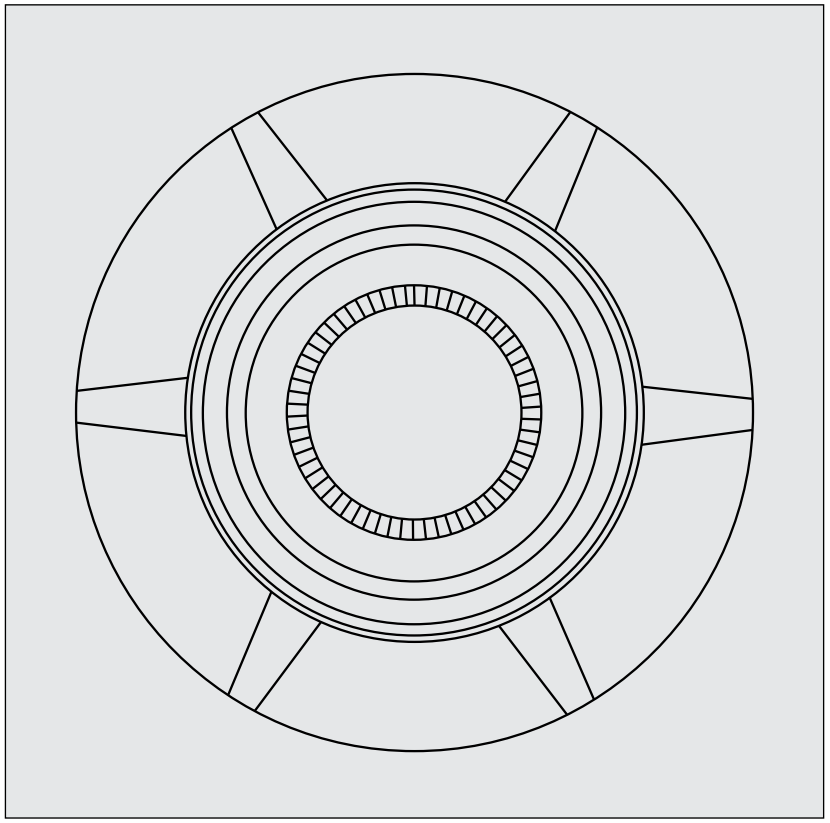

Drawing: 4.12b

Fitting the Tank & Pump

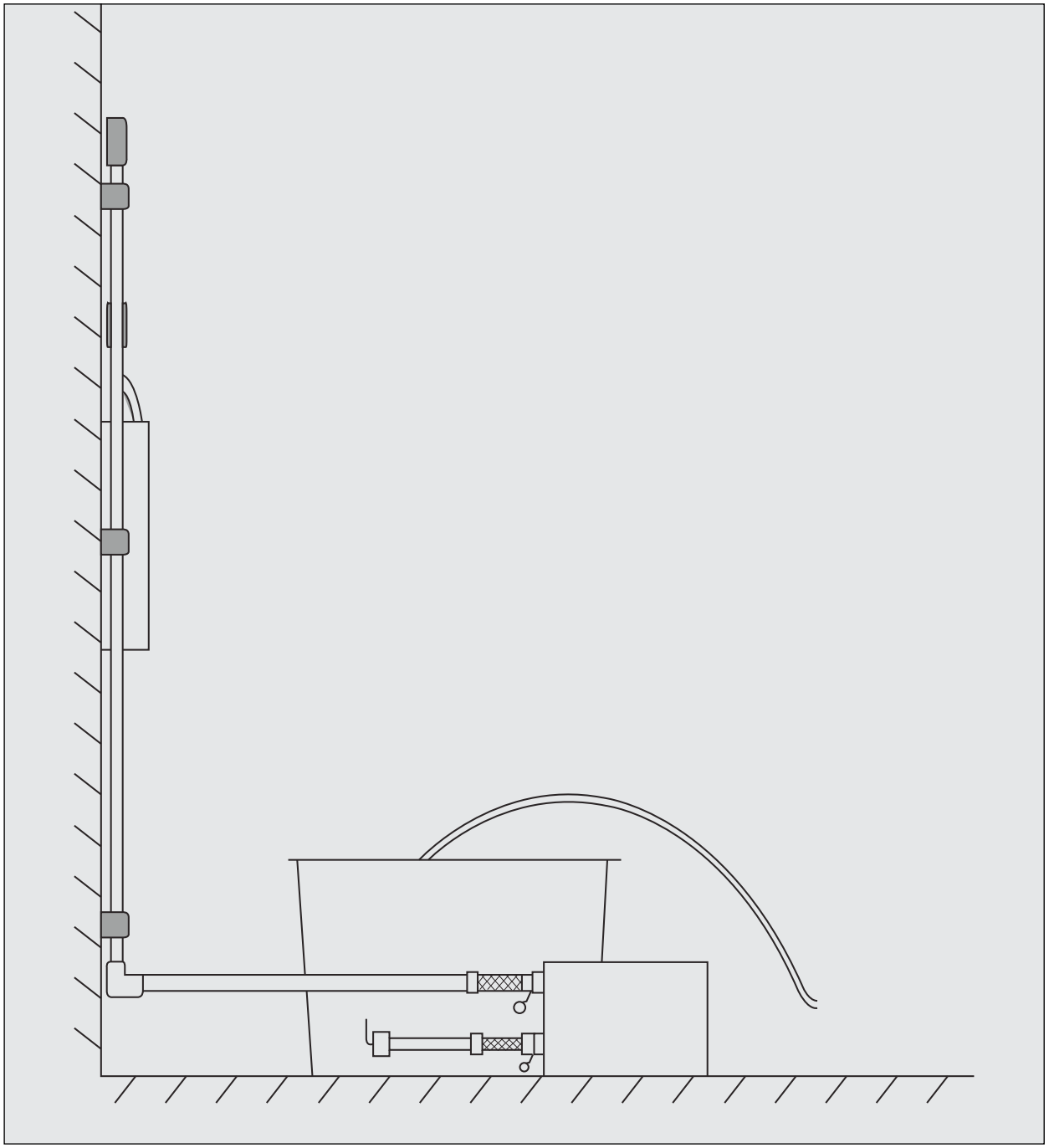

Drawing: 4.13

Inside

Inside

I took advantage of being at the seaside to lay in a store of sucking-stones. They were pebbles but I call them stones. Yes, on this occasion I laid in a considerable store. I distributed them equally between my four pockets, and sucked them turn and turn about. This raised a problem which I first solved in the following way. I had say sixteen stones, four in each of my four pockets these being the two pockets of my trousers and the two pockets of my greatcoat. Taking a stone from the right pocket of my greatcoat, and putting it in my mouth, I replaced it in the right pocket of my greatcoat by a stone from the right pocket of my trousers, which I replaced by a stone from the left pocket of my trousers, which I replaced by a stone from the left pocket of my greatcoat, which I replaced by the stone which was in my mouth, as soon as I had finished sucking it. Thus there were still four stones in each of my four pockets, but not quite the same stones. And when the desire to suck took hold of me again, I drew again on the right pocket of my greatcoat, certain of not taking the same stone as the last time. And while I sucked it I rearranged the other stones in the way I have just described. And so on. But this solution did not satisfy me fully. For it did not

escape me that, by an extraordinary hazard, the four stones circulating thus might always be the same four. In which case, far from sucking the sixteen stones turn and turn about, I was really only sucking four, always the same, turn and turn about. But I shuffled them well in my pockets, before I began to suck, and again, while I sucked, before transferring them, in the hope of obtaining a more general circulation of the stones from pocket to pocket. But this was only a makeshift that could not long content a man like me. So I began to look for something else …

I might do better to transfer the stones four by four, instead of one by one, that is to say, during the sucking, to take the three stones remaining in the right pocket of my greatcoat and replace them by the four in the right pocket of my trousers , and these by the four in the left pocket of my trousers, and these by the four in the left pocket of my greatcoat, and finally these by the three from the right pocket of my greatcoat, plus the one, as soon as I had finished sucking it, which was in my mouth. Yes, it seemed to me at first that by so doing I would arrive at a better result. But on further reflection I had to change my mind and confess that the circulation of the

stones four by four came to exactly the same thing as their circulation one by one. For if I was certain of finding each time, in the right pocket of my greatcoat, four stones totally different from their immediate predecessors, the possibility nevertheless remained of my always chancing on the same stone, within each group of four, and consequently of my sucking, not the sixteen turn and turn about as I wished, but in fact four only, always the same, turn and turn about. So I had to seek elswhere than in the mode of circulation. For no matter how I caused the stones to circulate, I always ran the same risk. It was obvious that by increasing the number of my pockets I was bound to increase my chances of enjoying my stones in the way I planned, that is to say one after the other until their number was exhausted. Had I had eight pockets, for example, instead of the four I did have, then even the most diabolical hazard could not have prevented me from sucking at least eight of my sixteen stones, turn and turn about. The truth is I should have needed sixteen pockets in order to be quite easy in my mind. And for a long time I could see no other conclusion than this, that short of having sixteen pockets, each with its stone, I could never reach the goal I had set

myself, short of an extraordinary hazard. And if at a pinch I could double the number of my pockets, were it only by dividing each pocket in two, with the help of a few safety-pins let us say, to quadruple them seemed to be more than I could manage. And I did not feel inclined to take all that trouble for a half-measure. For I was beginning to lose all sense of measure, after all this wrestling and wrangling, and to say, All or nothing. And if I was tempted for an instant to establish a more equitable proportion between my stones and my pockets , by reducing the former to the number of the latter, it was only for an instant. For it would have been an admission of defeat. And sitting on the shore, before the sea, the sixteen stones spread out before my eyes, I gazed at them in anger and perplexity …

One day suddenly it dawned on me, dimly, that I might perhaps achieve my purpose without increasing the number of my pockets, or reducing the number of my stones, but simply by sacrificing the principle of trim. The meaning of this illumination, which suddenly began to sing within me, like a verse of Isaiah, or of Jeremiah, I did not penetrate at once, and notably the word trim, which I had never met with, in this

sense, long remained obscure. Finally I seemed to grasp that this word trim could not here mean anything else, anything better, than the distribution of the sixteen stones in four groups of four, one group in each pocket, and that it was my refusal to consider any distribution other than this that had vitiated my calculations until then and rendered the problem literally insoluble. And it was on the basis of this interpretation, whether right or wrong, that I finally reached a solution, inelegant assuredly, but sound, sound. Now I am willing to believe, indeed I firmly believe, that other solutions to this problem might have been found and indeed may still be found, no less sound, but much more elegant than the one I shall now describe, if I can ...

Good. Now I can begin to suck. Watch me closely. I take a stone from the right pocket of my greatcoat , suck it, stop sucking it, put it in the left pocket of my greatcoat, the one empty (of stones). I take a second stone from the right pocket of my greatcoat, suck it put it in the left pocket of my greatcoat. And so on until the right pocket of my greatcoat is empty (apart from its usual and casual contents) and the six stones I have just sucked, one after the other, are all in

the left pocket of my greatcoat. Pausing then, and concentrating, so as not to make a balls of it, I transfer to the right pocket of my greatcoat, in which there are no stones left, the five stones in the right pocket of my trousers, which I replace by the five stones in the left pocket of my trousers, which I replace by the six stones in the left pocket of my greatcoat. At this stage then the left pocket of my greatcoat is again empty of stones, while the right pocket of my greatcoat is again supplied, and in the right way, that is to say with other stones than those I have just sucked. These other stones I then begin to suck, one after the other, and to transfer as I go along to the left pocket of my greatcoat, being absolutely certain, as far as one can be in an affair of this kind, that I am not sucking the same stones as a moment before, but others. And when the right pocket of my greatcoat is again empty (of stones), and the five I have just sucked are all without exception in the left pocket of my greatcoat, then I proceed to the same redistribution as a moment before, or a similar redistribution, that is to say I transfer to the right pocket of my greatcoat, now again available, the five stones in the right pocket of my trousers, which I replace by the six stones

in the left pocket of my trousers, which I replace by the five stones in the left pocket of my greatcoat. And there I am ready to begin again. Do I have to go on?

There was something more than a principle I abandoned, when abandoned the equal distribution, it was a bodily need. But to suck the stones in the way I have described, not haphazard, but with method, was also I think a bodily need. Here then were two incompatible bodily needs, at loggerheads. Such things happen. But deep down I didn't give a tinker's curse about being off my balance, dragged to the right hand and the left, backwards and forewards. And deep down it was all the same to me whether I sucked a different stone each time or always the same stone, until the end of time. For they all tasted exactly the same. And if I had collected sixteen, it was not in order to ballast myself in such and such a way, or to suck them turn about, but simply to have a little store, so as never to be without. But deep down I didn't give a fiddler's curse about being without, when they were all gone they would be all gone, I wouldn't be any the worse off, or hardly any. And the solution to which I rallied in the end

was to throw away all the stones but one, which
I kept now in one pocket, now in another, and
which of course I soon lost, or threw away,
or gave away, or swallowed ...

Inside

Constructing the
Pipes that feed
the Paintings

Constructing the Pipes that feed the Paintings

Tools and equipment:

Polythene dust sheet
Pipe cutters
3m x 15mm grey barrier pipe
15mm Isolating valve x 4
12 x 15mm pipe inserts
2 x 8” adjustable wrenches
Scissors
1m x 8mm x 11mm (5/16 inch) Clear Unreinforced PVC Tubing Hose Pipe
10mm I.D X 16mm O.D Clear translucent Silicone Hose
Flat head Screwdriver
8 x 13mm - 20mm Jubilee Hose Clip

Constructing the Pipes that feed the Paintings

08.51 3 Apr:
Retelling: Tim Ingold's Correspondences: Knowing from the Inside.
Is this is a conversation?
This is a process: it carries on.
This is open ended:
it 'invites a follow-on'
This is dialogical.
'it is from… dialogical engagements that knowledge continually emerges'. (TI, 2017)
'To join a conversation is to be ever-present at the cusp where ideas are on the point of making their appearance, of taking shape'. (TI, 2017)
Who is this talking to?
Who talks back?

18.01 3 Apr:
This requires cooperation.

11.49 3 Apr:
Does the installation escape the status of a specific art form?
The work is escaping the status of a specific art form.

11.50 3 Apr:
Caution: Is this repeating itself?

5.1

Retelling Juhani Pallasmaa's Drawing Hand in The Thinking Hand.
The object is being dissected and put back together again. (JP, 2009)

08.51 3 Apr:
This is taking shape.

11.54 Today:
This word in my ear text is being written as a series of comments in a google drive document that

5.0 Use the plastic pipe cutter to cut four 270mm lengths and four 100mm lengths of 15mm barrier pipe from the 3m length.

Caution
These feed pipes use a smaller diameter pipe.

Push pipe inserts into both ends of the 270mm lengths and into one end of the 100mm lengths, make sure each insert is flush with the edge of the pipe. By hand unscrew the two compression nuts on one of the 15mm Isolating Valves and remove the olives inside. Slide one of the nuts onto the end of a 270mm length of pipe followed by an olive. Push this pipe into the main body of the metal valve making sure the arrow on the valve is pointing away from the pipe. Close the nut by hand (Drawing 5.0) Hold the body of the valve with one 8" adjustable wrench and tighten the nut with the other wrench. Tighten the nut ¾ of a turn or until the joint is tight and the pipe cannot pull out of place. Slide the other nut onto the end of a 100mm length of barrier pipe followed by an olive, make sure it is the end of the pipe with the insert in. Push this end of the pipe into the main body of the metal compression valve. Close the nut by hand. Hold the body of the valve with one 8" adjustable wrench and tighten the nut with the other wrench. Tighten the nut ¾ of a turn or until the joint is tight and the pipe cannot pull out of place. Repeat this process with the remaining

Caution
Tightening the 15mm valves with 8" wrenches is awkward. Make sure they are properly sealed.

three isolating valves to make four identical parts.

5.1 Layout a clean polythene dust sheet on the floor and work on top of it. Use sharp scissors to cut four 100mm sections of silicone hose, make sure each cut is straight and the silone does not tear. Cut four 500mm sections of clear PVC hose.

Caution
Do not let the PVC or silicone hose touch an uncovered floor. They attract dust and are impossible to clean.

Take one 500mm piece of PVC hose and insert it into the end of a 10mm section of silicone hose by 15mm. The inside diameter of the silicone is smaller than the outside diameter of the PVC so stretch the silicone tube by repeatedly inserting a finger into the end of it. Once the PVC tube is inside the silicone tube by 15mm open a 13mm - 20mm jubilee hose clip using a flat head screwdriver and slide the clip up the pvc pipe and onto the silicone. Fasten the clip in place just over the lip of the silicone so it holds it onto the pvc tubing. Do not over tighten the clip. Ensure it is on square and that the screw head is situated to the left side of the hose. Repeat this process with the remaining sections of PVC and silicone to make four identical parts.

Caution
The work is escaping the status of a specific art form.

5.2 Take one of the parts made up from the 15mm barrier pipe and isolating valve and one of the parts made from the silicone hose and pvc pipe. Insert a finger into the unattached end of the silicone pipe to stretch it as much as possible. Lick the finger and use this to lubricate the inside of the silicone as much as possible then force the end of the silicone hose over the end of the 100mm section of grey barrier pipe by 15mm. The barrier pipe has an external diameter of 15mm and the silicone an internal diameter of 10mm. It will fit. Persevere but take care to not rip the silicone.
If the silicone rips start the process again with a new section of silicone and pvc pipe. When the silicone is securely onto the barrier pipe and is perfectly square open a 13mm - 20mm jubilee hose clip using a flat head screwdriver and slide the clip up the pvc pipe, onto the silicone and up to the point where the silicone is over the barrier pipe. Secure the clip so that there is an even gap of 5mm between the edge of the silicone and the edge of the clip.

Caution
Do not over tighten the clip and do not dint the pipe beneath. This will jeopardise the paint flow.

Make sure the screw on the clip is situated to the left side of the pipe work. Repeat this process with all the sections of PVC and silicone hose and 15mm barrier pipe and valves to make four identical parts (Drawing 5.1).

Caution
Do the words and the drawings do something different?

runs alongside the instructional text as it is being written. The document tracks the time and date each comment is made. The times recorded here are accurate. There is some back and forth over time.
The drive document has a resolve text box at the corner of each comment. If the button is pressed the comment is removed. They can be reopened. Very few have been resolved. Mostly, if they were, they were reopened.

17.56 3 Apr:
Retelling: Gerald Raunig's
A Thousand Machines
When we talk of cooperation we can draw on what Marx termed the 'social body of labour' (GR, 2010) as it tends to the machines. The worker's knowledge and skill
is embodied inside the machine.

5.2 The sections have become parts.

Retelling: Gerald Raunig's A Thousand Machines.
The opening essay 'Bicycles' has been read at least eight times throughout the duration of this project.

5.2 Each part must be identical. The smallest details are crucial, right down to the distance one pipe is inserted into another. Do not cut corners. If there is an inaccuracy repeat the process over again. Repeat the process until each part is identical to the next. No deviation.

5.3 Measure and mark onto the grey plastic pipe at the end of each of the 4 constructed parts, the standard distance the barrier pipe should insert into a speedfit fitting. Stand on a ladder, unscrew the bottom neck of all 4 speed fit T fittings along the main horizontal supply pipe (Drawing 5.2). Push each of the 4 parts into one of the speed fit T couplers. Making sure the marked pencil lines align with the neck of each fitting.

Caution
The arrows on each valve indicates the flow direction. Check each one points down towards the floor.

Open the three 15mm talon hinged pipe clips on the wall that will hold each feed pipe in place. Open 12 clips in total. Slot each feed pipe down into the open clips, ensure the screws on the jubilee clips are all in line down the left side, press the the hinged clips to close them and fix the feed pipes in place. Check the valves and jubilee clips are all perfectly aligned across the wall. Close the valves with a flat head screwdriver ensuring the screw head is in the horizontal position.

Caution
Each part must be identical.

Caution
This is repeating itself.

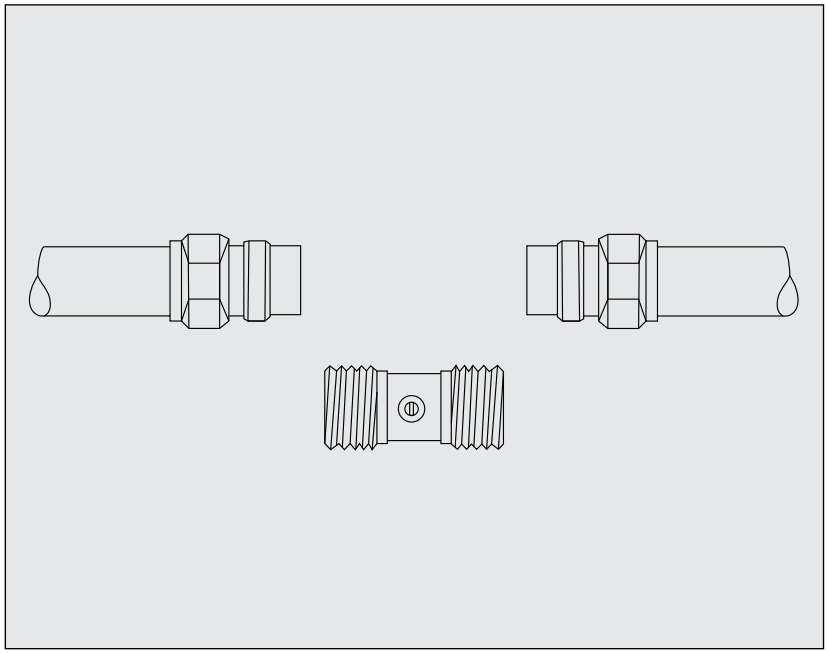

Drawing: 5.0

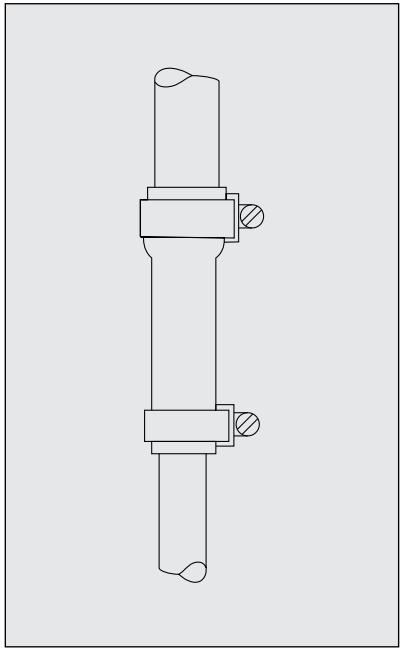

Drawing: 5.1

Constructing the Pipes that feed the Paintings

Constructing the Pipes that feed the Paintings

11.00 29 Jan:
Retelling: A walk with a friend (Una)

‘The machine is a mechanical – intellectual system of knowledge’

19.43 3 Apr:
This is not just technical or mechanistic.

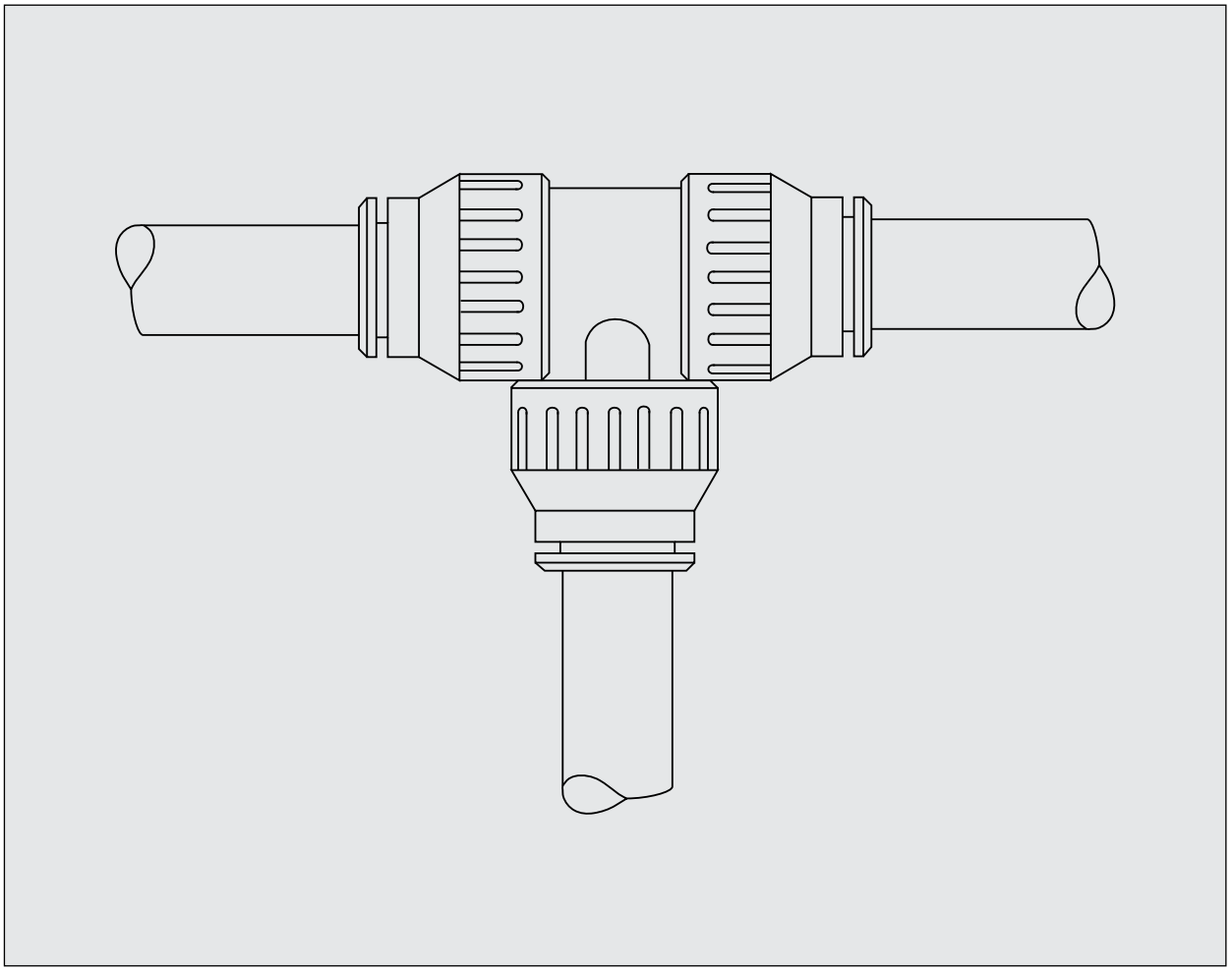

Drawing: 5.2

Installing the Pipe System

Installing the Pipe System

Tools and equipment:

12m x 22mm grey barrier pipe
Plastic pipe cutters
2 x 22mm speedfit Elbow couplers
12 x 22mm pipe insert
Pencil
Tape Measure
4 x 22mm speedfit reducing T’s
Access to a step ladder

Installing the Pipe System

6.1 Installation is not a neutral term.
Say something.

15.43 4 Apr:
This trusts this work.

15.44 4 Apr:
This is learning.
This is the work.

6.2 Sort things. This holds off the inevitable anxious process of filling.This looks like real work.

6.3 This section can't be unruly.
It is the stable mechanism

6.3 Become uncertain of the use of grey plastic barrier pipe.
Recalling Boris Groys's The Politics of Installation.
'It makes no sense to criticise any particular choices, inclusions, or exclusions made by an artist……the total space of an artistic installation can also only be rejected as a whole' (BG, 2009)

Do the parts within the whole installation avoid singular justification?

18.58: 5 Apr:
6.3 Retelling: Talking to another machine. Kenneth Goldsmith's Uncreative Writing.
Writing the instructional text feels 'stable... limited to a routine' (KG, 2011)
They are a relief.
Is this equivalent to the construction of the system itself before the fill?

6.3 This has never been

6.0 With the edge of a thumb unfasten the 22mm talon hinged pipe clips fixed in a line on the left side of the installation wall.

Caution
Does the space become the support?

Using plastic pipe cutters cut a 2m length of 22mm grey barrier pipe. Push a pipe insert into the top end of the pipe and mark on the pipe with a pencil the standard measurement a pipe should insert into a speedfit fitting. Unlock one neck of a speedfit Elbow coupler by turning it anti clockwise, push the marked end of the barrier pipe into the open neck of the coupler. Check the neck of the fitting aligns with the pencil mark on the pipe to ensure the pipe is fully inserted.

6.1 Using a ladder, climb up and lay the pipe with the Elbow coupler attached into the open pipe clips on the wall so that the elbow is 2m away from the floor with the open side of the coupler pointing right. Climb down the ladder shutting the pipe clips to fix the pipe in place. Repeat the process on the right side of the installation wall making sure that the open side of the Elbow coupler points left.

6.2 Collect together the four 22mm speedfit reducing T's. Take one T coupler in hand, make sure the reducing outlet always forms the bottom of the T, measure from the centre line of the fitting to the outside edge of the left collar with a tape measure. To check accuracy measure from the centre line of the coupler to the outside edge of the right collar. Make sure the two measurements are the same. Take note of this measurement.

6.3 Using plastic pipe cutters cut a 1.5 m length of grey barrier pipe. Push a pipe insert into one and mark on the pipe with a pencil the standard measurement a pipe should insert into a speedfit fitting. Start with the pipe fixed onto the left side of the wall, climb the ladder until the top horizontal pencil line drawn 208 cm from the floor is within easy reach. Look for the vertical pencil line that the pipe fixed to the wall with the elbow attached is following. Check the pipe is perfectly in line with the pencil line before moving on.

Caution
Any inaccuracies should be corrected.

Reach across and using the edge of a thumb open the 3 talon hinged pipe clips that run along the horizontal pencil line that makes a right angle with the pipe and elbow. Open the neck of the elbow couple that is not in use by turning it anti clockwise, push the 1.5m length of pipe into the open side, make sure this is the side with the pipe insert and the pencil mark. Push the pipe in firmly and lock the neck of the fitting by turning it clockwise. Balance the pipe on the open pipe clips along the horizontal pencil line but do not close them. Move the ladder towards the end of the 1.5m length of pipe, climb up and look at where the horizontal pencil line crosses over a vertical pencil line to make a T, make sure this is the first of the four Ts formed in pencil across the wall. This is the position for the first reducing T fitting. Take the 1.5m length of pipe laying along the horizontal pencil line and cut it at the point where the T is drawn on the wall. This is the first cut and is not accurate, it does not take into account the size of the fitting. Once the pipe sits perfectly on the T drawn in pencil on the wall, measure back from the end of the pipe the distance from the centre of a speedfit T coupler to the collar. Mark this measurement on the pipe in pencil but do not cut on this line. Now measure forwards from this pencil mark the standard measurement a pipe should insert into a speedfit fitting and mark the pipe again, cut the pipe on this line with the plastic pipe cutters. Push a pipe insert into the cut end of the pipe. Open the left side neck of one of the reducing T couplers, by twisting it anti clockwise. Push the cut pipe balancing on the clips into the open left side of the reducing T. Check that the pencil line on the pipe is flush with the neck of the coupler. Make sure the reducing outlet on the T is pointing down and is perfectly in line with the pencil line T drawn onto the wall. Once the elbow, the length of pipe and the reducing T all follow the pencil line on the wall accurately fasten the pipe in place by closing the talon hinged pipe clips.

Caution
This is an impossible task.

6.4 Using plastic pipe cutters cut a 1.5 m length of barrier pipe. Push a pipe insert into one and mark on the pipe with a pencil the standard measurement a pipe should insert into a speedfit fitting. Climb the ladder until the horizontal pencil line, 208 cm from the floor, is within easy

constructed in the same way twice.

The instructions are not all grounded with an authoritative base.

6.4 All the materials have the same weight.
None are privileged.
This is not convincing.
The aim is that all the materials are treated with the same value, and at different times different materials are privileged.

15.19 5 Apr:
These objects could not have been made simultaneously.

6.4 Deliberately avoid diagrams here. Use words.

6.4 There is no room for inaccuracy. There is room for methods of misbehaviour to test out accuracies.

17.03 5 Apr:
Determine whether what is being described has been enacted.
Enacted doesn't seem like the right term.
Does it imply acting out?
This is not acted out.
This is practiced.
Is this praxis?
This is doing.
This is - In practice.
Not staged?
It is performative.

15.34 5 Apr
The Recurrent Haunting Ghost. Essays on the Art, Life and Legacy of Marcel Duchamp by Francis M Naumann (2012) has

reach. Open the neck on the right side of the speedfit reducing T fixed in place on the wall. Facing the wall, reach across to the right and use the edge of a thumb to open the 2 x 22mm pipe clips that lay along the horizontal pencil line running from the T fitting to the point where another drawn vertical line marks the position for the next coupler to be installed.

Caution
Do not overreach.

Push the cut 1.5m length of pipe into the open right side of the reducing T held on the wall and lock the neck of the fitting by turning it clockwise. Balance the pipe on the pipe clips along the horizontal pencil line but do not close them. Move the ladder towards the end of the 1.5m length of pipe, climb up and look for where the horizontal pencil line crosses over the next vertical pencil line to make another T. Take the 1.5m length of pipe laying along the horizontal pencil line and cut it at the point where the T is drawn on the wall. This is the first cut and is not accurate. It does not take into account the size of the fitting. Once the pipe sits perfectly on the T drawn in pencil on the wall measure back from the end of the pipe the distance from the centre of a speedfit T coupler to the collar. Mark this measurement on the pipe in pencil but do not cut on this line. Now measure forwards from this pencil mark the standard measurement a pipe should insert into a speedfit fitting and mark the pipe again, cut the pipe on this line. Push a pipe insert into the cut end of the pipe. Open the left side neck of another reducing T coupler by twisting it anti clockwise. Push the cut pipe balancing on the clips into the open neck of the T. Check that the pencil line on the pipe is flush with the neck of the coupler. Make sure the reducing outlet on the T is pointing down and is perfectly in line with the pencil line T drawn onto the wall. Fasten the pipe in place by closing the talon hinged pipe clips it has been resting on. Install 2 more reducing T couplers along the 208cm pencil lines in the positions marked in pencil on the wall. Use this exact same process. Each fitting must be in line with the pencil line below. Once the forth T fitting is in place, follow the same process again but insert the final length of pipe into the elbow connector that forms a right angle to the floor. Check that every part of the pipe work is perfectly aligned with the pencil marks below. By eye ensure the pipe work is straight and use a spirit level to check for accuracy. Move around the system from left to right and ensure every neck on each fitting is locked and all the talon hinged pipe clips are closed.

Installing the Pipe System

Installing the Pipe System

been left out on the library desk.

6.4 Care.
6.4 This is how this works.
Does this knowledge prevent another type of judgement?

22.54 5 Apr:
Is this neurotic?

22.56 5 Apr:
Is this futile?

22.57 5 Apr:
Is this working?

18.29 14 April:
Retelling: Rosalind Krauss's Mind/Body Problem: Robert Morris in Series.
Samuel Beckett takes up language as a 'solution' to the mind/body problem but he does so ironically 'not understanding language to have dissolved the difference, but merely to have added an irrational third term'. (RK, 1994)
Is this irrational?
This is impossible.

22.56 5 Apr:
Is this documenting?
This is doing not proving.
Documenting is more than proving.
A document is more than evidence.
Think of a rumour or anecdote as being a document. There are living documents that are doing things.

6.4 The pencil marks on the walls expose the construction process.
Do not erase them.

Erase them.
Leaving the marks could be read as a known aesthetic rather than a mode of learning.

How much of the process of construction should remain visible?

What does the object give away? Erase them, the object exposes itself in other ways.

Installing the Pipe System

Installing the Pipe System

Make

Make

Love, Kate (2005) *The experience of art as a living through of language* in Butt, G, Ed. 2005. After criticism: new responses to art and performance (Oxford: Blackwell)

The Experience of Art as a Living Through of Language

Kate Love

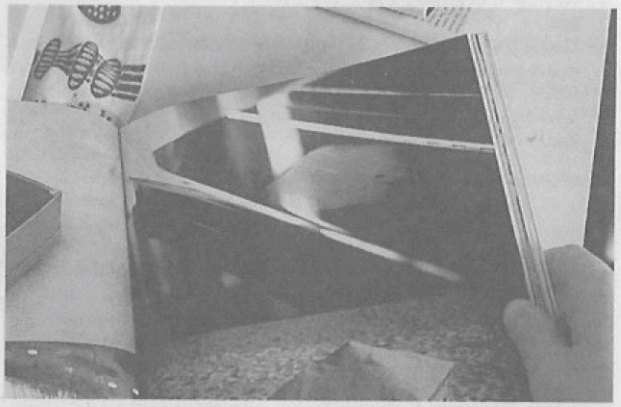

Figure 8 Kate Love, *Untitled*, 2002. Photo by Julian C. Lowe. Reproduced with permission

"I think sculpture happens in that space, between the object and the person who is looking at it. It's obvious but it's still mysterious how much you can do with that space."[1]

But everything seemed to be moving at dead slow speed, even the rain, and it was best just to try to endure it, best just to try to *meld into* every second (surviving) without noticing where they began or where they ended, but to just keep on going through each moment as it peaked and troughed, peaked and troughed, moment-moment-moment-moment, for years.

Any request to write tends to galvanize meshes of thought, which have been circulating for some time but haven't necessarily surfaced in any particular formation. The following text, in retrospect, is actually about the process of encouraging such constellations to contingently cohere within a particular context. The context in question is the space of art school life. For the last 10 to 15 years art education in England has played around with the relationship of autobiographical and political accounts of personal experience and its representation in art. Identity politics in the early 1980s seemed to make this an imperative in art schools more than in many other disciplines. This text pieces together aspects of this instruction and its effect on art criticism. In an attempt to undermine the theory/practice binary, still tenaciously holding on in art school parlance, an auxiliary intention was to posit the idea that we don't have to bring words *to* art but rather that we can use the experience of art as a form of criticism itself. In so doing, I discovered that experiences with art can function very well as forms of analysis in their own right – providing interpretations of experience that are far more politically useful than conventional accounts. Moreover, on a personal level such a strategy enabled me to move from that flat, dark place of "nothing's worth doing" to activity and light.

Part 1: The Destruction of Experience?

If this present text is an attempt to scrutinize experience and its relationship to art and the politics of subjectivity – both now and in the recent past – then a reasonable place to start might be with the suggestion that *experience* is "so over." For example, in Giorgio Agamben's book *Infancy and History: Essays on the Destruction of Experience* he discusses the poverty of experience as being a characteristic of modernity originating, as Walter Benjamin had diagnosed, with the horrors of World War One.[2]

Orozco?

Find this?

What is this space in relation to the manual?

How is it possible to give words to the activity of making the work - especially when it is applied retrospectively?

'Girl chewing Gum' look at this again - does it reveal anything back to the manual?

Make

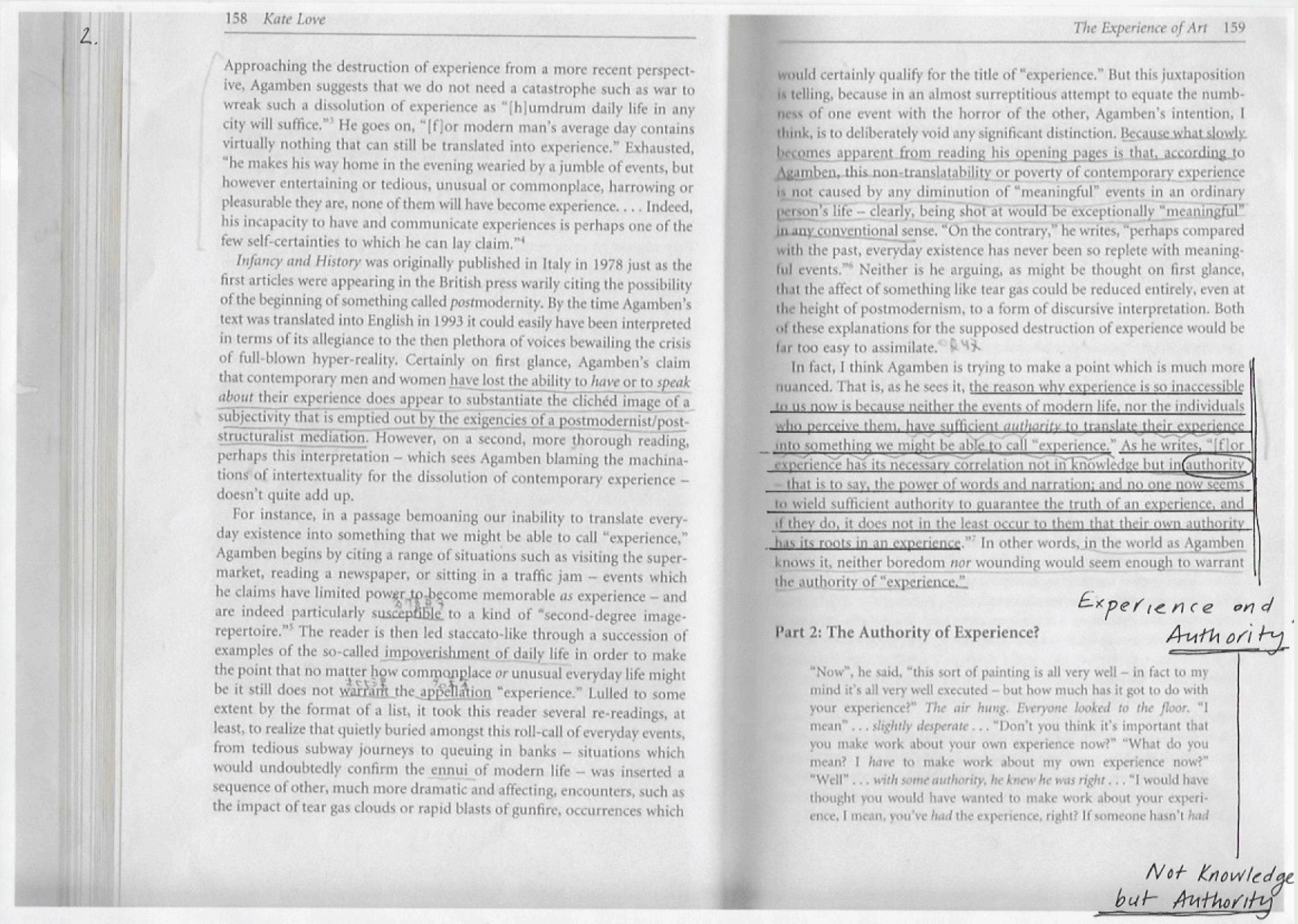

2.

Approaching the destruction of experience from a more recent perspective, Agamben suggests that we do not need a catastrophe such as war to wreak such a dissolution of experience as "[h]umdrum daily life in any city will suffice."[3] He goes on, "[f]or modern man's average day contains virtually nothing that can still be translated into experience." Exhausted, "he makes his way home in the evening wearied by a jumble of events, but however entertaining or tedious, unusual or commonplace, harrowing or pleasurable they are, none of them will have become experience. . . . Indeed, his incapacity to have and communicate experiences is perhaps one of the few self-certainties to which he can lay claim."[4]

Infancy and History was originally published in Italy in 1978 just as the first articles were appearing in the British press warily citing the possibility of the beginning of something called *post*modernity. By the time Agamben's text was translated into English in 1993 it could easily have been interpreted in terms of its allegiance to the then plethora of voices bewailing the crisis of full-blown hyper-reality. Certainly on first glance, Agamben's claim that contemporary men and women have lost the ability to *have* or to *speak about* their experience does appear to substantiate the clichéd image of a subjectivity that is emptied out by the exigencies of a postmodernist/post-structuralist mediation. However, on a second, more thorough reading, perhaps this interpretation – which sees Agamben blaming the machinations of intertextuality for the dissolution of contemporary experience – doesn't quite add up.

For instance, in a passage bemoaning our inability to translate everyday existence into something that we might be able to call "experience," Agamben begins by citing a range of situations such as visiting the supermarket, reading a newspaper, or sitting in a traffic jam – events which he claims have limited power to become memorable *as* experience – and are indeed particularly susceptible to a kind of "second-degree image-repertoire."[5] The reader is then led staccato-like through a succession of examples of the so-called impoverishment of daily life in order to make the point that no matter how commonplace *or* unusual everyday life might be it still does not warrant the appellation "experience." Lulled to some extent by the format of a list, it took this reader several re-readings, at least, to realize that quietly buried amongst this roll-call of everyday events, from tedious subway journeys to queuing in banks – situations which would undoubtedly confirm the ennui of modern life – was inserted a sequence of other, much more dramatic and affecting, encounters, such as the impact of tear gas clouds or rapid blasts of gunfire, occurrences which

would certainly qualify for the title of "experience." But this juxtaposition is telling, because in an almost surreptitious attempt to equate the numbness of one event with the horror of the other, Agamben's intention, I think, is to deliberately void any significant distinction. Because what slowly becomes apparent from reading his opening pages is that, according to Agamben, this non-translatability or poverty of contemporary experience is not caused by any diminution of "meaningful" events in an ordinary person's life – clearly, being shot at would be exceptionally "meaningful" in any conventional sense. "On the contrary," he writes, "perhaps compared with the past, everyday existence has never been so replete with meaningful events."[6] Neither is he arguing, as might be thought on first glance, that the affect of something like tear gas could be reduced entirely, even at the height of postmodernism, to a form of discursive interpretation. Both of these explanations for the supposed destruction of experience would be far too easy to assimilate.

In fact, I think Agamben is trying to make a point which is much more nuanced. That is, as he sees it, the reason why experience is so inaccessible to us now is because neither the events of modern life, nor the individuals who perceive them, have sufficient *authority* to translate their experience into something we might be able to call "experience." As he writes, "[f]or experience has its necessary correlation not in knowledge but in authority – that is to say, the power of words and narration; and no one now seems to wield sufficient authority to guarantee the truth of an experience, and if they do, it does not in the least occur to them that their own authority has its roots in an experience."[7] In other words, in the world as Agamben knows it, neither boredom *nor* wounding would seem enough to warrant the authority of "experience."

Experience and Authority

Part 2: The Authority of Experience?

> "Now", he said, "this sort of painting is all very well – in fact to my mind it's all very well executed – but how much has it got to do with your experience?" *The air hung. Everyone looked to the floor.* "I mean" . . . *slightly desperate* . . . "Don't you think it's important that you make work about your own experience now?" "What do you mean? I *have* to make work about my own experience now?" "Well" . . . *with some authority, he knew he was right* . . . "I would have thought you would have wanted to make work about your experience, I mean, you've *had* the experience, right? If someone hasn't *had*

Not Knowledge but Authority

3.

the experience they wouldn't be able to make work about it would they?" "Do you mean she *has* to make work about her experience? Why has *she* got to do it?" "Well let's look at it this way: I couldn't make work about it *could* I, I mean *I* haven't experienced it – don't be so silly. Right. Let's move on to the next space."

If we begin to address Agamben's thoughts in the context of art, and in particular the context of art education, how seriously can we take the proposition that this supposed lack of authority is responsible for the destruction of contemporary experience? For example, would the claim that we can no longer have or communicate experience still stand up, and how might this affect our understanding of the experiences of art in general?

[*Lecture room. Tiered, hot and stuffy*]

The manual is a work about my own experience

Is this valid?

LECTURER. Right then everyone. I want us to look at the first part of the argument that "no one now seems to wield sufficient authority to guarantee the truth of an experience" and to ask – if this is actually correct – then why are so many of you in today's art schools still encouraged to make work about your "own" experience/subjectivity/visibility etc.?[8]

I do agree that, at the beginning of the twenty-first century, this is very much a question of degree, in that a lot of you may well have gone through and out of the other side of the simple injunction "to make work about your own identity." But ask yourselves: do you think that there is still an implicit understanding in the studio that it would be odd to make a work about an experience which bore no relation, seemingly, to the experiences that you have undergone?

Let's try another angle. If Agamben *is* correct to say that "no one has sufficient authority to guarantee the truth of an experience" will this mean that college administrators will cease to show such palpable bemusement and/or disbelief when a white student starts talking about their photographic project as black-identified? Or, would there be a whiff of embarrassment rather than an intensification of interest the next time someone pipes up in a seminar about the autobiographical detail that underpins their work?

Possibly, possibly *not*.

For even though Agamben might wish to assert that no one can claim the truth of an experience, I would propose, on the contrary, that there is still a lingeringly consensual view that to have been through a particular experience of something *does* guarantee some sort of authority or authentic knowledge of *that something*.

Authority or Authentic Knowledge

And furthermore, by extension, that it just doesn't feel right or appropriate to make work about an experience of something (or make critical estimations of it) if you haven't actually been through that something – however attenuated from *that something* the resulting work might be.

This is very important in the context of so-called "marginal subjects" (whoever is so designated at any one time) in that this reading of experience as authenticity implies that *ipso facto* the marginal subject's experience of otherness is so authentically unknowable – so elsewhere – that it couldn't possibly make sense to the rest of "us." And therefore you should be encouraged – compelled even – to make work about your experience so as to let everyone else know what it's really like. By the same token, of course, it was thought that it would make no sense whatsoever for someone, particularly from a so-called dominant or powerful subject position, to make work about marginality or difference. That would be just too grisly!

You only have to remember, for instance, the incredulity that greeted Jacques Derrida's desire to write "as (a) woman" in 1973. This statement elicited considerable indignation from both women and men who seemed surprised, and angered, even, by the suggestion that a man *could* or would even *want* to write (or read) as a women if "he" hadn't experienced "biological womanhood."[9] Given the debates at the time, which were beginning to encourage the idea of the social construction of subjectivity, it would have been slightly unusual if this furore was entirely caused by the thought of inhabiting the position of "woman" as it might be conceived of in a socially and historically constituted sense. But underneath all this, the actual row (though strangely, this was not acknowledged at the time) was really about experience. Because of the tendency to collapse experience to self-presence, it was almost impossible to believe that anyone would dare to suggest that they could write about *another's* experience – particularly if they were intending to write with any acuity – because "your" experience was the one thing that you, and you alone, could have access to and own as your "own."

Even in the late 1990s, when it was more or less established, theoretically at least, that the recognition of experience *as* experience is *always already* subject to discursive interpretation, in the last instance, you might well hear someone say "Oh but I'm not talking about *actual* experience," as if, by some miracle, experience as an everyday relation to the world might transcend any linguistic/structural/historical determination.[10]

It may well be 28 years since Derrida's nascent attempt to deconstruct essentialized identity, but there is still a tendency in art schools, even now,

Make

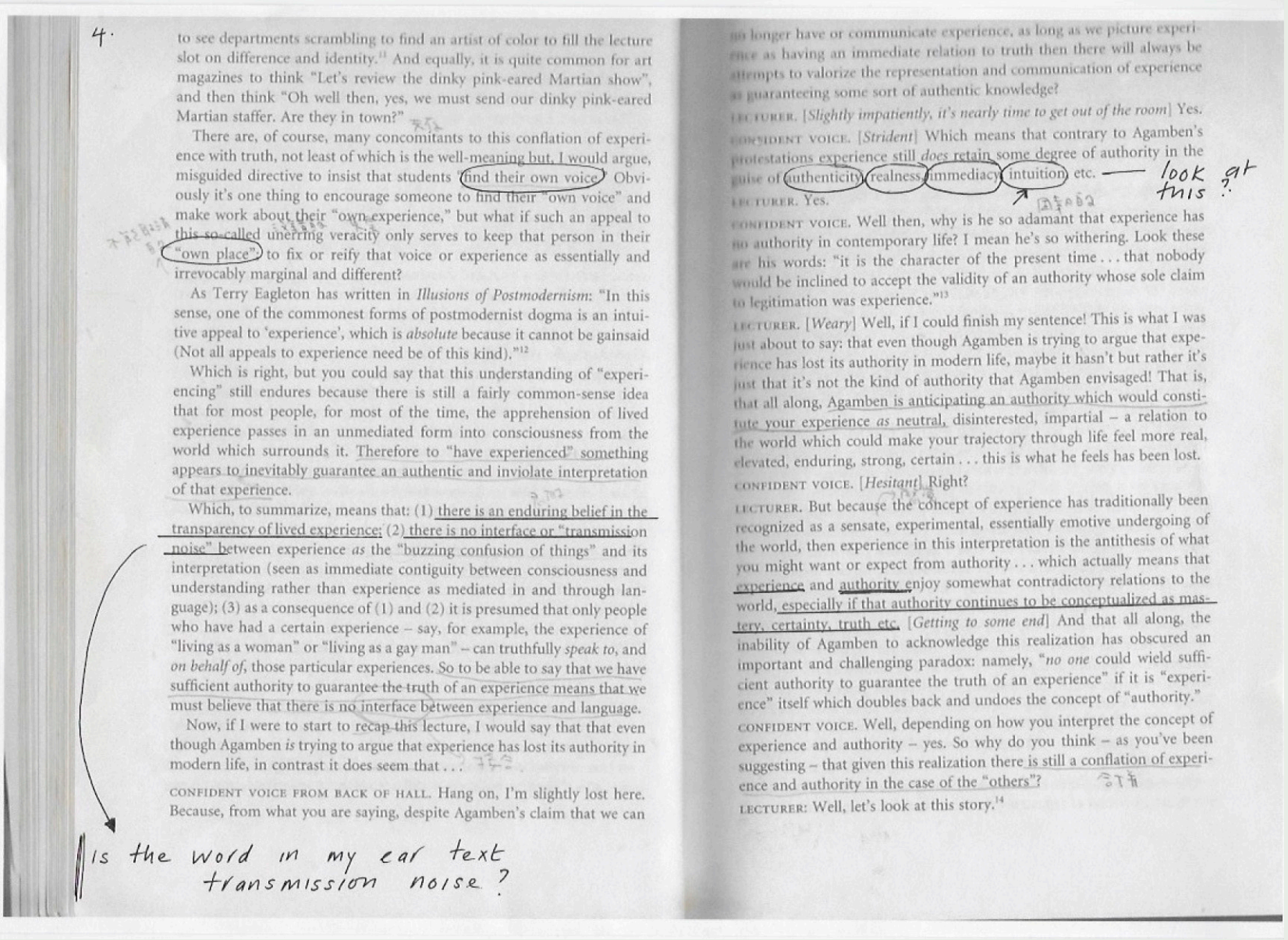

4.

to see departments scrambling to find an artist of color to fill the lecture slot on difference and identity.[11] And equally, it is quite common for art magazines to think "Let's review the dinky pink-eared Martian show", and then think "Oh well then, yes, we must send our dinky pink-eared Martian staffer. Are they in town?"

There are, of course, many concomitants to this conflation of experience with truth, not least of which is the well-meaning but, I would argue, misguided directive to insist that students 'find their own voice'. Obviously it's one thing to encourage someone to find their "own voice" and make work about their "own experience," but what if such an appeal to this so-called unerring veracity only serves to keep that person in their "own place", to fix or reify that voice or experience as essentially and irrevocably marginal and different?

As Terry Eagleton has written in *Illusions of Postmodernism*: "In this sense, one of the commonest forms of postmodernist dogma is an intuitive appeal to 'experience', which is *absolute* because it cannot be gainsaid (Not all appeals to experience need be of this kind)."[12]

Which is right, but you could say that this understanding of "experiencing" still endures because there is still a fairly common-sense idea that for most people, for most of the time, the apprehension of lived experience passes in an unmediated form into consciousness from the world which surrounds it. Therefore to "have experienced" something appears to inevitably guarantee an authentic and inviolate interpretation of that experience.

Which, to summarize, means that: (1) there is an enduring belief in the transparency of lived experience; (2) there is no interface or "transmission noise" between experience *as* the "buzzing confusion of things" and its interpretation (seen as immediate contiguity between consciousness and understanding rather than experience as mediated in and through language); (3) as a consequence of (1) and (2) it is presumed that only people who have had a certain experience – say, for example, the experience of "living as a woman" or "living as a gay man" – can truthfully *speak to*, and *on behalf of*, those particular experiences. So to be able to say that we have sufficient authority to guarantee the truth of an experience means that we must believe that there is no interface between experience and language.

Now, if I were to start to recap this lecture, I would say that that even though Agamben *is* trying to argue that experience has lost its authority in modern life, in contrast it does seem that . . .

CONFIDENT VOICE FROM BACK OF HALL. Hang on, I'm slightly lost here. Because, from what you are saying, despite Agamben's claim that we can no longer have or communicate experience, as long as we picture experience as having an immediate relation to truth then there will always be attempts to valorize the representation and communication of experience as guaranteeing some sort of authentic knowledge?

LECTURER. [*Slightly impatiently, it's nearly time to get out of the room*] Yes.

CONFIDENT VOICE. [*Strident*] Which means that contrary to Agamben's protestations experience still *does* retain some degree of authority in the guise of authenticity, realness, immediacy, intuition, etc.

look at this ?!

LECTURER. Yes.

CONFIDENT VOICE. Well then, why is he so adamant that experience has no authority in contemporary life? I mean he's so withering. Look these are his words: "it is the character of the present time . . . that nobody would be inclined to accept the validity of an authority whose sole claim to legitimation was experience."[13]

LECTURER. [*Weary*] Well, if I could finish my sentence! This is what I was just about to say: that even though Agamben is trying to argue that experience has lost its authority in modern life, maybe it hasn't but rather it's just that it's not the kind of authority that Agamben envisaged! That is, that all along, Agamben is anticipating an authority which would constitute your experience *as* neutral, disinterested, impartial – a relation to the world which could make your trajectory through life feel more real, elevated, enduring, strong, certain . . . this is what he feels has been lost.

CONFIDENT VOICE. [*Hesitant*] Right?

LECTURER. But because the concept of experience has traditionally been recognized as a sensate, experimental, essentially emotive undergoing of the world, then experience in this interpretation is the antithesis of what you might want or expect from authority . . . which actually means that experience and authority enjoy somewhat contradictory relations to the world, especially if that authority continues to be conceptualized as mastery, certainty, truth etc. [*Getting to some end*] And that all along, the inability of Agamben to acknowledge this realization has obscured an important and challenging paradox: namely, "*no one* could wield sufficient authority to guarantee the truth of an experience" if it is "experience" itself which doubles back and undoes the concept of "authority."

CONFIDENT VOICE. Well, depending on how you interpret the concept of experience and authority – yes. So why do you think – as you've been suggesting – that given this realization there is still a conflation of experience and authority in the case of the "others"?

LECTURER: Well, let's look at this story.[14]

is the word in my ear text transmission noise?

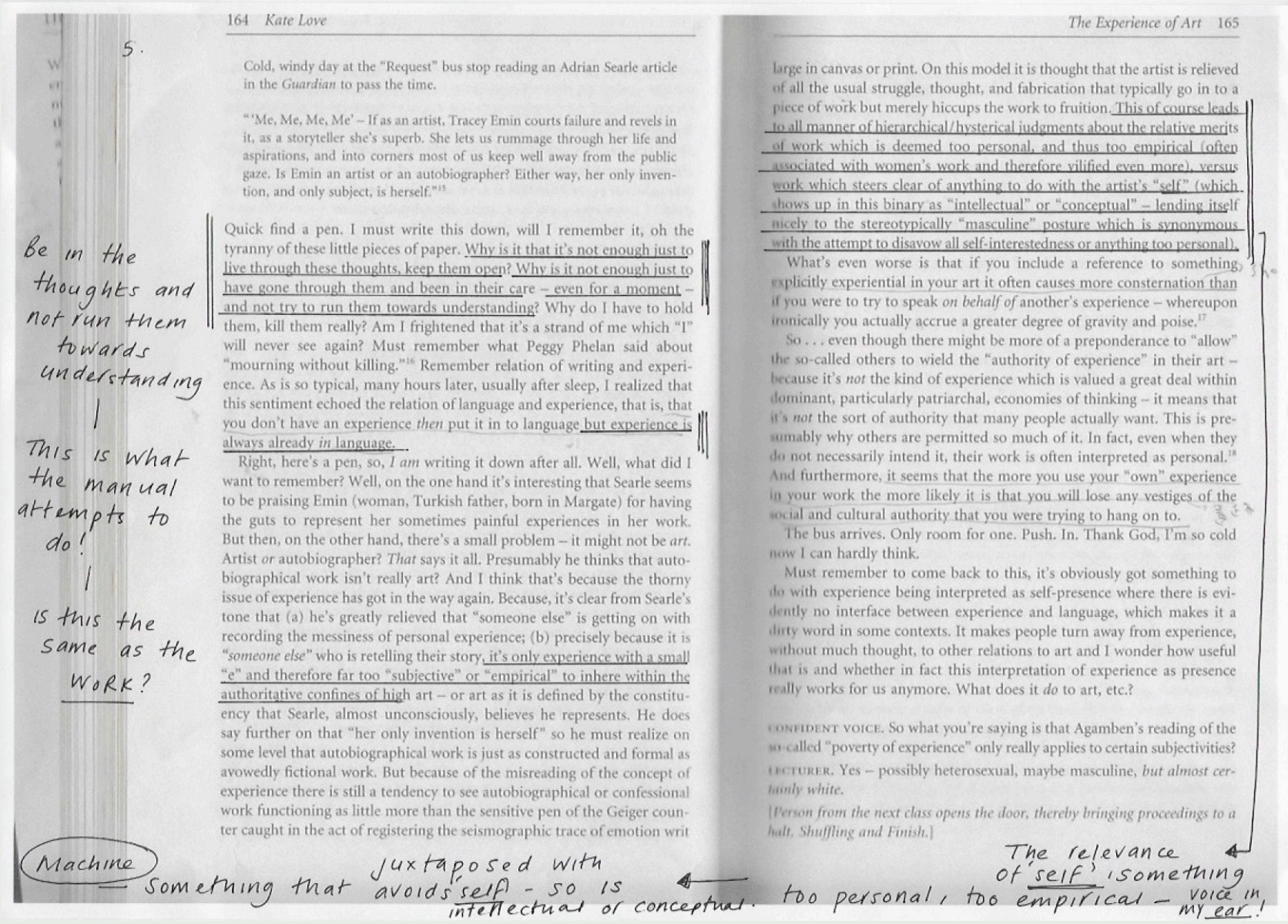

5.

Cold, windy day at the "Request" bus stop reading an Adrian Searle article in the *Guardian* to pass the time.

"'Me, Me, Me, Me' – If as an artist, Tracey Emin courts failure and revels in it, as a storyteller she's superb. She lets us rummage through her life and aspirations, and into corners most of us keep well away from the public gaze. Is Emin an artist or an autobiographer? Either way, her only invention, and only subject, is herself."[15]

Quick find a pen. I must write this down, will I remember it, oh the tyranny of these little pieces of paper. Why is it that it's not enough just to live through these thoughts, keep them open? Why is it not enough just to have gone through them and been in their care – even for a moment – and not try to run them towards understanding? Why do I have to hold them, kill them really? Am I frightened that it's a strand of me which "I" will never see again? Must remember what Peggy Phelan said about "mourning without killing."[16] Remember relation of writing and experience. As is so typical, many hours later, usually after sleep, I realized that this sentiment echoed the relation of language and experience, that is, that you don't have an experience *then* put it in to language but experience is always already *in* language.

Right, here's a pen, so, *I am* writing it down after all. Well, what did I want to remember? Well, on the one hand it's interesting that Searle seems to be praising Emin (woman, Turkish father, born in Margate) for having the guts to represent her sometimes painful experiences in her work. But then, on the other hand, there's a small problem – it might not be *art*. Artist *or* autobiographer? *That* says it all. Presumably he thinks that autobiographical work isn't really art? And I think that's because the thorny issue of experience has got in the way again. Because, it's clear from Searle's tone that (a) he's greatly relieved that "someone else" is getting on with recording the messiness of personal experience; (b) precisely because it is "*someone else*" who is retelling their story, it's only experience with a small "e" and therefore far too "subjective" or "empirical" to inhere within the authoritative confines of high art – or art as it is defined by the constituency that Searle, almost unconsciously, believes he represents. He does say further on that "her only invention is herself" so he must realize on some level that autobiographical work is just as constructed and formal as avowedly fictional work. But because of the misreading of the concept of experience there is still a tendency to see autobiographical or confessional work functioning as little more than the sensitive pen of the Geiger counter caught in the act of registering the seismographic trace of emotion writ

Be in the thoughts and not run them towards understanding

|

This is what the manual attempts to do!

|

Is this the same as the WORK?

large in canvas or print. On this model it is thought that the artist is relieved of all the usual struggle, thought, and fabrication that typically go in to a piece of work but merely hiccups the work to fruition. This of course leads to all manner of hierarchical/hysterical judgments about the relative merits of work which is deemed too personal, and thus too empirical (often associated with women's work and therefore vilified even more), versus work which steers clear of anything to do with the artist's "self" (which shows up in this binary as "intellectual" or "conceptual" – lending itself nicely to the stereotypically "masculine" posture which is synonymous with the attempt to disavow all self-interestedness or anything too personal).

What's even worse is that if you include a reference to something explicitly experiential in your art it often causes more consternation than if you were to try to speak *on behalf of* another's experience – whereupon ironically you actually accrue a greater degree of gravity and poise.[17]

So . . . even though there might be more of a preponderance to "allow" the so-called others to wield the "authority of experience" in their art – because it's *not* the kind of experience which is valued a great deal within dominant, particularly patriarchal, economies of thinking – it means that it's *not* the sort of authority that many people actually want. This is presumably why others are permitted so much of it. In fact, even when they do not necessarily intend it, their work is often interpreted as personal.[18] And furthermore, it seems that the more you use your "own" experience in your work the more likely it is that you will lose any vestiges of the social and cultural authority that you were trying to hang on to.

The bus arrives. Only room for one. Push. In. Thank God, I'm so cold now I can hardly think.

Must remember to come back to this, it's obviously got something to do with experience being interpreted as self-presence where there is evidently no interface between experience and language, which makes it a dirty word in some contexts. It makes people turn away from experience, without much thought, to other relations to art and I wonder how useful that is and whether in fact this interpretation of experience as presence really works for us anymore. What does it *do* to art, etc.?

CONFIDENT VOICE. So what you're saying is that Agamben's reading of the so-called "poverty of experience" only really applies to certain subjectivities?

LECTURER. Yes – possibly heterosexual, maybe masculine, *but almost certainly white.*

[*Person from the next class opens the door, thereby bringing proceedings to a halt. Shuffling and Finish.*]

Machine — Something that avoids self - so is juxtaposed with intellectual or conceptual.

The relevance of 'self' is something too personal, too empirical — voice in my ear!

Make

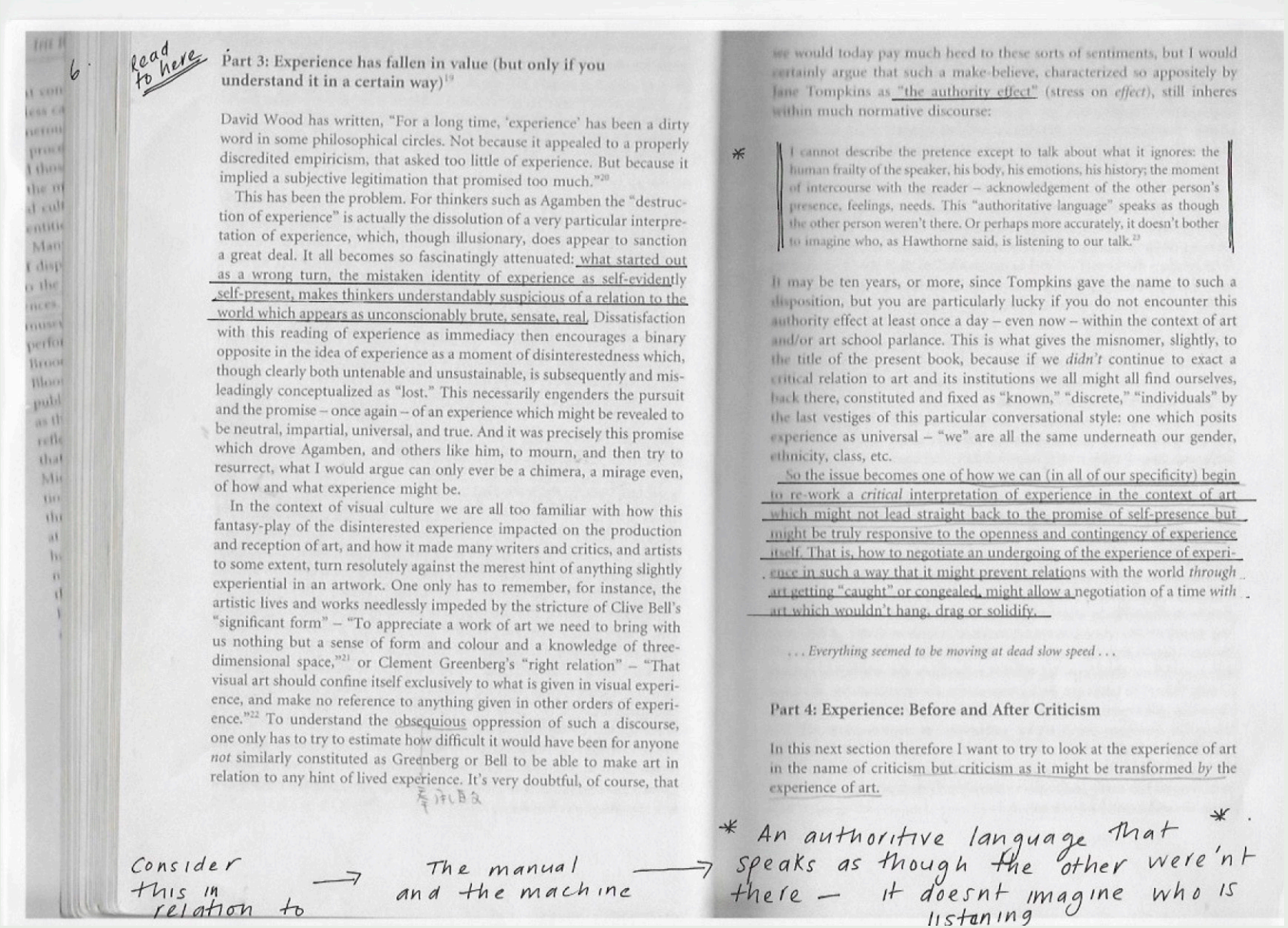

Read to here

6.

Part 3: Experience has fallen in value (but only if you understand it in a certain way)[19]

David Wood has written, "For a long time, 'experience' has been a dirty word in some philosophical circles. Not because it appealed to a properly discredited empiricism, that asked too little of experience. But because it implied a subjective legitimation that promised too much."[20]

This has been the problem. For thinkers such as Agamben the "destruction of experience" is actually the dissolution of a very particular interpretation of experience, which, though illusionary, does appear to sanction a great deal. It all becomes so fascinatingly attenuated: what started out as a wrong turn, the mistaken identity of experience as self-evidently self-present, makes thinkers understandably suspicious of a relation to the world which appears as unconscionably brute, sensate, real. Dissatisfaction with this reading of experience as immediacy then encourages a binary opposite in the idea of experience as a moment of disinterestedness which, though clearly both untenable and unsustainable, is subsequently and misleadingly conceptualized as "lost." This necessarily engenders the pursuit and the promise – once again – of an experience which might be revealed to be neutral, impartial, universal, and true. And it was precisely this promise which drove Agamben, and others like him, to mourn, and then try to resurrect, what I would argue can only ever be a chimera, a mirage even, of how and what experience might be.

In the context of visual culture we are all too familiar with how this fantasy-play of the disinterested experience impacted on the production and reception of art, and how it made many writers and critics, and artists to some extent, turn resolutely against the merest hint of anything slightly experiential in an artwork. One only has to remember, for instance, the artistic lives and works needlessly impeded by the stricture of Clive Bell's "significant form" – "To appreciate a work of art we need to bring with us nothing but a sense of form and colour and a knowledge of three-dimensional space,"[21] or Clement Greenberg's "right relation" – "That visual art should confine itself exclusively to what is given in visual experience, and make no reference to anything given in other orders of experience."[22] To understand the obsequious oppression of such a discourse, one only has to try to estimate how difficult it would have been for anyone *not* similarly constituted as Greenberg or Bell to be able to make art in relation to any hint of lived experience. It's very doubtful, of course, that

we would today pay much heed to these sorts of sentiments, but I would certainly argue that such a make-believe, characterized so appositely by Jane Tompkins as "the authority effect" (stress on *effect*), still inheres within much normative discourse:

* I cannot describe the pretence except to talk about what it ignores: the human frailty of the speaker, his body, his emotions, his history; the moment of intercourse with the reader – acknowledgement of the other person's presence, feelings, needs. This "authoritative language" speaks as though the other person weren't there. Or perhaps more accurately, it doesn't bother to imagine who, as Hawthorne said, is listening to our talk.[23]

It may be ten years, or more, since Tompkins gave the name to such a disposition, but you are particularly lucky if you do not encounter this authority effect at least once a day – even now – within the context of art and/or art school parlance. This is what gives the misnomer, slightly, to the title of the present book, because if we *didn't* continue to exact a critical relation to art and its institutions we all might all find ourselves, back there, constituted and fixed as "known," "discrete," "individuals" by the last vestiges of this particular conversational style: one which posits experience as universal – "we" are all the same underneath our gender, ethnicity, class, etc.

So the issue becomes one of how we can (in all of our specificity) begin to re-work a *critical* interpretation of experience in the context of art which might not lead straight back to the promise of self-presence but might be truly responsive to the openness and contingency of experience itself. That is, how to negotiate an undergoing of the experience of experience in such a way that it might prevent relations with the world *through* art getting "caught" or congealed, might allow a negotiation of a time *with* art which wouldn't hang, drag or solidify.

. . . Everything seemed to be moving at dead slow speed . . .

Part 4: Experience: Before and After Criticism

In this next section therefore I want to try to look at the experience of art in the name of criticism but criticism as it might be transformed *by* the experience of art.

Consider this in relation to → The manual and the machine →

* An authoritive language that speaks as though the other were'nt there – it doesnt imagine who is listening *

My starting point would be that if a more productive interpretation of experience with art might be usefully understood "*After* Criticism," then it's possibly a case of articulating the "after," in the title, in its adverbial sense, that is, "in honor of," or "in recognition of" criticism (proper criticism), because to have an experience with art *after* criticism in terms of "beyond" or "finished with" might only seek to court the crazy promise of "neutral experience" and its disinterested subject once again.

I was recently reminded of these sorts of dangers – of flirting with the idea of positing oneself *after* criticism – when I came across a book by David Levin.[24] In *The Opening of Vision* (1988) he makes the distinction between two predominant postmodern visual modes – the Assertoric and the Aletheic – the former defined as a gaze which is abstracted, monocular, inflexible, unmoving, rigid, ego-logical, and exclusionary and the latter as multiple, aware of its context, inclusionary, horizontal, and caring. The memory of the tyranny of the Assertoric gaze – particularly in the late 1970s in English art schools – sent shudders down my spine, remembering as I did that it was the intractability of such a view which was, of course, one of the primary reasons for the development and efficacy of *critical theory* in art schools in the first place.

I want to argue, though, that, important and liberating as that first wave of criticism was – particularly the influence of deconstruction on the understanding of subjectivity, responsibility, and agency in art practice – structurally, critical discourse had a very contradictory response to the interpretation of experience, both in terms of the experience of art and the representation of personal experience *in* art. A tension still exists today on a common-sense, if not more rigorously philosophical level – witness the recent publication of Sir Nicholas Serota's introductory book to the new Tate Modern Gallery, *Experience or Interpretation* (my emphasis).[25] It seems as if, in the first instance, the pressures to develop a more critically contingent analysis drove the conventional understanding of experience (which had somehow now become synonymous with universalism) in two conflicting ways. Either experience was conflated with authentic knowledge[26] which, as I have already noted, tended to position the relation as outside of and "other" to language, *or*, in response to the improbability of such a model, the argument was made that experience must therefore be always already *in* language, for it to be understood *as* experience at all. The problem with both of these models, and in particular the latter, was that the import of how it is to actually *experience* the world, and the art that is in it, was all too easily reduced in critical analysis to entirely an issue of linguistic and textual interpretation.

Obviously, neither of these models seems quite adequate to the job, which is why calls are now being made for a much more performative inquiry into the experiential affects of art and why this text is a response to that request. However, in answering that call I should say here that I do not believe that a truly performative relation to art can ever be properly felt, or enacted, if we persist with either of the above models of experience – that is, where the sensual, affecting, bodily *and* cognitive moment that is experience is seen as either outside of or as entirely collapsed to language. Both of these models *fix* and hold down experiences of art – *this* is *that* – the very opposite of what performative work should be attempting to do with what William James has called "the buzzing confusion of things" that can be the apprehension of the visual arts.

My argument would be that interpretations of the concept of experience will only be able to move forward (or go back, *pace* Agamben) if they can manage to retain some sort of estimation of what actually *experiencing* something feels like, in contrast, say, to the feeling of *understanding* or *knowing* something. And one way of moving on might be to think about the work that the word experience *does* – as in, for example, "I've just had this fantastic/dreadful experience," etc., etc. Because if I think back to when I've said "I've had an experience" (such as the one outlined below) I realize that I have probably used the word because I want to register the precise feeling that *that* which I have just lived through was something like an approach to the world which I *both* recognized, and yet didn't *quite* recognize, a space which was both in language but yet *not quite* in language, at the limit of language but unequivocally not *beyond*. I wouldn't have used the word understanding to describe such a moment because, unlike experience, which is mobile and fluid, understanding is synonymous with the feeling of being within the fold of language – positioned or placed by what you know. In actual fact it is as if the word experience has *chosen me*, because it is the palpability of the experience itself – in taking me to the margins or limits of what I know in any precise or exactingly demarcated sense – which has made me realize that this was a moment or an encounter that I would *have* to call an experience rather than an interpretation or another way of *knowing*.

My suggestion would be therefore that maybe when you say you have had an experience it simply means that such an encounter with the world has obliged you to recognize that what you have just lived through (as an experience) was in some way an experience of a negotiation *with* language – or that there is language[27] – a feeling which corresponds to the openness of experience that is made possible by experience itself. And whilst it is

1.

*

This is important

How does this happen?

What does this mean to the manual?

I dont want the manual to be an interpretation.

inclusionary
horizontal
caring

Make

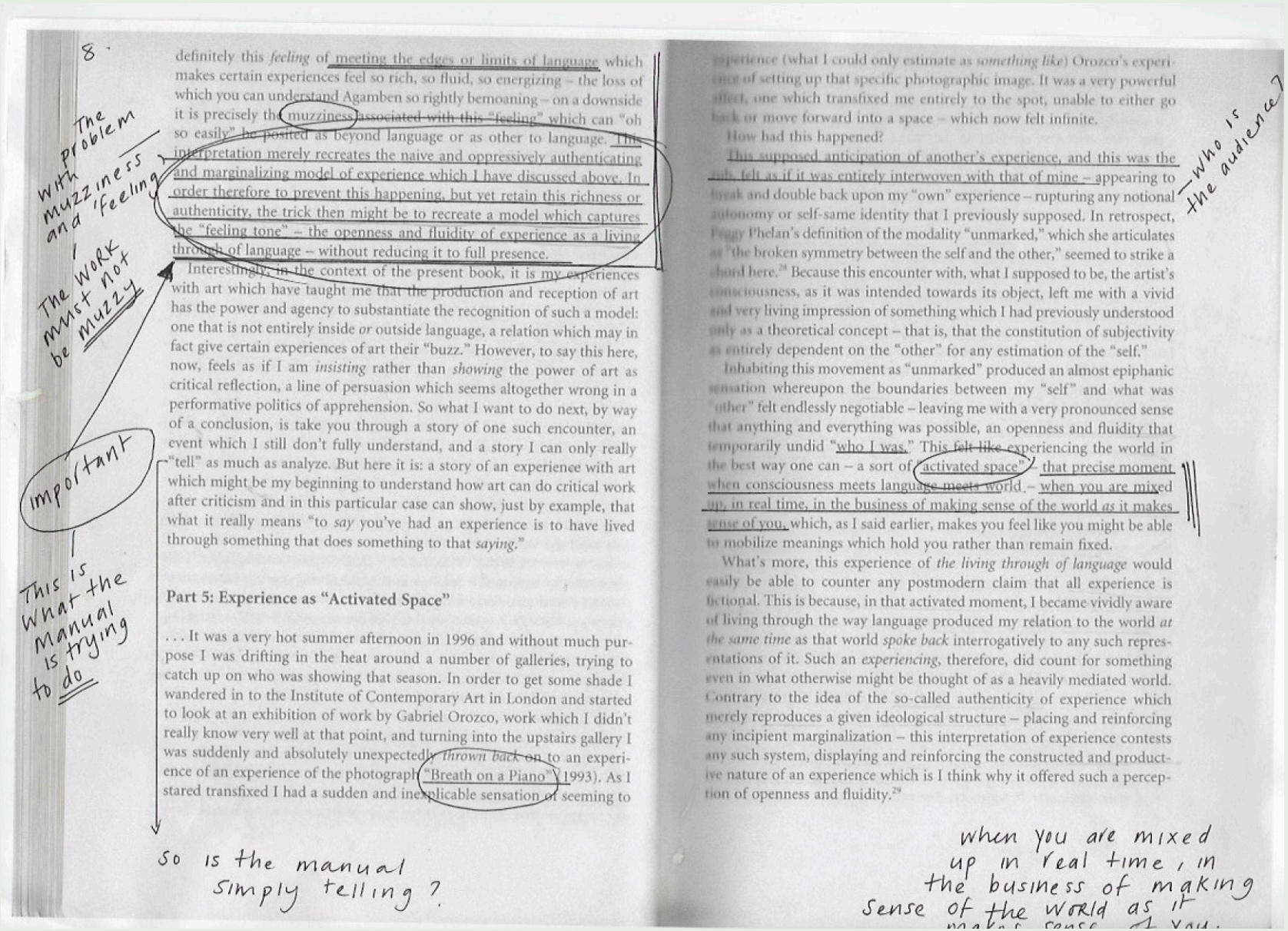

8.

definitely this *feeling* of meeting the edges or limits of language which makes certain experiences feel so rich, so fluid, so energizing – the loss of which you can understand Agamben so rightly bemoaning – on a downside it is precisely the muzziness associated with this "feeling" which can "oh so easily" be posited as beyond language or as other to language. This interpretation merely recreates the naive and oppressively authenticating and marginalizing model of experience which I have discussed above. In order therefore to prevent this happening, but yet retain this richness or authenticity, the trick then might be to recreate a model which captures the "feeling tone" – the openness and fluidity of experience as a living through of language – without reducing it to full presence.

Interestingly, in the context of the present book, it is my experiences with art which have taught me that the production and reception of art has the power and agency to substantiate the recognition of such a model: one that is not entirely inside *or* outside language, a relation which may in fact give certain experiences of art their "buzz." However, to say this here, now, feels as if I am *insisting* rather than *showing* the power of art as critical reflection, a line of persuasion which seems altogether wrong in a performative politics of apprehension. So what I want to do next, by way of a conclusion, is take you through a story of one such encounter, an event which I still don't fully understand, and a story I can only really "tell" as much as analyze. But here it is: a story of an experience with art which might be my beginning to understand how art can do critical work after criticism and in this particular case can show, just by example, that what it really means "to *say* you've had an experience is to have lived through something that does something to that *saying*."

Part 5: Experience as "Activated Space"

. . . It was a very hot summer afternoon in 1996 and without much purpose I was drifting in the heat around a number of galleries, trying to catch up on who was showing that season. In order to get some shade I wandered in to the Institute of Contemporary Art in London and started to look at an exhibition of work by Gabriel Orozco, work which I didn't really know very well at that point, and turning into the upstairs gallery I was suddenly and absolutely unexpectedly *thrown back* on to an experience of an experience of the photograph "Breath on a Piano" (1993). As I stared transfixed I had a sudden and inexplicable sensation of seeming to

experience (what I could only estimate as *something like*) Orozco's experience of setting up that specific photographic image. It was a very powerful effect, one which transfixed me entirely to the spot, unable to either go back or move forward into a space – which now felt infinite.

How had this happened?

This supposed anticipation of another's experience, and this was the rub, felt as if it was entirely interwoven with that of mine – appearing to break and double back upon my "own" experience – rupturing any notional autonomy or self-same identity that I previously supposed. In retrospect, Peggy Phelan's definition of the modality "unmarked," which she articulates as "the broken symmetry between the self and the other," seemed to strike a chord here.[28] Because this encounter with, what I supposed to be, the artist's consciousness, as it was intended towards its object, left me with a vivid and very living impression of something which I had previously understood only as a theoretical concept – that is, that the constitution of subjectivity as entirely dependent on the "other" for any estimation of the "self."

Inhabiting this movement as "unmarked" produced an almost epiphanic sensation whereupon the boundaries between my "self" and what was "other" felt endlessly negotiable – leaving me with a very pronounced sense that anything and everything was possible, an openness and fluidity that temporarily undid "who I was." This felt like experiencing the world in the best way one can – a sort of "activated space" – that precise moment when consciousness meets language meets world – when you are mixed up, in real time, in the business of making sense of the world *as* it makes sense of you, which, as I said earlier, makes you feel like you might be able to mobilize meanings which hold you rather than remain fixed.

What's more, this experience of *the living through of language* would easily be able to counter any postmodern claim that all experience is fictional. This is because, in that activated moment, I became vividly aware of living through the way language produced my relation to the world *at the same time* as that world *spoke back* interrogatively to any such representations of it. Such an *experiencing*, therefore, did count for something even in what otherwise might be thought of as a heavily mediated world. Contrary to the idea of the so-called authenticity of experience which merely reproduces a given ideological structure – placing and reinforcing any incipient marginalization – this interpretation of experience contests any such system, displaying and reinforcing the constructed and productive nature of an experience which is I think why it offered such a perception of openness and fluidity.[29]

The problem with muzziness and 'feeling'

The work must not be muzzy

important

This is what the manual is trying to do

Who is the audience?

So is the manual simply telling?

when you are mixed up in real time, in the business of making sense of the world as it

9.

What has subsequently become interesting to me is that the overwhelming palpability of this momentary shock or dissembling of what I would now have to call "my" subjectivity *could* have lent itself very effectively to the conventional characterization of experience as a sensate or bodily, rather than cognitive, relation to the world; an event which we would normally recognize as taking place entirely *outside* of language and signification.[30] However, what prevented me from just walking away with this thought was the equally powerful recognition that such a split or division could not have occurred if I had stepped outside of language and signification into an area exclusively inhabited as sensation and affect (in the old disinterested sense) because I would not have been able to *recognize* the import of the affect. Rather, the palpability of such a feeling was probably instituted as a consequence of reaching what could only be described as *the limits* of an "easy" or "normative" relation within signification: the penumbra of subjectivity that actually might be called experience. This limit announces itself as a difficulty or as a disruption – a definite sense of being in negotiation with the rustle of language or with the relations of sense which bind you – where what one might be attempting to make sense of is not easily assimilable or placed.[31]

As I said at the beginning of this section, maybe this story encapsulates a touch of what "after criticism" might actually be like in terms of a new kind of work. That is, no longer having to think in terms of ideas that are somehow buried underneath or behind art – which an old-fashioned criticism heroically unearthed. But rather, that art can now do "the reading." By which I mean that – like my moment with Orozco's photograph – it might be possible to begin to analyze the world through and against the concepts of experience that the work of art, *itself*, tends to produce. That is, to redefine the notion of art as a mode of analysis whereby knowledges and ideas could be extracted from the process of making art, thereby enabling both the maker and the viewer to tune in to the sorts of thinking or approaches to the world that the apprehension of art itself makes you do. And to this end, it seemed as if this encounter with the photograph "Breath on Piano," unlike other forms of more conventional analysis, had the power to act as an understanding of experience as it might wish to be interpreted, but is in fact very rarely conceptualized: as open and fluid, rather than fixed and self-present – where *the limit* rather than the subject is posited as the source or "origin" of any such experience. And maybe this is the nearest I can come to understanding the promise of the authority of experience, which Agamben lamented. For maybe it is only when

The edge of a shadow

My experience / The viewers experience / The readers experience / ?

are enabled to experience the world as a living through of language (which art enables so well) that we can begin to articulate both an adequate conceptual model of what it *feels* like to experience but also, probably more properly, to *live* those experiences as unbounded and vibrant . . .

as moving rather than dead slow . . .

"But I'm afraid that it's a word that involves time and the perception of something . . . especially when language is happening through space and time; not only a word on a wall, or in a closed book. 'Space' happens when the sign is moving in life, or when the language is in action and when the spectator, the activator of the sign enacts these relations in which knowledge, passion, sign, language, perception, sexuality, intervene. That is when space starts to be perceived in a more comprehensive, more total way. When you are in front of something that just covers all your attention, you generate that space and you are experiencing the world in a total way; that's perhaps the space that contemporary sculpture, and maybe in art in general, tries to generate."[32]

But I wasn't there to hear: because I was in quite another space altogether. Like all amazing experiences with the openness of art – it had given me the confidence to feel (and make) in my own way . . . *

This has given me the confidence to feel

Notes

1 Gabriel Orozco in conversation with Benjamin Buchloh, in *Clinton is Innocent*, catalog to Orozco's exhibition at the Musée d'Art Moderne de la Ville de Paris (Paris, September 1998), p. 43.
2 Giorgio Agamben, *Infancy and History: Essays on the Destruction of Experience*, trans. Liz Heron (London and New York: Verso, 1993), p. 14.
3 Ibid.
4 Ibid.
5 Roland Barthes, *The Rustle of Language*, trans. Richard Howard (Berkeley and Los Angeles: University of California Press, 1989), p. 360.
6 Agamben, *Infancy and History*, p. 14.
7 Ibid.
8 Ibid., p. 15.
9 For an overview of responses to Derrida's pronouncement see Alice Jardine and Paul Smith (eds), *Men in Feminism* (London and New York: Methuen, 1987).
10 At the end of Andrew Benjamin and Peter Osborne's book, *Walter Benjamin's Philosophy: Destruction and Experience* (London: Clinamen Press, 2000),

*

Think this through in relation to the manual.

Does the manual make explicit that tuning in?

Make

Osborne, comparing a cross-section of interpretations of Benjamin, singles out Howard Cagill's *Walter Benjamin: The Colour of Experience* (London and New York: Routledge, 1998). He asserts that "[t]he advantage of [Caygill's] approach is that it situates Benjamin's *oeuvre* in the mainstream of nineteenth- and twentieth-century European philosophy as an invasion and ruin of philosophy by experience. (As Caygill comments nicely on Benjamin's essay on Naples: 'the Neapolitan staircase walks all over the *Critique of Pure Reason*, disobeying all the rules which would qualify it to be an object of a possible experience')" (p. 297). As I understand it, the logic of Osborne's statement presupposes that the category of experience *can* be thought of as other to philosophy, and therefore that experience *can also* be interpreted as standing *apart* from philosophy, and in a sense *must* do if it is to be able to bring about philosophy's ruin. It also appears to follow from this assertion that Osborne takes as a given the interpretation of experience as a self-presenting state – whereas philosophy, in this binary, is subsequently posited in contrast to experience as inevitably caught up in the categories of conceptual and linguistic determination.

11 By trying to suggest that he could "write as (a) woman" Derrida was attempting to undermine the fixity of biologically determined gender identity by implying that if gender was historically and culturally constructed then both "men" and "women" could inhabit and appropriate the structural relations typically associated with these gendered subject positions.

12 Terry Eagleton, *The Illusions of Postmodernism* (Oxford: Blackwell, 1996), p. 67.

13 Agamben, *Infancy and History*, p. 14.

14 "What enchants me: my experiences in buses. I think that writing serves also to do this: to collect what Joyce called epiphanies. Moments where reality, in its most modest form, joins in a single stroke a possibility and a promise of eternity – an instant that resists death": Hélène Cixous and Mireille Calle-Gruber (eds), *Rootprints: Memory and Life Writing* (London and New York: Routledge, 1997), p. 98.

15 Adrian Searle, "Me, Me, Me, Me," *The Guardian* (London) Tuesday, April 22, 1997, p. 13.

16 Peggy Phelan and Jill Lane (eds), *The Ends of Performance* (New York: New York University Press, 1998), p. 11.

17 I am thinking here of the difference in the way Tracey Emin's and Richard Billingham's work is received.

18 I am thinking here, for example, of the early 1990s feminist re-visioning of the concept of the "personal" in which writers such as Nancy K. Miller deliberately eschewed definitions of the personal *as* overtly confessional in favor of what she termed "life-writing," which strategically acknowledged its positionality in terms of its relation to the *other*. However, such work was frequently subjected to a postmodern version of "aspect-blindness" in the

sense that, despite its intentions, it was typically misinterpreted as "embarrassingly personal" in the traditional sense, even when nothing explicitly personal was included or else its *positional* status was simply occluded. See Nancy K. Miller, *Getting Personal* (London and New York: Routledge, 1991).

19 "More and more often there is embarrassment all around when the wish to hear a story is expressed. It is as if something that seemed inalienable to us, the securest amongst our possessions, were taken away from us: the ability to exchange experiences. One reason for this phenomenon is obvious: experience has fallen in value": Walter Benjamin, "The Storyteller," in *Illuminations*, trans. Harry Zohn (Glasgow: Fontana, 1973), p. 83.

20 David Wood, speaking at the "Understanding Experience" conference, ICA, London, November 1999.

21 Clive Bell, "The Aesthetic Hypothesis," in *Art* (London: Chatto and Windus, 1914), p. 10.

22 Clement Greenberg, "Modernist Painting" (1965), in Francis Frascina and Charles Harrison (eds), *Modern Art & Modernism: A Critical Anthology* (London: Open University, 1982), p. 8.

23 Jane Tompkins, "Me & My Shadow," in *Gender & Theory* (Oxford: Blackwell, 1989), p. 129.

24 David Levin, *The Opening of Vision: Nihilism and the Postmodern Situation* (New York: Routledge, 1988), p. 68.

25 Nicholas Serota, *Experience or Interpretation: The Dilemma of Museums of Modern Art* (London and New York: Thames and Hudson, 1996).

26 This is the model of experience as self-presence, which, as I have shown above, was already firmly in place but only articulated (and consequently strengthened) as such by the advent of critical theory.

27 Christopher Fynsk, *Language & Relation . . . That There Is Language* (Stanford, CA: Stanford University Press, 1996), p. 13.

28 Peggy Phelan, *Unmarked: The Politics of Performance* (London and New York: Routledge, 1993), pp. 6–7.

29 Joan W. Scott has written, "Experience is at once *always already* an interpretation *and* something that needs to be interpreted. What counts as experience is neither self-evident nor straight-forward; it is always contested and always therefore political": "The Evidence of Experience," in Henry Abelove, Michele Aina Barale, and David M. Halperin (eds), *The Lesbian and Gay Studies Reader* (New York and London: Routledge, 1993): 412.

30 I have used the word shock because my reaction was sudden. However, the feeling was more akin to an attenuated sense of muzziness – when the boundaries between self and other appear to be endlessly negotiable.

31 ". . . a language which doesn't allow itself to curdle like milk": Barthes, *The Rustle of Language*, p. 76.

32 Gabriel Orozco in conversation with Benjamin Buchloh: *Clinton is Innocent*, p. 45.

Look up this interview

Make

Robert Morris
Box with the Sound of Its Own Making, 1961

Wood, internal speaker, 7” cassette of ¼” tape, 1999; artist provided Digital Audio Tapes (D.A.T), 2011;
digital copy of D.A.T tapes. TRT 3.5 hours. Wooden Cube: 24.8 x 24.8 x 24.8cm
Sound Box, [online] Available from: https://www.youtube.com/watch?v=_nrTxgLaXTQ (accessed 01/04/2018)

Make

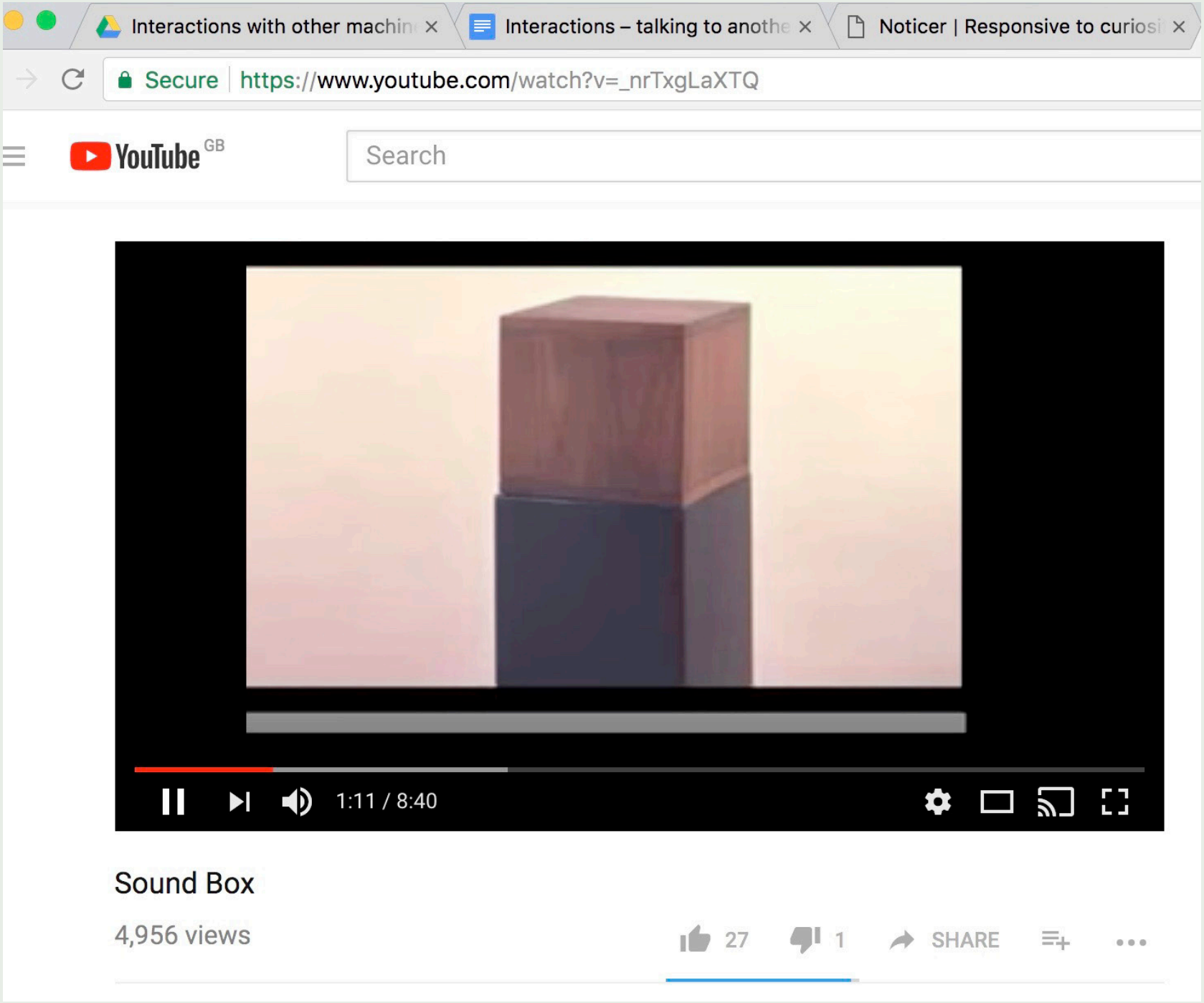
Interactions with other machin
Interactions – talking to anothe
Noticer | Responsive to curiosi
Secure
https://www.youtube.com/watch?v=_nrTxgLaXTQ
YouTube GB
Search
1:11 / 8:40
Sound Box
4,956 views
27
1
SHARE

Make

Hamilton, A. *Making Not Knowing in* **Jacob, M. J and Baas, J (2010) Learning Mind: Experience into Art, Chicago, Ill. : Berkeley, University of** California Press, p67 - 73

MAKING NOT KNOWING

In this ongoing, unfinished story of all possible future-making, students hold the potential for a lot of future. That makes me feel optimistic and grateful, though I don't think this is an optimistic time. When I am asked to speak to students, the question arises: What is speaking? What *is* this orphic machine of the mouth, opening and closing to make sounds, vowels, and consonants, of letters filling into words, and on down the road into sentences and meanings? And looming even larger, in a haunting sort of way: What is being said? What are the forms and possibilities of saying? I think about the space of someone speaking and someone listening—a situation of response. I begin to think about words: What can words do? How can words be acts of making? And I begin to ask myself: What words need to be said now? What can words say now? Through what process might I find words that are up to the task of all the things that need saying now, when cultures fight cultures, when invention and reciprocity seem on the decline, when listening hasn't kept pace with speaking? As a maker, more comfortable with a line of thread than a line of writing, I begin to wonder how words might become the material of my making.

I recently learned to speak a short text in classical Arabic and French. This act of learning brought me to thinking about how our mouths, like other parts of our bodies, form muscle memories; how the sounds that shape the words we unconsciously make every day are formed, over and over again, by the way the tongue pushes against the front of the mouth or retracts to let a particular sound form: the repetitions, a thousand times a day, of these subtle formings in the mouth's hollow cavity, this orifice which is a place formed internally by use. And I began to think about how learning another language—before it is about learning grammar and vocabulary and syntax, before it is about gaining an entirely new set of metaphor-making possibilities—is, first, a newly acquired muscle memory of the mouth. To learn another language is to re-form the shape habits of one's speaking, to take on those of another; to take on another's language is to take on another culture and all

learning Another Langage

Is this true? Is culture implicit?

the accumulations of its history into the body. One is touched, and in being touched, one is changed. Then empathy and understanding have a chance.

In entering the dense, layered challenges of translation—of one language to another language, of one body to another—in finding these newly forming sounds coming from my body, I began to think about what a small percentage of poetry and fiction published in my country is translated from other languages. Salman Rushdie wrote:

> *It has perhaps never been more important for the world's voices to be heard in America, never more important for the world's ideas and dreams to be known and thought about and discussed, never more important for a global dialogue to be fostered. [Never more important] to believe in . . . art as the proper counterweight to power, and to see . . . art as a lofty, transnational, transcultural force that, in [Saul] Bellow's great formulation, "open[s] the universe a little more."*[1]

Not always a counterweight? It also excludes! exploits

This celebration of art as the "proper" counterweight to power implies responsibility, a responsibility that comes with the artist's power to exercise a free imagination.

So I began thinking about the situations we have made for public speaking, opportunities to speak together, to speak in unison, contexts that aren't professionalized. Where does this speaking happen? What does it sound like? What is being said? You can hear a unison voice in a political rally; you can hear this voice in church, but where else? I didn't come up with much, and I began to think about how our first accountability is tied to the way we exercise the actions of our voices. How might we find a way to speak together, to be a chorus of speakers summoning together a need to *say*? And I tried to imagine what that space might be, and what might be said.

This relates to text in 'In site of conversation'

One doesn't arrive—in words or in art—by necessarily knowing where one is going. In every work of art something appears that does not previously exist, and so, by default, you work from what you know to what you don't know. You may set out for New York, but you may find yourself, as I did, in Ohio. You may set out to make a sculpture and find that time is your material. You may pick up a paintbrush and find that your making is not on canvas or wood but in relations between people. You may set out to walk across the room, but getting to what is on the other side might take ten years. You have to be open to all possibilities and to all routes—circuitous or otherwise.

Is this why the manual works backwards?

But not knowing, waiting and finding—though they may happen accidentally—aren't accidents. They involve work and research. Not knowing isn't ignorance. (Fear springs from ignorance.) Not knowing is a permissive and rigorous willing-

1. Salman Rushdie, "The Pen and the Sword," *New York Times Book Review*, April 17, 2005; http://www.nytimes.com. In the original essay Rushdie uses the term "literary art" as opposed to the term "art."



ness to trust, leaving knowing in suspension, trusting in possibility without result, regarding as possible all manner of response. For the responsibility of the artist, as Gertrude Stein has said, is neither historical narrative nor descriptive mimesis but immediate engagement and response: "each of us in our own way is bound to express what the world in which we are living is doing."[2] Our task is the practice of recognizing.

We honor this practice of art—of a life of making. A life of making isn't a series of shows, or projects, or productions, or things; it is an everyday practice. It is a practice of questions more than of answers, of waiting to find what you need more often than knowing what you need to do. Waiting, like listening and meandering, is best when it is an active and not a passive state; it is helpful to know that "wait" and "hope" share the same root in Spanish, and to remember that *not* acting can also be

2. Gertrude Stein, "Portraits and Repetition," in *Lectures in America* (1935; New York: Virago, 1985), 176–77.

To not act is important to not take part.

The Behaviours around the production of an object

This is not all about production

Ann Hamilton and Meredith Monk, *Songs of Ascension*, 2007



Ann Hamilton and Meredith Monk, *Songs of Ascension*, 2007

an action, as in the story of Charmaine Means, who refused direct orders to shut down the TV station in Mossul, Iraq, on the grounds that she was not in the army to suppress freedom of speech.[3]

I asked my ten-year-old son, Emmett, what he thought art was for and he said, "Nothing." He said, "It isn't good for anything." And as he saw my eyes roll back in my head, thinking, this is what you get from a kid whose parents are both artists, he quickly added, "Art just is." He said "Art just is" with an assumption that, like breakfast on the table, it will always be there—a given of culture. In my head, I could hear a voice saying in response to his confidence, "Yes, *but* . . ." Can I really believe, like Rushdie, that all the collective acts of making carry a weight that can counter the acts of unmaking that accrue daily? For acts of making to be acts of resistance and tools for remembering, this given-ness has to be made and maintained, and to have room made for it.

Our culture has always beheld with suspicion unproductive time, things not utilitarian, and daydreaming in general, but we live in a time when it is especially challenging to articulate the importance of experiences that don't produce anything

3. Charlie Thomas, "US Army Major Refuses Order to Seize Iraq TV Station," *Asheville Global Report*, no. 226 (2003).

The relevance to → teaching

The artschool - production/

To be busy ?

To evidence production?

The value / of unproductive time?

obvious, aren't easily quantifiable, resist measurement, aren't easily named, are categorically in-between. Peter Sellars gave a talk in London entitled "The Culture of Democracy," in which he reminded his audience that, in Plato's *Dialogues*, truth exists not on one side or the other but in between. "When two people are talking, when two groups are engaging, the truth is present but is owned by neither."[4]

So, if our great inheritance from classical Greece is truth that is made present not from monologue but through dialogue, we have part of the answer to our question: What is art for? Sellars spoke, too, of how the Greeks created an entire culture to make spoken dialogue possible. He noted that the first step in democracy is to learn to listen, and that Greek theaters were giant ears carved into the sides of mountains. He spoke of how most Greek choruses were made up of foreigners. So Greek theater gathered everyone in one place, into a giant ear to listen—"let's hear what they have to say . . . let's hear what the old people have to say, the young people, the people we never hear from."[5] Greek theater was a place where what was not allowed to be spoken in public *was* spoken. How? It was spoken in visual art, in dance, in music, and in poetry. Where is that place now? To leave Greece and come forward to now, this question seems important to what Emmett's answer, "Art just is," could mean, how it might be recognized.

Every act of making matters. *How* we make matters. I like to remember, and remark with regularity, that the word "making" occupies seventeen pages in the *Oxford English Dictionary*, so there are multiple possibilities for a lifetime of making: make a cup, a conversation, a building, an institution; make memory, make peace, make a poem, a song, a drawing, a play; make a metaphor that changes, enlarges, or inverts the way we understand or see something. Make something to change your mind—acts that amplify.

Remember the butterfly effect—the flap of a wing on one continent changing the weather on another? That is how a metaphor travels: the initial act may be small, but it can change things. We have the butterfly effect because scientists found that the minutest variations—almost undetectable phenomena, things hardly registering—can cause entirely different weather patterns to emerge.

Ann Lauterbach, poet, essayist, and writer, remarks in her book *The Night Sky*:

> *Imaginative work is grounded in thinking about and thinking through the immediacy of events both private and public, in order to draw from them objects, materials rendered into forms that bring us closer to our sense of connection, our personal agency. Art asks to be interpreted not just consumed; it asks us to suspend our judgment while we engage our senses. Art is a language which anneals individuals to each other through experiences that are uniquely human, that*

4. Proms Lecture given on August 3, 2003, at the Victoria and Albert Museum Lecture Theater, London. Published as "The Culture of Democracy" in *Grantmakers in the Arts Reader* 15, no. 1 (Winter 2004): 7–10.

5. Ibid.

6. Ann Lauterbach, *The Night Sky: Writings on the Poetics of Experience* (Toronto: Viking Adult, 2005), 248.

7. Jonathan Schell, *The Unconquerable World: Power, Nonviolence, and the Will of the People* (New York: Henry Holt, 2003).

8. These thoughts are given permission by Rebecca Solnit's book *Hope in the Dark: Untold Histories, Wild Possibilities* (New York: Nation Books, 2004).

9. Nadine Gordimer, *The Essential Gesture: Writing, Politics and Places*, ed. Stephen Clingman (London: Jonathan Cape, 1988), 277.

demand connection at the level of making meaning. If we lose our ability to make meaning—that is to interpret, to find form in the raw materials of life—then we stand in danger of having meaning made for us, a rupture between what is said and what is done, between false intentions and disastrous consequences.[6]

A key recognition in Jonathan Schell's book, *The Unconquerable World: Power, Nonviolence, and the Will of the People,* is that the change that counts in revolution takes place first in the imagination.[7] This foundational change, the one from which all else issues, is the hardest to track. Sometimes change gathers over five years, over a generation, and then finally the wall comes down or a country is formed. But before the wall comes down, there are symbolic and cultural acts, uncountable small acts, that can shift the world, make political power, spread ideas, shape imaginations. That is what art is for—it is to remind us of our power to make the world.[8]



Some of my own makings as an artist have met with initial resistance from my son. A few years ago, when I wanted to think about the relationship between vision and language, I made a series of pinhole cameras that I could set into the hollow interior of my mouth in order to make the mouth opening a way of seeing rather than a way of saying. At first my son said, "I hate it, Mom, when you do these weird things." But then, in time, a little more proudly, I heard him say in an aside to a friend, "My mom takes pictures with her mouth." The conflation of speech and vision had registered in his imagination. It isn't necessarily the objects of art in their many forms that we are here to support, it is the possibility of art, the question of art, the place it makes in the culture for those acts which "just are" and, in their being just for the sake of themselves, can open worlds in which we might listen differently.

All things are possible. According to Nadine Gordimer: "The people know what to do before the leaders."[9] I would add that perhaps it is the task of artists to know before the people. It is the task of the artist to make material form, to give it presence, to

isnt this in opposition to interpretation then?

'not running towards explanation' Kate Love?

heir ache?



make it social; it is the task of the artist to lead the leaders by staying at the threshold; to be an unsettler in the tradition of Ralph Waldo Emerson, one of our first public tricksters. "Let me remind the reader that I am only an experimenter. Do not set the least value on what I do, or the least discredit on what I do not, as if I pretended to settle any thing as true or false. I unsettle all things. No facts are to me sacred; none are profane; I simply experiment, an endless seeker with no past."[10]

10. Ralph Waldo Emerson, *Essays and English Traits*, ed. Charles W. Eliot (New York: P.F. Collier, 1909), 164.

Why is he called a trickster?

seems undermining.

"To unsettle all things"

some things need to settle!

Ann Hamilton and Meredith Monk, *Songs of Ascension*, 2007

Listen to Tim Ingold's Lecture *Matter Over Mind, Mind Over Matter* 2012 and audio record in the studio while making four panels. The panels are 45cm x 45cm. Cover with canvas to form pockets. Use the Jefferson System of transcription notation to document the lecture interrupted with the sounds of making.

18 April 2018 (Transcribing in progress)

.hhhh for er:m several years now I (.) have been teaching a course to final year undergraduate students in (.) Anthropology at the (.) University of Aberdeen. The course is called (.) the four A:::s er anthropology, archeology, art and architecture and (.) part of what I have been trying to do in this course is t-t-to mix the usual things of having lectures and seminars and discussing and reading with practical activities that speak to the issues that we have been talking about. .hhh:::so I want to begin with an experiment that I carried out along with the students in the very first week of this course. <I should explain that> every student on the course has to pick a particular →site or a thing er:m like a fountain or a statue or a prominent building or a stone circle and (.) they are asked to visit that →thing every week to →attend to certain aspects of it. They are asked to attend to it <take photographs, make notes, a model and hand in a dossier → (crumpling polythene sheet) at the end of the course>. →STAPLING (.2) STAPLING (.2) STAPLING (.2) so for this experiment I asked the students to gather a selection of ↑objects that they had found lying around the things that they had chosen for their projects. .hhhh

(let me see if I can work this) (0.3) so they arrived with an assortment of ↑odds and ↑ends, there were <coins, paper clips, drinks cans, cigarette butts, a rubber ball, the feather of a seagull and much else besides>. First we ↑deposited all the stuff they had brought in a heap in the middle of the floor. We looked at the heap from which a <spider scuttled out across the carpet>=It had arrived as a passenger with some item but nobody knew from which ° or was it actually a part of the item=picking up each object in turn we examined it, investigated its form, interrogating the finder on where it was found and why it had caught his or her ↑attention (.). And we attempted to reconstruct the story about how it had fetched up at that particular place. The coins for example, told of ↑pockets and ↑purses and of countless transpositions from hand to till and back. The paper clips once fastened the documents of a busy official, while the cans, previously filled with liquid, had been held to ↓thirsty lips, through which only moments before had been ↓ inhaling the smoke of smoldering tobacco. ↑From the tooth marks on its surface it was evident that the rubber ball, recovered from a sandy beach, had been the plaything of a dog, whilst the feather=a=feather had once graced a bird in flight ↑high in the air. In short all of these objects evidenced other lives - human, canine, avian sanding::sanding::sanding. And yet in →becoming objects they had broken off from these STAPLING lives, like fallen twigs from a tree and were left lifeless, like so much bric-a-brac stranded on the river bank (.2) ↓>only the spider escaped (0.4) In the following week I asked the students to return to their project sites and to bring along, this time, a selection of materials gathered from the surrounding of these sites.

This time, many of them came back with containers full of stuff (crumpling polythene) like sand gravel or STAPLING leaf litter. Why containers? Well, as=as, as we found, as soon as we emptied out the contents STAPLING materials do STAPLING not by themselves stay in place or hold to the bounds of any form. They have an inherent tendency to run a muck, we are familiar with STAPLING (.1) STAPLING (.1) STAPLING work STAPLING (.1) on STAPLING dirt as <matter out of place> and sure enough we got our hands very dirty. But this offered an experience of tactility that could not have been more different from the ↑clinical detachment from which we had examined the objects of the previous week. Then it was as if we had worn <protective gloves to ensure that there be absolutely no exchange of substance between the object and the hands that held it> STAPLING (.) STAPLING (.)STAPLING (.) broken or STAPLING (.) squashed (.) our STAPLING (.) concerns were exclusively with the stillness of form and like we were at pains to handle every object carefully STAPLING so as not STAPLING to STAPLING tamper with evidence or compromise STAPLING (.) as data. With materials on the other hand the experience of ( ) was all about grain and texture, about the →feeling of contact between malleable substance and sensitive skin, about dry sand cupped in the palm and running through the fingers, wet mud sticking and caking as it dries out and the rough abrasion of gravel and °so on. ↑Now I had myself come along with some materials STAPLING sheets of STAPLING ↑hardboard and a ↑bucket of wallpaper paste, after covering the boards in wall paper paste everyone set about, in whatever way they wished, smearing these mixtures (in however way

they wished) onto the boar::d the result (was) a rather astonishing series of artworks .hhhh and I think (what was most astonishing) about them was the way in which they registered the traces of ↑movement and ↑ flow, on the one hand the manual and bodily gestures of ↓ourselves as practitioners on the other hand the particular flow=patterns of the mixtures they had made STAPLING (.1) STAPLING (.1) STAPLING I STAPLING suppose in retrospect we should not have been so astonished by this, after all it corresponds to our most everyday experience in the kitchen, next time you are making soup, pay attention to the way your STAPLING the STAPLING spoon STAPLING induces STAPLING and responds to STAPLING viscosities and currents of the STAPLING mixed STAPLING ingredient in the STAPLING. What is odd is that studies of the material culture of kitchens have generally concentrated on pots STAPLING and STAPLING pans STAPLING and spoons, to the virtual exclusion of the soup, focus has been on STAPLING objects rather than materials. Yet on second thoughts this is not a division between what we find in the kitchen, objects here in this cupboard, materials there in that one. It:::'s rather a difference of perspective. Householders might think of pots and pans as objects at least until they start to cook .hhhhh but to the dealer in scrap=metal they are lumps of material, likewise STAPLING we could STAPLING return to the objects STAPLING that the students bought in for our first session and ask (.) STAPLING (.) STAPLING (.) What would have happened if we had thought of all this stuff as materials? STAPLING The coin is copper STAPLING and we could have sought to explore it's properties by →hammering it or seeing what happens when you heat it

up, or put it in a flame, the flame would turn green. The paper clip STAPLING well that is a <length of wire and we could unravel it and bend it to other purposes. →The drinks can well that is aluminum, ° feel how light it is. () The cigarette butt <well there is still some tobacco inside=light=it and it will exude smoke and the smoke makes=trails=in the air, that go this way and that in response to the fluxes and rhythms of our own breathing. →The ball, well that is made of rubber and by applying pressure with the hands we can see the softness and springiness we can STAPLING even put it between STAPLING our teeth and imagine what it feels like to be a dog. And of course to think of the feather, as a material is to recognize that it has grown along with the body of the bird, STAPLING of once STAPLING it was such STAPLING an integral part mingling with the air in flight. In every case by treating these objects (.) as materials we rescue them from the cul-de-sac into which they have been cast and restore them to ↑life. Now this lecture is about bringing things back to ↑life. The basic argument is maybe expressed through the means of a simple diagram (° ideally I would draw this diagram on the spot but I can't do that) so here is STAPLING (.) STAPLING (.) STAPLING (.) STAPLING (.) STAPLING. °Draw two lines, they needn't be straight indeed you can allow them to meander a little <however they should proceed alongside one another like the trails left by two people walking abreast>. Each line, each line (.2) let one of these lines stand for a flow of consciousness STAPLING (.) STAPLING (.) STAPLING saturated as it is by light ( ) and feeling and let the other line stand for the →flow of materials as they circulate STAPLING (.) STAPLING (.) (.) meld.

Now imagine, that each of these is momentarily stopped up. On the side of consciousness this stoppage takes on the semblance of an image STAPLING (.) STAPLING (.) STAPLING (.) like a fugitive suddenly caught <under the spotlight>. ↑ and on the other side of materials it takes on the solid form of an object like a bolder placed in the fugitives way, blocking his path STAPLING (.) STAPLING. On our diagram we distinguish both stoppages by a point or blob on each respective line. Now (.2) draw a double=ended arrow connecting the two blobs. (< the horizontal line in the picture there >) Unlike the other two lines this is not the trace of a movement. It is notional rather than phenomenal. It depicts a connection of some kind between image and object. So now that the diagram is complete I can sum up the argument of this talk (.1) it is to → switch our perspectives from endless scuttling back and forth from image to object and from object to image that is such a pronounced feature of (academic) writing in the fields of anthropology, archeology, art and architecture STAPLING (.) STAPLING (.) to the →material flows and the currents of sensual awareness in which images and objects reciprocally take shape. So in terms of our diagram this entails a rotation of ninety degrees from the lateral to the longitudinal. And we find this rotation cropping up again and again in various connections with regard to perception; it underpins the distinction between an optic::optical and a <haptic relation to the world>. A distinction that explains the quite difference:::different experiences of tactility that I have just described showing that the →optical relation is by no means limited to a perception mediated by the ↑eye nor is a →haptic relation limited to the ↑hand. →With regards

to creativity it distinguishes the improvisatory creativity of labour that ↑works things out as it goes along from the attribution of creativity (to the novelty) of determinate ends conceived in advance. But most fundamentally it crops up with the questions of what it means to →make things (.4) We are accustomed to think of making as a project ↑this is to start with an idea in mind and what we want to achieve and <with a supply of the materials needed in order to achieve it> and .hhhh it is finish when the material has taken on the intended form. →At this point we say we have produced an artifact. A nodule of stone has become an ↑axe, a lump of clay a ↑pot and metal a ↑sword. Axe, pot and sword are incidences of what scholars call material culture. .hhhhh a phrase that perfectly captures this theory of making as the unification of stuff supplied by nature with the conceptual representations of a received cultural tradition. In the literature the theory is known as → Hylomorphism from the Greek word for ↑matter and ↑form. And whenever we read that in the making of ↓artifacts practitioners impose forms internal of the mind upon a material world out there →hylomorphism is at work (crumpling polythene sheet). → then hylomorphism is at work. I want to think of making instead as a process of growth .hhhhh and this is to → place the maker from the outset as a participant in amongst a world of active materials. These materials are what he has to work with and in the process of making → he joins forces with them bringing them together or splitting them apart SANDING::SANDING::SANDING synthesizing and distilling in anticipation of what might emerge. The maker's ambitions in this understanding are altogether more humble than those implied

by the hylomorphic model SANDING::sanding::sanding. → Far from standing aloof and imposing his designs on a world ready and waiting to ↑receive them then most he can do is to intervene in worldly processes that <sanding::sanding::sanding::sanding::sanding::sanding> are already going on and which give rise to the forms of the living world that we see all around us in< plants and animals, in the waves of water, snow and sand, in rocks and clouds ( ) adding his own impetus to the forces and energies in play. .hhh the difference between a marble statue and a rock formation such as a stalagmite for instance is →not that one has been made and the other not. The difference is only this (.2) at some point in the formative history of this lump of marble, first a <quarry man appeared on the scene who with much force and with the assistance of hammers and wedges( )after which a sculptor set to work on it, with his chisel in order →as he might put it, that he might release the form from the stone. But as every chip <of the chisel > contributes to the emergent form of the statue so every drop of supersaturated solution from the roof of the cave contributes to the form of the stala::gmite. And when subsequently the statue is worn down by rain the form generating process continues <now without further human intervention>. (.3) .hhhh so-to read making longitudinally as a confluence of forces and materials rather than laterally as a transposition from image to object is to regard it, as such, a form generating or morphogenetic process ( ) hhh as this is to soften any distinction we might draw between organism and artifact for if →organisms grow so to do artifacts and if artifacts are made so too are organisms=what there is amongst countless other things is the extent

of human involvement in the generation of form ° sanding::sanding < but this generation is one of degree (not its kind) >. Of course this is not to deny that the maker might have an idea in mind of what he wants to make STAPLING he may even be seeking to copy a piece of work that all ready stands before him, however even if the maker has a form in mind it is not the form that creates the work it is the →engagement with material and it is therefore to this engagement that we must attend if we are to understand how things are made. Time and again scholars have written as though .hh to have a design for the thing you already have the thing itself some <versions of conceptual art and architecture have taken this reasoning to such an extreme that the thing itself is superfluous = it is but a representation or a derivative copy of the design that proceeded it>. If everything about a form is prefigured in the design then why bother to make it at all .hhhh but →makers know better and one of my purposes is to bring them out of the shadows they have been cast by an uncritical application of the → hylomorphic model (DRAGGING). Well on a cold and windy day in February. The students taking our course in the 4 A's and I were out on a sandy peninsular ( ) patches of snow still lay on the ground. We were learning to make baskets out of willow under the direction of Anthropologist and crafts person Stephanie Bunn. To form a frame, an odd number of lengths of willow where stuck vertically into the ground to form a rough circle tied at the top .hh sanding::sanding::sanding::sanding:: sanding horizontal pieces were then woven=alternatively=in=and=out of the <vertical frame so as to gradually build up a surface in the form of an inverted cone>. As students worked at this either singularly or in pairs (.4)

From the start I think many students were surprised by the ( ) of the material. In a < finished basket the willow seems to sit so naturally as it had been meant to fall into that shape and was merely fulfilling the roll for which it was predestined. But the willow did not want to be bent into shape. Sometimes it put up a fight springing back, striking the weaver in the face, one had to be (.) careful and (.) coaxing. Then we realized that it was actually this resistance, the friction set up by the branches bent forcibly against each other that held the whole construction together. The form was not imposed on the material from →without but was rather generated in this force field comprised by the relations between the weaver and the willow. <Indeed as novices we had little control over the precise forms of our baskets>. Kneeling on the ground our weaving involved quite ↑muscular movements of the entire body or at least from the knees upwards so that the dimensions of the basket °sanding::sanding::sanding related directly to such bodily dimensions as reach and shoulder height. But other forces too entered into the formative process. One of these was the ↑wind. hhhhh. a persistent strengthening wind sending all the verticals of the frame in one direction with an inclination that increased with height (.) no wonder then that many basket::::s especially those built closest to the shore tilted over in an elegant but unintended curve. Well (.) we laboured for almost three hours gradually developing a rhythm and feel for the material. But as the work progressed we began to STAPLING (.1) STAPLING (.1) STAPLING STAPLING (.1) STAPLING (.1) STAPLING it came rather with fading light STAPLING (.1) STAPLING and heavy rain STAPLING STAPLING (.1)

STAPLING (.1) the woven construction from the ground and turn it upside down and reveal what we had made was indeed (.) a ↑ basket. Each basket was different reflecting the movement and ↑temperament of the <STAPLING STAPLING STAPLING> plus the physical stature of its maker. STAPLING STAPLING the students straggled off STAPLING STAPLING STAPLING proudly heading <home with the baskets they had made>. Later they STAPLING tell me that they had STAPLING learnt more from that one afternoon than from any number of lectures and readings, <above all what it →means to make things>, about how →form arises through movement and about the dynamic (.) properties of (.) materials. ↑ Perhaps it is unfair to use basketry as a way to criticise the hylomorphic (.) model. hhhhh. the conclusion that the model does not work for weaving doesn't rule out that it might work <perfectly well> for branches of manufacture in which form is ostensibly imposed on material.
What about making bricks for example hhh.? STAPLING(.)
21 mins 04 secs/54 mins 28 secs

Key for transcription notation

(.) A full stop inside brackets denotes a micro pause, a notable pause but of no significant length.
(.2) A number inside brackets denotes a timed pause. This is a pause long enough to time and subsequently show in transcription.
> < Arrows surrounding talk like these show that the pace of the speech has quickened
< > Arrows in this direction show that the pace of the speech has slowed down
() Where there is space between brackets denotes that the words spoken here were too unclear to transcribe
° Degree symbol indicates reduced volume speech
(()) Where double brackets appear with a description inserted denotes some contextual information where no symbol of representation was available.
When a word or part of a word is underlined it denotes a raise in volume or emphasis
↑ When an upward arrow appears it means there is a rise in intonation
↓ When a downward arrow appears it means there is a drop in intonation
→ An arrow like this denotes a particular sentence of interest to the analyst
CAPITALS where capital letters appear it denotes that something was said loudly or even shouted
= The equal sign represents latched speech, a continuation of talk
:: Colons appear to represent elongated speech, a stretched sound
.hhh A dot-prefixed row of hs indicates an in-breath. Without the dot, the hs indicate an outbreath.
w(h)ord A bracketed h, or a row of hs within a word, indicates breathiness, as in laughter, crying, etc.
(word) Bracketed words are especially dubious hearings or speaker identifications.
- A dash indicates a cut-off

Make

Fitting the Clips

Tools and equipment:

Tape measure
Pencil
Cordless drill
DL envelope
Strip of masking tape
3.0 mm drill bit for timber
25 x Countersunk 3mm x 25mm Pozi-drive wood screws
17 x 22mm grey plastic talon hinged pipe clips
8 x 15mm grey plastic talon hinged pipe clips
Pozi-drive screwdriver
Flat head screwdriver
Access to a step ladder

This presumes the walls are timber lined, other wall types will require other fixings (Drawing 7.0)

Fitting the Clips

7.0 This does not retreat to the wall. It relies on it.
What would moving away from the wall look like?

7.3 This has become a network.

12.22 8 Jan:
Retelling: David Joselit's Painting Beside Itself.
Is this an explicit visualisation of 'painting's networks'?
(DJ, 2009)
This indicates that painting is privileged here.
This can't have its cake and eat it.
The system itself explicitly visualises painting's networks.
(DJ, 2009)
This indicates that painting is privileged here.

Are the attendants human actors in the painting's network?
(DJ, 2009)
Then painting is privileged here.
Does this move away from the painting as cultural artifact to the social networks that surround it?

Then painting is privileged here.

21.59 6 Apr:
Retelling: An interview with Dan Sturgis about the Indiscipline of Painting.
This is a 'contained format'.
(DS, 2012)

7.7 Find a welcome distraction. Fit one talon hinged clip the wrong way around.

7.0 Identify on the wall the fine pencil line that marks out the path the main pipe line will follow. Facing the wall, follow the line up from the floor on the left side, then note that it turns right at a height of 208 cm. Visually trace the line as it moves right across the wall parallel to the floor. Identify the short vertical lines that form four equally spaced Ts with the main horizontal pencil line before it turns at a right angle back to the floor.

7. 1 Use a ladder, a sharp pencil and a tape measure. Start with the four Ts that are formed by the short vertical lines and the main horizontal one. Take the pencil and mark a small cross 100mm either side of where the short vertical lines form the Ts with the main horizontal pencil line. Mark 8 points in total along the drawn horizontal line.

7.2 Facing the wall, mark a small cross on the main horizontal pencil line 150mm before the right angle on the left side. Facing the wall, mark a small cross on the main horizontal pencil line 150mm before the right angle on the right side.

Caution
Is this manual an explicit visualisation of painting's networks?

7.3 On the two vertical lines that run from the floor to form a right angle with main horizontal line mark a small cross 150mm before the right angle. Count 12 marks around the network in total at this point. Add two more crosses on each long vertical lines, one 350mm from the floor and one 1140mm from the floor. Count 16 marks in total.
Look for the place on the drawing

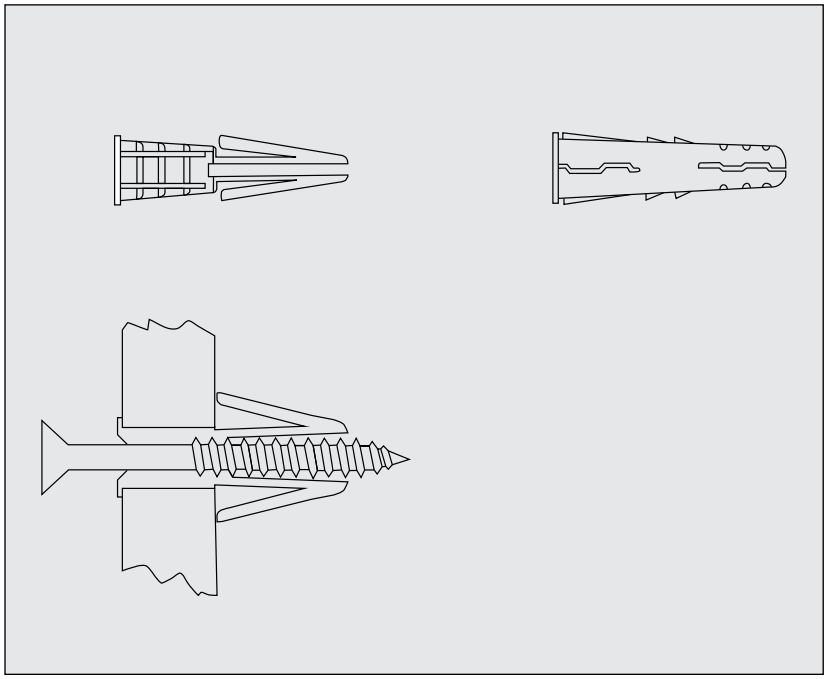

Drawing: 7.0

where the pipe will travel without a clip for too long a distance, this is on the left side of the horizontal line between the mark 150mm from the right angle and the mark 100mm from the first T. Use the tape measure to calculate the distance between these two marks, find the midway point and mark with a small cross. Count 17 marks in total.

7.4 Return to the four short vertical lines that form the Ts. On each vertical line measure and mark a cross 200mm down from the top line of the T and another cross 150mm from the previous mark. Check that each of the short vertical lines has two crosses on each. Count 25 crosses in total.

7.5 Using a cordless drill with a 3.mm wood drill bit, bore a small hole on every marked cross. Attach an open envelope with a small piece of masking tape under each hole before drilling to catch the debris. Drill precisely on each marker on the wall.

7.6 (Drawing 7.1) Open 8 x 15mm talon hinged pipe clips. Insert a screw into the hole of each one. Use a screwdriver to screw the fixings by hand into the 8 holes drilled on the short vertical pencil lines.

Caution
Do not allow one aspect of the work to eclipse any other.

Ensure each clip is fitted so the hinge is on the right side.

Fitting the Clips

7.7 Open 17 x 22mm talon hinged pipe clips. Insert a 25mm in length screw into each one. Use a posi drive screwdriver to screw these fixings by hand into the remaining holes along the pencil line.

Caution
Ensure each clip is fitted so the hinge is on the right side.

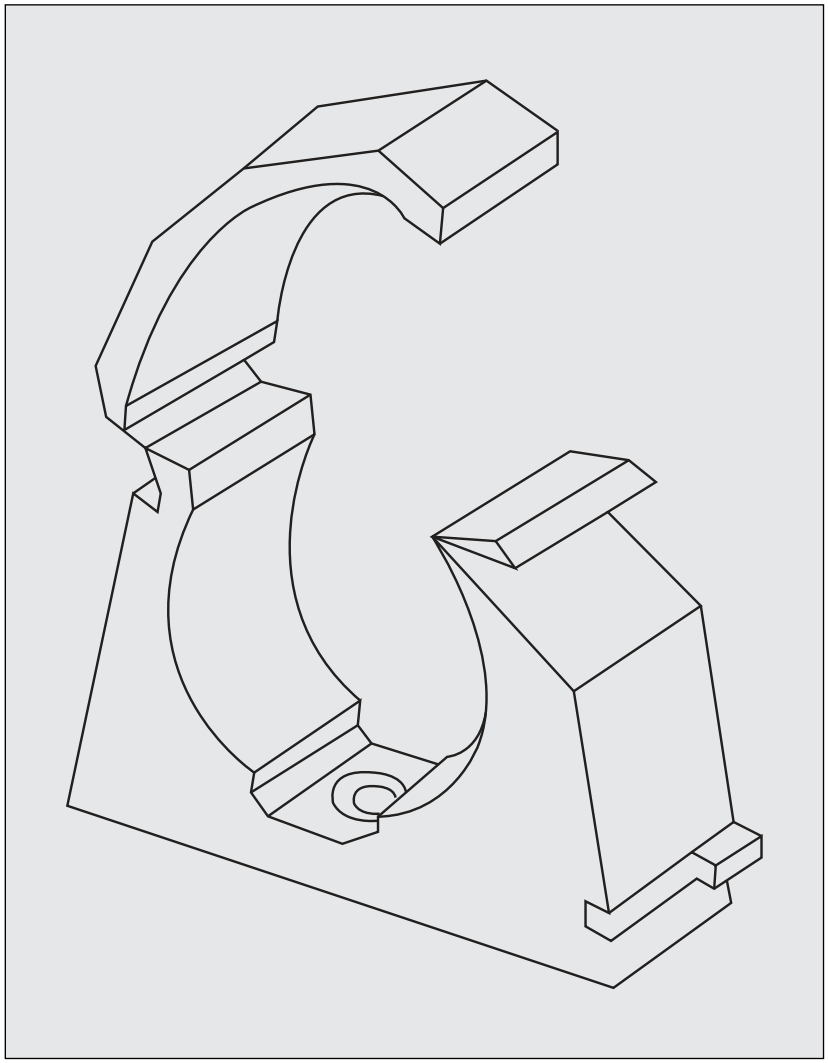

Drawing: 7.1

Fitting the Clips

Mapping out the Network

Tools and equipment:

Tape measure
180 cm spirit level
Pencil
Tape measure
2 x 3M lengths x 75cm wide bubble wrap
White cotton gloves
A4 paper
Marker
Access to a ladder

Mapping out the Network

8.0 This section requires concentration, it maps out the whole structure.

Retelling: Rikke Hansen's Things V Objects
'The power of things is that they refuse to conform completely to our intentions and interpretations, to become the means to an end – even when we have designed them ourselves'. (RH, 2008)

8.0 Retelling: Boris Groys's Politics of Installation.
'The artistic installation is a way to expand the domain of the sovereign rights of the artist from the individual art object to that of the exhibition space itself'. (BG, 2009)

Is this the first mention of the artist?

8.5 Painting/panel/painting/panel/painting

This looks like indecision.

20.50 7 Apr:
This is all matter.

8.5 Use a blunt pencil to lead to inaccuracies.

22.54 18 Mar:
Retelling: Cameron Tonkinwise's Knowing by Being-Their Making: Explicating the Tacit
Post-Subject in Use. (2008)
This manual is compelled to find something out.

23.42 21 Feb:
This must get out of the way.

8.0 Find the pencil line on the wall that marks the centre of the installation space.

Caution
This might not be the centre of the wall.

Using a tape measure, from the floor up to a height of 208cm determine and mark a point on the wall with a clear pencil line. Ask for help to hold the bottom of the tape measure to ensure an accurate measurement. Facing the wall measure 275cm along the floor to the left of the centre point and mark this point at floor level. Take the tape measure and measure from this point up vertically to a height of 208 cm. Using a spirit level draw a vertical line between these two points. The spirit level is only 180cm long so draw part of the line then move the level along, check that as the level moves it remains perfectly square. This is done by making sure that every time the spirit level moves up the wall, part of the tool remains on the the line that has already been drawn so it can act as a guide. Move up the wall in this way until the pencil line is 208 cm long. Check the vertical line at multiple points with the spirit level to make sure there has been no deviation.

8.1 Find a midpoint between the centre line of the installation space and the vertical line drawn 275cm to the left of this centre. Measure 208 cm up again from the floor and mark a point. Using a spirit level join the 3 marks on the wall at the height of 208cm to make a 275 cm horizontal line that runs from the vertical line on the left to the centre point of the installation space.

8.2 Facing the wall, measure 210cm along the floor to the right of the centre point and mark this point at floor level. Take the tape measure and measure from this point up vertically to a height of 208 cm.

8.3 Using a spirit level draw a vertical line up the wall in pencil to the 208 cm point.

Caution
Take care to make sure this line remains square all the way up.

Once the line is fully drawn check it at multiple points with the spirit level to make sure there has been no deviation.

8.4 Find a midpoint between the centre line of the installation space and the vertical line drawn 210 cm to the right of this centre and measure 208 cm up again from the floor and mark a point. Using a spirit level join the 3 marks on the wall at the height of 208 cm to make a 210 cm horizontal line that runs from the vertical line on the right to the centre point of the installation space. Check that all the lines drawn on the wall are square and form right angles at the point the horizontal line meets the vertical lines and with the floor. Check with the spirit level, as well as by eye. Check for accuracy by measuring at certain points across from one line to another, or from the floor to the line that runs parallel with it.

Caution
The floor and the ceiling may not be parallel. Make adjustments if necessary.

8.5 Notice where the four split battens are fixed to the wall. These indicate where the paintings will sit. Find the pencil line above each split batten that marks where the top edge of each painting will be, find the centre line of each painting marked along these top lines. Using a tape measure, measure 12cm to the left of each centre line and mark a point.

Caution
Using a blunt pencil can lead to inaccuracies.

Draw a vertical line up from the line that indicates the top edge of the painting to the main horizontal line that runs at a height of 208cm. Repeat this 3 more times when there is a split batten indicating where a panel will hang. Check each of the four lines are equally spaced and form perfect Ts with the main horizontal line.

Caution
This network of drawn lines indicates the centre lines the pipe work will follow. Check for any imbalance.

8.6 Identify an area of the floor that has minimal foot traffic and is a safe space to store the panels during the installation of the system. This must be a space away from the main installation area. Lay a 3m length of bubble wrap onto the floor. Wearing white cotton gloves lift each of the four paintings off the split batten that is holding it to the wall. Lay the panels face up onto the bubble wrap on the floor. Cover with more bubble wrap to protect the vulnerable front surfaces.

Retelling: Helene Schumacher's Inside the world of Instruction manuals. (2018)

Write a note on an A4 piece of paper that reads Do Not Touch, and ensure the writing is clearly visible. Leave the note on the floor with the 4 covered panels.

Caution
These are recognisable as paintings.

Mapping out the Network



Mapping out the Network



Notice

Notice

Notice



A PAINTING BY ANITA STORCK

John Baldessari
Commissioned Painting:
A Painting by Anita Storck, 1969]

Acrylic and oil on canvas
150.5 x 115.6cm

Notice

Hanging the Panels

Tools and equipment:

White cotton gloves
180 cm spirit level
Tape measure
Pencil
Pozi-drive screwdriver
Flat head screwdriver
Bubble wrap 3m x 75cm width
Crates with 4 panels and split battens
4.5 mm drill bit for timber
Cordless drill
DL Envelope
Masking tape

Hanging the Panels

9.0 Retelling: Anthony Huberman's Take Care
Is this 'reigned in'?
This won't 'sit still under someone else's terms'.
(AH, 2011)

9.1 Is this asking?
It can't make.
It can propose.

9.1 This is looking with all the senses.
This is haptic.
Recalling: Rosalind Krauss's Mind/Body Problem:
Robert Morris in Series.
There is a…' body encountering the resistance of material external to it and, leaving its mark on that material, being itself deformed or inflected by it'.
(RK, 1994)

9.2 What is the centre of attention?

9.3 Retelling Boris Groys's Politics of Installation.
The space inside the installation is no longer neutral and the audience is invited into experience the 'holistic, totalizing space of an artwork. Anything included in such a space becomes a part of the artwork simply because it is placed in this space'. (BG, 2009)

Don't overlook anything.
Even the cable on the pump is part of the work.
Dont position it.

9.4 Is this generous?

9.0 Remove and store the length of bubble wrap that covers the 4 panels on the floor. Wearing white cotton gloves to protect the front surface of the canvas lift one panel and position it onto one of the split battens on the wall.

Caution
Fingers and cotton gloves get caught between the edge of the frame and the wall as a painting is positioned on the split batten.

Make sure that the painting is firmly in place. Check the top edge of the canvas sits along the pencil mark on the wall that indicates the correct height. Place a spirit level on the top of the painting to check it is level.

Caution
Ensure that the spirit level is clean. Do not scuff the top edge of the paintings.

Take into account the bulging canvas edges which can result in the spirit level giving an untrue reading. Stand back from the painting to check the level by eye. Hang the other three panels in exactly the same way, check each one is firmly in position on the batten. Ensure that all of the top heights of the paintings are identical by laying the spirit level across from one to the next. Check the spacing between each panel is equidistant.

Caution
Inaccuracy in levelness will jeopardise the filling process.

9.1 Unscrew the front panels from the 4 crates using a screwdriver (Drawing 9.0). Put the front panels and screws to one side. Wearing white cotton gloves lift the paintings from the crates and off the split battens that are holding them in place.

Caution
Take care not to hit the top of the canvas on the top of the crate as each is lifted out of position.

Identify an area of the floor that is safe to leave the panels but close to hand. Lay a 3m length of bubble wrap onto the floor. As each panel is removed from the crate lay it down on the bubble wrap with the canvas side facing up. Once all the 4 panels are removed from the crates use a screwdriver to remove each split batten that the paintings were fixed on. Let the 2 screws holding each batten in place remain in the holes through the batten. Identify the 2 horizontal pencil lines drawn across the installation wall. Work off the lowest one because the top one indicates the final height the paintings will hang at. Take one split batten and position it so that the bottom edge is on the second horizontal line drawn with its centre line sat perfectly in line with the mark on the wall that indicates where the centre line of a panel will be. Make sure the batten is the same way up as it was in the crate. Push the sharp side of the screws still poking through the batten so they push slightly into the wall, keep the screw as straight as possible, these marks identify the points to drill. Push the screw firmly with a finger and thumb and feel the wall

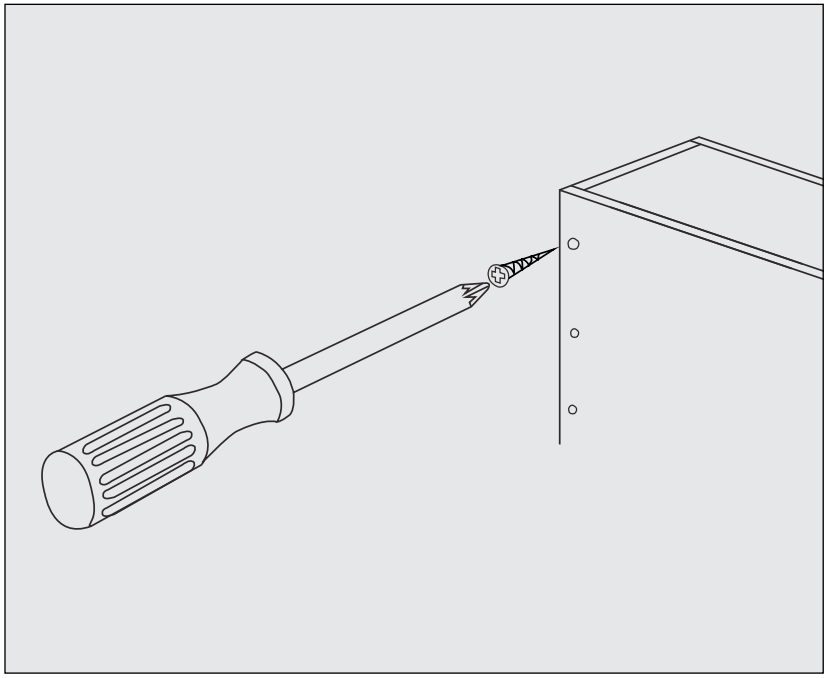

Drawing: 9.0

20.45 23 Jan:
Retelling: Paulo Freire's Pedagogy of the Oppressed. This is not 'abstract, isolated, independent and unattached to the world'. (PF, 1996)

9.4 Listen differently.

12.47 8 Apr:
Retelling: Anthony Huberman's Take Care.
Does this 'speak frankly from a positioned of exposed vulnerability'? (AH, 2011)

This is fearful.
This is privileged.

9.4 Displace any anxiety of the work working on the work working (functioning).

underneath dent and mark with the pressure applied.

Caution
This is haptic as opposed to optic.

Repeat this with all 4 split battens until there are 8 clear marks to drill. Using a 4.5 mm drill bit drill holes in the 8 positions marked. Secure an open envelope under each drill hole with a small section of masking tape before drilling to collect the debris. Use a screwdriver to screw each batten in place. Make sure each baton is firmly in position.

Caution
Each painting can contain over 20 litres of fluid.

Lay a spirit level along the top of each one to make sure they are level. Laying the spirit level across from one batten to the next to check they are all at the same height. Screw the front panels of the crates back on and store somewhere out of sight (Drawing 9.1).

9.2 Find the pencil mark that indicates the centre point of the installation space. Using a tape measure measure up 150cm from the floor and mark a point. With a spirit level mark a line horizontally across the wall that is 150cm from the floor and parallel. This line, indicating the top level of the paintings, should be 300cm in length with the centre point at the centre point of the installation space. Keep checking that the 300cm line remains 150cm from the floor by measuring with a tape measure at several points.

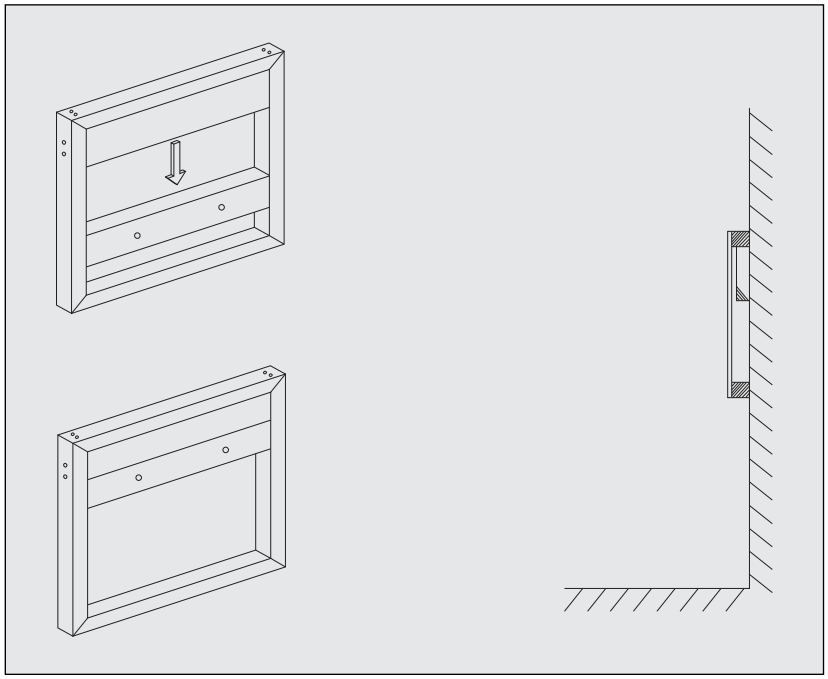

Drawing: 9.1

Hanging the Panels

Measure down from the 150cm line by 11.3cm using a tape measure. At this point draw another line, parallel to the last and of equal length to mark the bottom of the battens that will hold the paintings to the wall. Now mark where the 4 panels will sit, equal distances from each other, with a 40cm gap between each one. Working off the top horizontal line, mark each point clearly so that these guidelines will be easily visible but not too heavy that they will be impossible to erase. Find the centre point of the installation space again and mark 2 points 40cm apart along the horizontal line with the centre point between the two exactly at the centre point of the installation space, this gap marks the space in between two panels. Move out from each of those marks, measure 45cm from the left one and 45cm from the right one. These marks indicate where the edges of two panels should fall. Mark another 40cm gap from these marks and then another set of marks 45cm apart to indicate the edges of the final two panels. Working from left to right, check the measurements across the horizontal top line run in this pattern 45cm, 40cm, 45cm, 40cm (this one passes over the centre line) 45cm, 40cm 45cm. Using a tape measure find the centre of each 45cm gap, extend these centre line marks down the wall to meet the parallel horizontal line running 11.3cm below. Make four clear marks on the wall to indicate that these are the centre points for the paintings.

Hanging the Panels

Caution
This work must not be positioned near any visible pipework that forms part of the building's water or gas system.

9.3 Identify a flat wall that is at least 550 cm wide that has a ceiling height of at least the standard height of 240 cm with no skirting and no central plug sockets or other interruptions. Ensure the wall is free from scuffs or marks in advance of the construction. Mark the centre point on the wall that the work will occupy clearly with a pencil line. Facing the wall ensure there is a mains plug socket within reach of the installation wall to the left side, or on the installation wall but at least 275 cm left of centre so it does not interfere with the work.

Caution
Power is essential.

9.4 Charge the spare battery from the cordless drill. Locate any materials delivered to the site. Find those who have offered to support the construction and ongoing maintenance of the work. Unpack the car of all the tools and materials required for installation.

Caution
What is the motivation here?

Surface

‘What we take to be graphics, sounds and motion in our screen world is merely a thin skin under which resides miles and miles of language’

In his essay *Revenge of the Text* Kenneth Goldsmith describes what he terms a ‘glimpse under the hood’ during a flight back to New York. Typical of planes of that period there are small screens embedded into the back of each seat that chart the progress of the aircraft along with other details about weather, altitude and time. During the flight the screen flickers and the map and details disappear only to reveal the DOS start-up screen with lines and lines of “unfurling” text. Goldsmith describes this event as a puncture of the skin to expose the miles and miles of language under the hood.

Pierceing the surface.
Goldsmith, K. (2011) Revenge of the Text in Uncreative Writing, New York, Columbia University Press, p16

Instructions for the Shrink-wrapped paintings:
Visitors are invited to participate in the making of the Shrink-wrapped Paintings.

Instructions are as follows:

1 Remove a canvas from the wall.
2 Lay the canvas flat and face up on the table.
3 Add selected item(s) onto the surface of the painting (please do not add items to the backs of the canvases).
4 Using only the shrink-wrap plastic provided, wrap these new items onto the front of the canvas.
5 Tightly pull the shrink-wrap over the objects and painting and wrap around its back repeatedly.
6 Ensure the items are securely bound to the painting's surface.
7 Cut the shrink-wrap roll loose and return it to the table.
8 Rehang the painting on the wall.

Prohibited materials include, but are not limited to: food and other organic material, weapons, heavy items, bodily fluids, illegal substances, sharp objects, chemicals and other hazardous materials.

Clear, 2017
Sarah Kate Wilson

Stretcher bars, shrink-wrap plastic, instructions and mixed media.
125 x 99.5 x 5cm

Surface



Surface

Packing the Panels

Tools and equipment:

Marker pen
4” roller and tray
Acrylic primer 2.5 litre
4 x 4.5 x 45mm screws
4 x 69 mm x 44mm planed square edge timber x 250mm lengths
Saw
Pozi-drive screwdriver
Cordless drill
5mm drill bit
Countersink drill bit
8 x 12 mm General Purpose MDF 700mm x 700mm
8 x 12mm General Purpose MDF 700 mm x 200mm
8 x 12mm General Purpose MDF 676 mm x 200mm
8 x 18mm x 44mm planed square edge timber x 670mm lengths
8 x 18mm x 44mm planed square edge timber x 200mm lengths
Wood glue
2.5 X 25mm countersunk woodscrews
3 mm drill bit for timber

Packing the Panels

09.25 4 Apr:
This is not suspicious.
This is testing/contesting.

14.25 Apr 12:
Retelling: Ruth Sonderregger's Anything but a Safe Space.
This is making a case for the educational spaces that make room for this and for those who work within them, 'battling modularisation and incessant evaluation'. (RS, 2015) This is making a case for a space that fosters 'knowledge that might not 'produce enough return'. (RS, 2015)

The word in my ear should be full of this voice.

This must be that 'safe space'.
This has to have courage.
This might be edited out later.

There is an assertiveness in the object.

08.21 4 Apr:
Retelling: Ruth Sonderregger's Anything but a safe space.
This studies
This is curious.
This has left so/too much out.

13.37 12 Apr:
The finish on the binding cloth is difficult to ascertain from the swatches on the website. The weave is impossible to see as is the depth of colour or surface: 'One has the feel of a man's trouser suit and the other a school jumper'

Neither description sounds quite right.

10.0 Pack the crates in the car, keep them upright and wedge them in place. Pack the other tools and materials required for installation.

10.1 Using a marker pen write Fragile clearly on the front of each crate. Use a series of large hand drawn arrows to clearly indicate which way up the crates should be kept so as not to damage the panels inside.

10.2 (Drawing 10.0) Using a 4" mini roller and tray apply a final coat of primer to the front and sides of each panel. Ensure the primer is applied lightly, covering all the surfaces evenly. Make sure that any lines caused by the edge of the roller are blended in thoroughly.

Caution
Do not let the primer adhere the lip of the canvas pocket to the panel behind.

Inspect each panel closely for inconsistencies in the primer application. Wait for the final coat to dry. Wearing cotton gloves, lift each finished panel onto a split batten in each crate. Take care not to dent or damage the vulnerable edges of the panels as they are lifted into place. Screw the lids of the crates in place.

10.3 Using a saw cut along the 250mm lengths of the 69mm x 44mm planed timber at a 45° angle to make the split battens. To keep the cut pairs together, mark each one in pencil with a corresponding number to avoid getting them mixed up, mark the centre line. Drill two holes 50mm from the end of each 250 mm length. The holes should be drilled into the side with the largest front surface for each half of the batten that will fix to the wall and the crates and into the edge with the 45° angle for those that will fix inside the panels, use a 5mm drill bit. Countersink the holes by 10 mm. Fix the right half of each batten into the back of a crate with 2x 4.5 x 45mm screws. Fix the battens with the large front surface facing out and in the middle of the crate at a distance of 140mm from the top of the batten to the top of the crate. Screw them in place, do not glue. Stand the crates up. Keep the other half of the battens safely

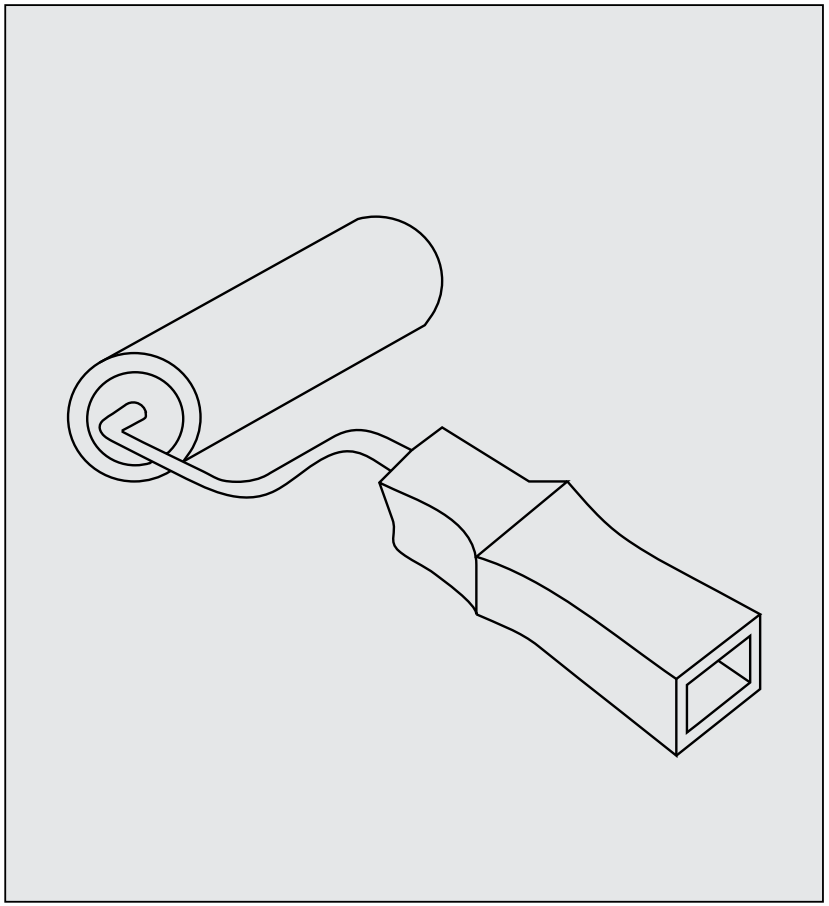

Drawing: 10.0

Split Batten

A split batten is a hanging device used to install larger or heavier flat objects onto flat surfaces of wall. A split batten uses two bespoke lengths of wood, usually cut at a 45° angle, that slot together to form a secure fitting. One section of the batten is fitted to the wall and the other to the object. The lip of the battens prevents the object from moving and disperses the weight across the entire length of the fixing.

Packing the Panels

A decision is made.
597 Buckram - ‘the school jumper’.

Retelling: 48 inbox and 36 return emails with the Director of Exhibitions Operations (Steve) at the The School of the Art Institute Chicago. The ebb and flow of an endless stream of correspondence, in advance of an install, detailing pipe clips and flexible hose.

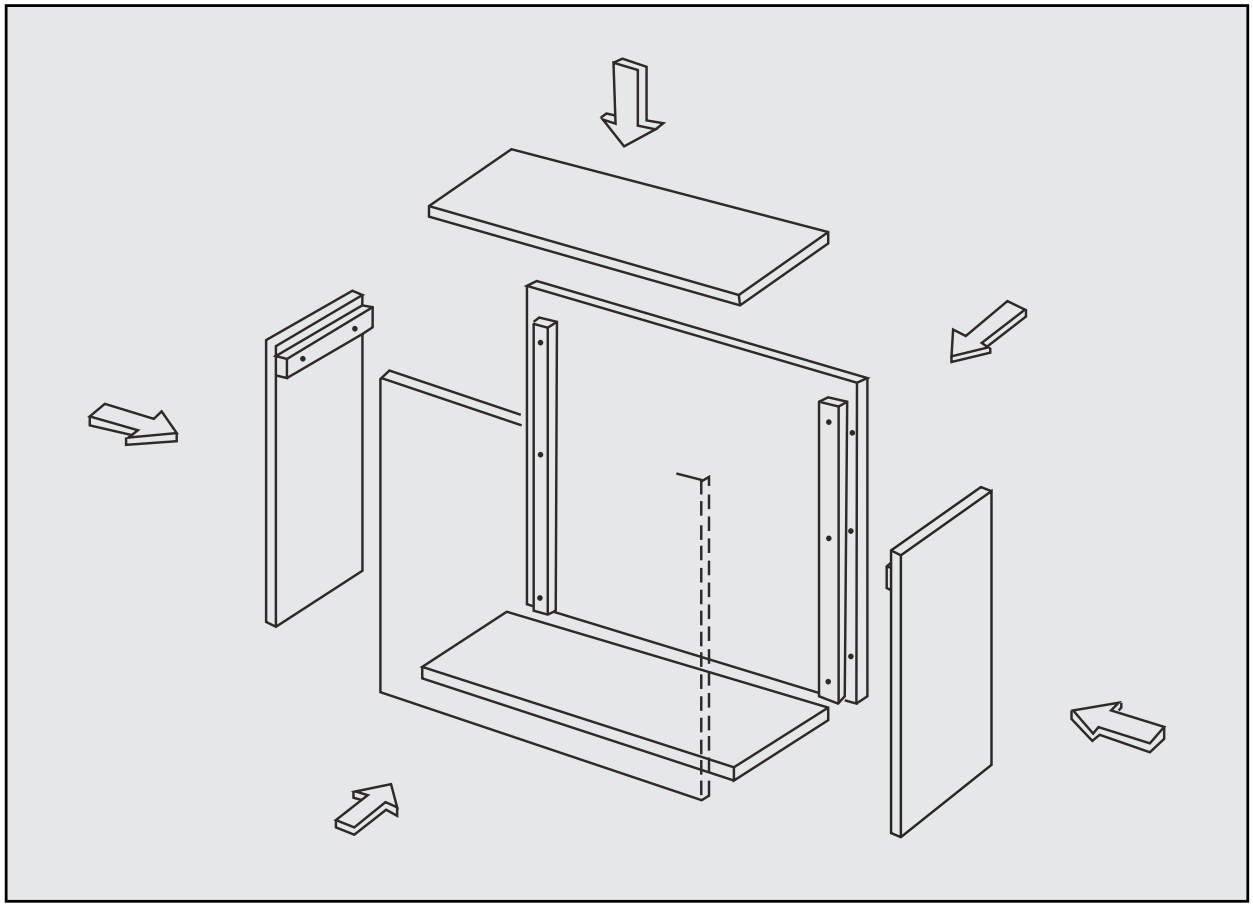

Drawing: 10.1

ready to fix them into the panels.

10.4 (Drawing 10.1) Use a 3mm drill bit and 25mm length wood screws throughout the process of making the crates. Drill, wood glue and screw together each fixing making sure to countersink each hole. Pilot drill every hole in order to prevent splitting the 12mm MDF edges.

10.5 Make the 4 back panels first by fitting two planed timber battens 670mm in length along both edges of the 700mm squared pieces of MDF. Make sure the battens sit in from the edge by 12mm and up from the bottom by 12mm. Check each batten is parallel to the edge by measuring the gap.

10.6 Make 8 side panels for the crates by fitting the two planed timber battens 200mm in length along the 200mm edge of the pieces of MDF that are 676mm long. Make sure the battens sit 12mm from the top of the length of MDF and are perfectly square. Fix 2 MDF sides to each back. Remember to drill, glue and screw, making sure to pilot hole any screws that will go directly into the 12mm edges of the MDF. Drill, glue and screw the 700mm x 200mm tops and bottoms on to each crate. Lay each crate on its back and sit the remaining 700 cm square fronts in place. Drill 12 holes around the entire edge of the lid, no more that 6mm in and equidistant. Counter sink the holes. Do not screw the lids in place.

Packing the Panels



System

Routine, passing orders and organisation.
Using a boatswain’s call.
Oona Grimes

A great variety of notes and tones may be obtained with the boatswain's call by manipulating the fingers and varying the breath blown into the mouth of the gun, but certain notes and tones are only used in piping in the Royal Navy, and these, together with the method of producing them, are described below.

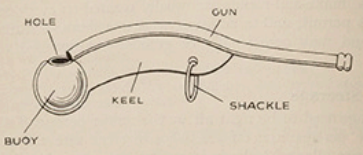

(i) The boatswain's call.

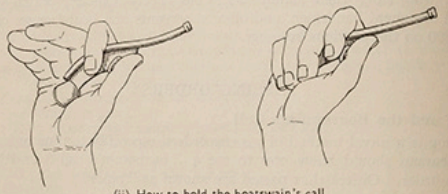

(ii) How to hold the boatswain's call

Fig. 66.

There are two main notes, the "low" and the "high," and there are three tones; these tones are the "plain," marked on the chart (Fig. 67) with a steady line, the "warble," marked with a wavy line, and the "trill," marked with a cross-hatched line.

The plain low note is produced by blowing steadily into the mouth of the gun with the hole of the buoy unobstructed by the fingers. The plain high note is produced by throttling the exit of air from the hole of the buoy; this is done by closing the fingers around the buoy, taking care not to touch the edges of the hole or the end of the gun. Intermediate notes can be obtained by throttling to a greater or lesser degree.

The warble is produced by blowing in a series of jerks, which results in a warble similar to that of a canary.

The trill is produced by vibrating the tongue while blowing, as in rolling the letter "R."

The chart shows the various "pipes" used in the Royal Navy today. The figures at the top of each diagram represent seconds of time. The nature, continuity and tone of the notes are indicated by the various lines, and the degree of their slope indicates the speed of ascent or descent of the notes.

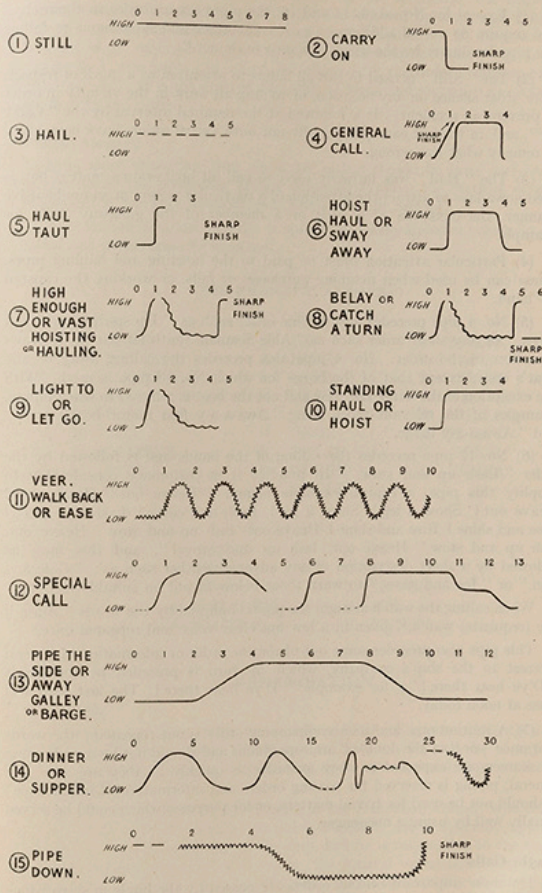

Fig. 67.—Piping chart

System

Developing Drip Detect Machine
with Jon Roome

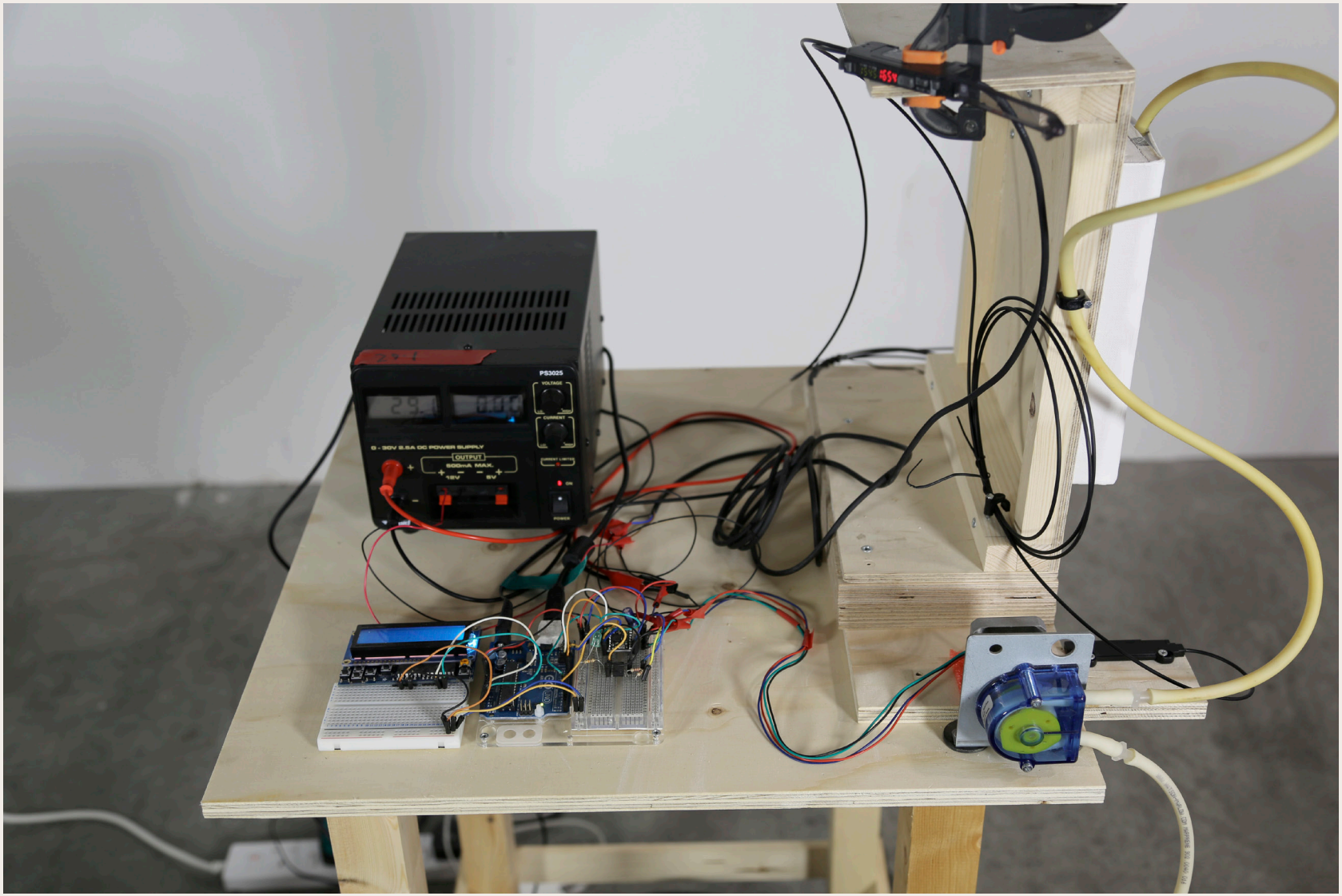
PS3025
VOLTAGE
CURRENT
0 - 30V 2.5A DC POWER SUPPLY
OUTPUT
500mA MAX.
-10V
5V
ON
POWER

Prototype Drip detect machine code
Date: 06/04/2018
Version: V12-3

```
// RGB Shield Setup
#include <Adafruit_RGBLCDShield.h>
#include <Adafruit_MCP23017.h>
#define RED 0x1
#define YELLOW 0x3
#define GREEN 0x2
#define TEAL 0x6
#define BLUE 0x4
#define VIOLET 0x5
#define WHITE 0x7
Adafruit_RGBLCDShield lcd = Adafruit_
RGBLCDShield();
int8_t offset = 0;   // Hour offset set by user with
buttons
uint8_t backlight = WHITE;  // Backlight state

// motor includes
#include <Arduino.h>
#include “DRV8825.h”

// timer includes
#include <Wire.h>
```

```
#include “RTClib.h”
#include <Time.h>
#include <TimeAlarms.h>
RTC_DS1307 RTC;

// motor setup
#define MOTOR_STEPS 200
// motor wires
#define DIR 12
#define STEP 8 // changed by jr different from v8
was on pin 13
#define ENBL 4
// microstep control for DRV8825
#define MODE0 11
#define MODE1 10
#define MODE2 9
DRV8825 stepper(MOTOR_STEPS, DIR, STEP,
ENBL, MODE0, MODE1, MODE2); // JR added
ENBL to enable enable.

// steps and events setup to allow random
events
          int stepVals[] = {2, 4, 8, 16}; // possible
stepper motor resolutions.
        int randStep;
          int microStep; // sets the microstep value
so 1 step will be 1 microstep
```

```
        int randTotalEvents;
        int stepsDone;
        int extraSteps; // used in noDrip function
        int eventNumber;
          bool useDefaultSteps = true; // flag to run
the default steps when needed ( first run )

// variables
          int secPerDripArray[7] = { 240, 300, 330,
900, 1200, 1500, 1800 }; // target drip time in
read_buttons
          int counter = -1; // used in selecting drip
target in read_buttons
          int action = 0; // action 1 =
runpaintmachine action 2 = runFill
        volatile boolean drip = false; // flag for use
in checking if there has been a drip.
          volatile boolean fillDrip = false; // flag for
use in checking if there has been a drip during
the fill function.
          bool machineRunning = false;
          int tuningVal; // to use in tuning the
accuracy

// buttons
   int stopButton = false;
```

```
// drip timer
  int unsigned long previousDripTime_t = 0; //
initial drip time of 20 seconds
  int unsigned long dripTime_t;
  int unsigned long dripInterval_t;

    int unsigned long totalDripIntervalTime; //
going to use this to work out overall average
    int totalStepTotal; // going to use this to work
out overall average
    int unsigned long overallAverage; // the overall
average since the machine started a run
    int totalDripDetects; // the total detected drips
since the machine started a run.

// drip interval calc ( working out the average
time interval between drips in seconds using an
array )
  const int numIntervalReadings = 4;     // was ten
// int readings[numReadings];      // the readings
from the analog input
  int intervalReadings[] = {60, 60, 60, 60};      //
the readings from the analog input
  int intervalReadIndex = 0;              // the index
of the current reading
  int intervalTotal = 240;                // the running
total
```

```
  int timeAverage = 60;

// step calcs (working out the average steps
using an array) stores 10 readings in an array to
work out an average
  const int numStepReadings = 4;  // was ten
  //int stepReadings[numStepReadings];
  int stepReadings[] = {30, 30, 30, 30};
  int stepReadIndex = 0;
  int stepTotal = 120;                  // the running
total
  int stepAverage = 30;
  long stepEstimate;  // the guess number of
steps that was calculated
    long stepEstimateCheck = 30;
    float stepEstimateFloat;
//  int long numberofSteps = 30;

// default steps calculation ----------------------
-----------------------------------

    long numberofSteps = 10; // full steps this
affects the total number of events possible 160
default
//                          160 8th steps or 20 full steps
gives one drip from the pump.
 //                         range 50 to 1000
```

```
    long numberofStepsSquared =
(numberofSteps*numberofSteps); // square the
steps
    long steps = 0;
    long numberofSteps2 = numberofSteps;

// ------------------------------------------------------
----------------------------------

void setup() {

// Screen setup Initialize screen
    lcd.begin(16, 2);
    lcd.setBacklight(WHITE);
    say(“Start Menu”, “Make Selection”);

// interupt setup
  attachInterrupt(0, dripDetect, RISING); // drip
sensor detect. stops everything when there is a
drip runs the function  dripDetect

// initialize all the readings to 0:
//for (int thisReading = 0; thisReading <
numReadings; thisReading++) {
//readings[thisReading] = 0;
//}
```

```
// timer setup
    Serial.begin(9600);
    Wire.begin();
    RTC.begin();
    setSyncProvider(syncProvider);
    RTC.now();

 // motor setup
    stepper.setRPM(20); //motor RPM
    stepper.enable(); //  power to motor
// stepper.disable(); // power off

}

int p1Timer;
float minPerDrip;  // TARGET duration in mins
how many mins in between drips To be selected
via led screen / 4 min minimum target
float secPerDripTarget;  // the target number of
seconds between drips
//
//int secPerDripTarget = 120; // adding 37%
to target to compensate so / need coding as
calculation before changing target time
float totalEvents = 10 ; // number of events to
occur within the given the duration 25 default
                    // range between 10 & 50
```

```
int totalWaitTime;
float waitTime;
float tune;
long waitTimeMills;
float durationSquared = (minPerDrip*minPerDrip);
// square the duration
float eventSegment = (durationSquared /
totalEvents); // work out single segment
int totalSteps;

// ------------------------------------------------------
----------------------------------

// time sync this does the same thing as RTC_
DS1307::get()
time_t syncProvider() {
return RTC.now().unixtime();}

// Main Loop ------------------------------------------
-------------------------------------

void loop() {

stepper.disable(); // make sure the motor is not
drawing current when its waiting for input on the
display.
```

```
readButtons();

if (machineRunning){runMachineLoop();} //
makes sure that after a drip is detected the
machineLoop starts again ( keeps it running )

//Serial.print("im in the main loop"); // just
checking got back to here

}

// Main Loop ------------------------------------
----------------------------------

void runMachineLoop(){

  while (drip == false) {

//          drip = false;

          int totalSteps = 0;
          float totalWaitTime = 0;
          float totalEvents = 15;

// exponential setup stuff using the calculations
// ------------------------------------------------
-----------------
```

```
        long numberofSteps =
stepEstimateCheck;
        long numberofStepsSquared =
(numberofSteps*numberofSteps); // square the
steps

        float minPerDrip = (secPerDripTarget / 60
);
        float durationSquared =
(minPerDrip*minPerDrip); // square the duration

        Serial.println();
        Serial.print( “durationSquared “);
        Serial.print( durationSquared);
        Serial.print(“ “);
        float eventSegment = (durationSquared /
totalEvents); // work out single segment
        Serial.print( “eventSegment “);
        Serial.print( eventSegment);
        Serial.println();

//          long steps;
        stepsDone=0;

// long randTotalEvents=random (5, 31); // range
of possible event totals / need to make this more
```

```
random
// long totalEvents = randTotalEvents;

        long stepSegments =
(numberofStepsSquared / totalEvents); // moved
from above so that it can use the random  events

        Serial.println();
        Serial.print("Requested Duration: ");
        Serial.print(secPerDripTarget);
        Serial.print(" ");
        Serial.print("Requested Steps: ");
        Serial.print(numberofSteps);
        Serial.println();
        Serial.print("Requested events: ");
        Serial.print(totalEvents);
        Serial.println();
        Serial.println();

        long previousTime=0;
        long previousStep=numberofSteps;

//report1(); // report on the duration number of
steps and events

// main for loop that creates the events
// ------------------------------------------------
```

```
------------------

            for (int i = 1; i < totalEvents + 1; i++) {
              if (drip) { Serial.print("breaking from the
event loop");  Serial.println(); break; }
//                eventNumber = i;
                float thisTimeAsFloat=((sqrt(eventSeg
ment * i))*60);
                long thisTime = (int) thisTimeAsFloat;
                waitTime=(thisTime-previousTime);
                (previousTime = thisTime);
                float thisStepAsFloat=((sqrt(stepSegm
ents * ( totalEvents - i ) )));
                long thisStep = (int)thisStepAsFloat;
                steps=(previousStep-thisStep);
                (previousStep = thisStep);
                stepsDone= (stepsDone+steps);
                waitTimeMills = waitTime*1000;
                //randStep = stepVals [random (0, 4)];

                   // ----------------------------------
--

                   Serial.print("Event:");
                   Serial.print(i);
                   Serial.print(" ");
                   if (i <=9){ Serial.print(" ");}
```

```
                    //   Serial.print(thisStep);
                    //   Serial.print(“ “);
                    Serial.print(“ Wait: “);
                    if(waitTime<=9){ Serial.print(“ “);}
                    Serial.print(waitTime);
                    totalWaitTime =
(totalWaitTime+waitTime);
                    Serial.print(“ “);
                    if(totalWaitTime<=100){ Serial.
print(“ “);}
                    Serial.print(totalWaitTime);
                    Serial.print(“ “);
                    //   Serial.print(steps);
                     Serial.print(“ Steps: “);
                    if(steps<=9){ Serial.print(“ “);}
                    Serial.print(steps);
                    Serial.print(“ “);
                    Serial.print(“ Steps Done: “);
                    Serial.print(stepsDone);
                    totalSteps = (totalSteps + steps);
                    Serial.println();

                    //-----------------------------------
--

                    //report2(); // report in Loop on
Event number, wait time, steps, step value, total
```

```
steps

          for (int i = 1; i < waitTime + 1; i++){ //    do
lots of little waits and check for things happening
           if (waitTime>240) { stepper.disable();}; //
turn off power to the stepper if the wait is over
240 seconds
           Alarm.delay(1000);
//           Serial.print(steps);
//           Serial.println();
           if (drip) {  Serial.print("breaking from the
wait loop");  Serial.println(); break; }
           checkForPause();
          }

                runMotor();

           sayVarSplit("Target ", secPerDripTarget ,
" Sec" , "Average ", overallAverage ,  " Sec");
           // text-int-text text-int-text / add space
for no int
           if (i == totalEvents & drip == false)
{noDrip();}
           // if there has been no drip during the
whole event loop then do the noDrip function.
```

```
} // end of the main for loop

            Serial.println();
            Serial.print("Calculated duration ");
            Serial.print(totalWaitTime);
            Serial.print(" calculated Steps ");
            Serial.print(totalSteps);
            Serial.println();
            Serial.println();


      }

Serial.println();
Serial.print(">>> breaking from machine while
loop... doing calucaltions ");
doCalculations();
Serial.print("calculations done returning to main
void");
Serial.println();
return;
}

void doCalculations(){

//  calculate the total number of drips
// ------------------------------------------------
```

```
------------------

        totalDripDetects = totalDripDetects+1; //
the total number of ‘allowed’ drip detects since
the machine was run.

//  drip interval time calcs. add the driptime to
the
// ------------------------------------------------
------------------
        previousDripTime_t = dripTime_t;

        totalDripIntervalTime =
totalDripIntervalTime + (dripInterval_t/1000);
// used in working out the overall average drip
interval

        intervalTotal = intervalTotal - intervalReadi
ngs[intervalReadIndex];
        intervalReadings[intervalReadIndex] =
dripInterval_t/1000;
        intervalTotal = intervalTotal + intervalRead
ings[intervalReadIndex];
        intervalReadIndex = intervalReadIndex +
1;
          if (intervalReadIndex >=
numIntervalReadings) { // start at the beginning
```

```
of the array again if we have reached the
maximum readings
              intervalReadIndex = 0;
             }
           timeAverage = intervalTotal /
numIntervalReadings;

//  Step calcs , work out average number of
steps
// ------------------------------------------------
------------------
           stepTotal = stepTotal -
stepReadings[stepReadIndex];
             if (stepsDone<= 0){ stepsDone = 1; }
// make sure there is not a zero going into the
calculation?
           stepReadings[stepReadIndex] =
stepsDone+extraSteps;

           totalStepTotal = totalStepTotal+
(stepsDone+extraSteps); // to work out the
overall average

           stepTotal = stepTotal +
stepReadings[stepReadIndex];
           stepReadIndex = stepReadIndex + 1;
            if (stepReadIndex >= numStepReadings)
```

```
{ // start at the beginning of the array again if we
have reached the maximum readings
                stepReadIndex = 0;
              }
            stepAverage = stepTotal /
numStepReadings;

// calculate the number of steps for the next loop
// ----------------------------------------------------
------------------
              if (stepAverage > 0){
                stepEstimateFloat = secPerDripTarget /
( (float) timeAverage / (float) stepAverage );
                stepEstimateCheck =
round(stepEstimateFloat);
//              stepEstimate = secPerDripTarget/
(timeAverage/stepAverage); // took out the long
and it worked
//              long numberofSteps2 = average/
stepAverage;
              }

// calculate the overall average drip interval
// ----------------------------------------------------
------------------
            overallAverage = (totalDripIntervalTime /
totalDripDetects);
```

```
// reports here before we reset anything.
// ------------------------------------------------------
------------------
        report3(); // report drip detected and
some of the figures

// things that need to be reset at the end of the
calculation process
// ------------------------------------------------------
------------------
        extraSteps = 0;
        drip = false;

}

void dripDetect(){

        fillDrip = true; // flag used when filling the
machine

//  bounce,  if  another drip comes too soon
ignore it
// ------------------------------------------------------
------------------

        static unsigned long last_interrupt_time =
0;
```

```
        unsigned long interrupt_time = millis(); //
get the actual time.

            if (interrupt_time - last_interrupt_time >
25000){// If interrupts comes within 20 seconds
20000ms assume it's a bounce and ignore

              drip = true; // main flag , will trigger the
calculations and restarting the machine loop

              stepper.disable(); // turn off the motor
power

              dripTime_t = millis();
            dripInterval_t = dripTime_t -
previousDripTime_t;

            }

          last_interrupt_time = interrupt_time;
}

void checkForPause(){

  uint8_t buttons = lcd.readButtons();
    if (buttons & BUTTON_DOWN) {
//      powerOff();
```

```
        machineRunning = false;
         stopButton = true;
          say(“Paused”,””);
          Alarm.delay(3000);
}

}

void runMotor(){

                    stepper.enable(); // turn on the
motor power
//                   stepper.setMicrostep(randStep);
                    stepper.setMicrostep(16);

//           stepper.move(steps*randStep);
                      stepper.move(steps*16); // one
step is 1/16 microstep

}

void runFill(){

          fillDrip = false;
          stepper.setRPM(40); //motor RPM
          stepper.enable(); // turn on the motor
power
```

```
            stepper.setMicrostep(1);

            say(“ filling”, “”);
              for (int i=0; i <= 2400; i++){
              stepper.move(1);
              if (fillDrip) {  stepper.disable();  break; }  //
If there is a drip break out of the fill routine back
to the start menu
              }
            stepper.disable();

}

void noDrip(){

          extraSteps = 0;
//    Serial.println();
//    Serial.print(“End of a full loop without a drip
run noDrip Function”);
//    Serial.println();
//    Serial.pri
```

```
nt("------------------------------------------------");
//    Serial.println();
//    Serial.println();

          for (int i = 1; i < 500 + 1; i++){
              if (drip){return;} // if there is a drip
return to the machine loop which should go to do
calculations
              if (stopButton) { stopButton = false;
Serial.print("stop button pressed during noDrip
function"); break; }

              randStep = stepVals [random (0, 4)];
              stepper.enable(); // turn on the motor
power
              //  stepper.setMicrostep(4);
//              stepper.setMicrostep(randStep);
              stepper.setMicrostep(16);
//              stepper.move(randStep*randStep);
              stepper.move(1*16);

              extraSteps = extraSteps+1; // was 4
changed to 1 as think might hvae been adding 2
many steps
//              Alarm.delay(random (40,1000));
              Alarm.delay(1500);
```

```
 }
  stepper.disable();

  /// if after noDrip routine we still have no drip we
need to error back to the
  /// lcd display and error, maybe reset data of hold
 }

void readButtons(){
      uint8_t buttons = lcd.readButtons();

//      if (stopbutton){
//         lcd.setBacklight(RED);
// }

      if (buttons) {
        lcd.clear();
        lcd.setBacklight(WHITE);
        lcd.setCursor(0,0);

//        if (machineRunning){
//          say("machine","running");
//        }

// button UP
      if (buttons & BUTTON_UP) {
        say("button up","pressed");
```

```
      }

// button DOWN ( stop )
      if (buttons & BUTTON_DOWN) {
        say(“Start Menu”, “Make Selection”);
        Alarm.delay(250);  // using instead of delay,
we dont like delay because it stops thinking.
      }

// button LEFT  ( set seconds per drip )
    if (buttons & BUTTON_LEFT) {
        sayVar(“Drip Target” , secPerDripTarget);
        action = 1;
//      lcd.setBacklight(WHITE);

        counter++;
        if (counter > 6){
        counter = 0;
        }
          secPerDripTarget =
secPerDripArray[counter];
          sayVarSplit(“Set Drip Target “ , ‘ ‘ , “” , “”
, secPerDripTarget , “ Sec”); // text-int-text text-
int-text / add space for no int
        Alarm.delay(250);  // using instead of delay,
we dont like delay because it stops thinking.
```

```
    }

// button RIGHT  (run fill)
      if (buttons & BUTTON_RIGHT) {
          say(“Fill”,”Select to start”);
          action = 2;
         Alarm.delay(250);  // using instead of delay, we
dont like delay because it stops thinking.
    }

// botton SELECT
      if (buttons & BUTTON_SELECT) {
          switch (action) {
          case 1:
            machineRunning = true;
            sayVarSplit(“Target “, secPerDripTarget , “
Sec” , “”, ‘ ‘,  “running”); // text-int-text text-int-text /
add space for no int

//            runMachineLoop();

            return;
          case 2: //fill
            //  pumpRunning = true;
            runFill();
            say(“Start Menu”, “Make Selection”);
```

```
          break;

      }
    }
  }
}

void say(const char Line1[] , const char Line2[]){
  if (stopButton == true){
  lcd.setBacklight(RED);
  }
  else{
  lcd.setBacklight(WHITE);
  }
  lcd.clear();
  lcd.setCursor(0,0);
  lcd.print(Line1);
  lcd.setCursor(0,1);
  lcd.print(Line2);
  delay (250);
}

void sayVar(const char Line1[] , int Line2){

  lcd.setBacklight(WHITE);
  lcd.clear();
  lcd.setCursor(0,0);
```

```
  lcd.print(Line1);
  lcd.setCursor(0,1);
  lcd.print(Line2);
 }

  void sayVarSplit(const char lineOne1[] , int
lineOne2 , const char lineOne3[] , const char
lineTwo1[] , int lineTwo2 , const char lineTwo3[] ){
  // line 1 has 7 spaces, line 2 has 5 spaces line 3
has 4 spaces

  lcd.setBacklight(WHITE);
  lcd.clear();
  lcd.setCursor(0,0);
  lcd.print(lineOne1); // text
  if (lineOne2!=32) {lcd.print(lineOne2);} // int 32 is
a space so for nothing add a space when using
sayVar2
  lcd.print(lineOne3); // text
  lcd.setCursor(0,1);
  lcd.print(lineTwo1); // text
  if (lineTwo2!=32) {lcd.print(lineTwo2);} // int 32 is
a space so for nothing add a space when using
sayVar2
  lcd.print(lineTwo3); // text

 }
```

```
void report1(){ // duration steps events

  Serial.println();
  Serial.print
```

```
(F("-----------------------------------------------------------------------------------------------"));
  Serial.println();
Serial.print(F("LOOP START  report1 = start of machine for loop "));
  Serial.println();
  Serial.print
(F("-----------------------------------------------------------------------------------------------"));
  Serial.println();
  Serial.print("Target: ");
  Serial.print(secPerDripTarget);
  Serial.print(" Seconds");
  Serial.println();
  // ---------------------------------------------
    Serial.println();
    Serial.print("Requested Duration: ");
    Serial.print(secPerDripTarget);
    Serial.print(" ");
     Serial.print("Requested Steps: ");
    Serial.print(numberofSteps);
    Serial.println();
    Serial.print("Requested events: ");
    Serial.print(totalEvents);
    Serial.println();
  // ---------------------------------------------
  Serial.print(F("intervalReadings array "));
  int b;
for (b = 0; b < 4; b = b + 1) {
  Serial.print(intervalReadings[b]);
```

```
  Serial.print("+");
}
 Serial.print(" = ");
  Serial.print(intervalTotal);
  Serial.print("/");
  Serial.print(numIntervalReadings);
  Serial.print(" = ");
  Serial.print(timeAverage);
  Serial.print(F(" (timeAverage) "));
  Serial.println();
  Serial.print(F("stepReadings array "));

  int a;
for (a = 0; a < 4; a = a + 1) {
  Serial.print(stepReadings[a]);
  Serial.print("+");
}
  Serial.print(" = ");
  Serial.print(stepTotal);
  Serial.print("/");
  Serial.print(numStepReadings);
  Serial.print(" = ");
  Serial.print(stepAverage);
  Serial.print(F(" (stepAverage) "));
  Serial.println();
// ---------------------------------------------
```

```
// ----------------------------------------------------
--------------------
  Serial.println();
  Serial.print(secPerDripTarget);
  Serial.print("/(");
  Serial.print(timeAverage);
  Serial.print("/");
  Serial.print(stepAverage);
  Serial.print(") = ");
  Serial.print(secPerDripTarget / ( (float)
timeAverage / (float) stepAverage));
  Serial.println();
 // ----------------------------------------------------
----------------------

Serial.print("Steps Set to : ");
  Serial.print(numberofSteps);
  Serial.println();
  Serial.print(F("stepEstimateCheck = "));
  Serial.print(stepEstimateCheck);
  Serial.println();
//  Serial.print(randTotalEvents);
  Serial.print(totalEvents); // grabs the
randTotalEvents variable when the report1
function is called - see above
  Serial.print(F(" events"));
  Serial.println();
```

```
  Serial.print(F("stepsdone = "));
  Serial.print(stepsDone);
  Serial.print(F(" extrasteps = "));
  Serial.print(extraSteps);
  Serial.println();
Serial.println();
Serial.println();
}

void report2(){ // event number wait time and
steps and step value and  total steps done
Serial.print("Event:");
Serial.print(eventNumber);
Serial.print(" ");
Serial.print(" Wait: ");
Serial.print(waitTime);
Serial.print(" ");
Serial.print(" ");
  totalWaitTime = (totalWaitTime+waitTime);
  Serial.print(" ");
  Serial.print(totalWaitTime);
  Serial.print(" ");
Serial.print(" Steps: ");
Serial.print(steps);
Serial.print(" ");
Serial.print(" Step Value: ");
Serial.print(randStep);
```

```
Serial.print(“ “);
Serial.print(“ Total Steps Done: “);
Serial.print(stepsDone);
  Serial.print(“ “);
  Serial.print(“ “);
//  Serial.print(“ Total wait Done: “);
//  Serial.print(stepsDone);
//  Serial.print(“ “);
//  Serial.print(“ “);
//  Serial.print(“ Extra Steps “);
//  Serial.print(extraSteps);
//  Serial.print(“ “);
//  Serial.print(“drip flag “);
//  Serial.print(drip);
  Serial.println();

}

void report3(){  // report that drip detected and
the last interval length

          Serial.println();
         Serial.println();
          Serial.println();
          Serial.print(F(“-------------------------”));
          Serial.println();
         Serial.print(F(“DRIP DETECTED “));
```

```
            Serial.println();
            Serial.print(F("-------------------------"));
            Serial.println();
          Serial.print(F("last interval: "));
          Serial.print(dripInterval_t/1000);
          Serial.print(F(" seconds"));
            Serial.println();
            Serial.print(F("stepsdone = "));
            Serial.print(stepsDone);
            Serial.print(F(" extrasteps = "));
            Serial.print(extraSteps);
            Serial.println();
            Serial.print("Total drips ");
            Serial.print("totalDripIntervalTime/
totalDripDetects > ");
            Serial.print(totalDripIntervalTime);
            Serial.print(" seconds/");
            Serial.print(totalDripDetects);
            Serial.print(" drips = ");
            Serial.print("Total Average ");
            Serial.print(overallAverage);
            Serial.print(" seconds");
            Serial.println();
            Serial.println();

}
```

Testing out ways of thinking through a text.

Steyerl, Hito (n.d.) *'Is a Museum a Factory?* - Journal #7 June-August 2009 - e-flux'. [online]Available from: http://www.e-flux.com/journal/07/61390/is-a-museum-a-factory/ (Accessed 21 August 2017)

System

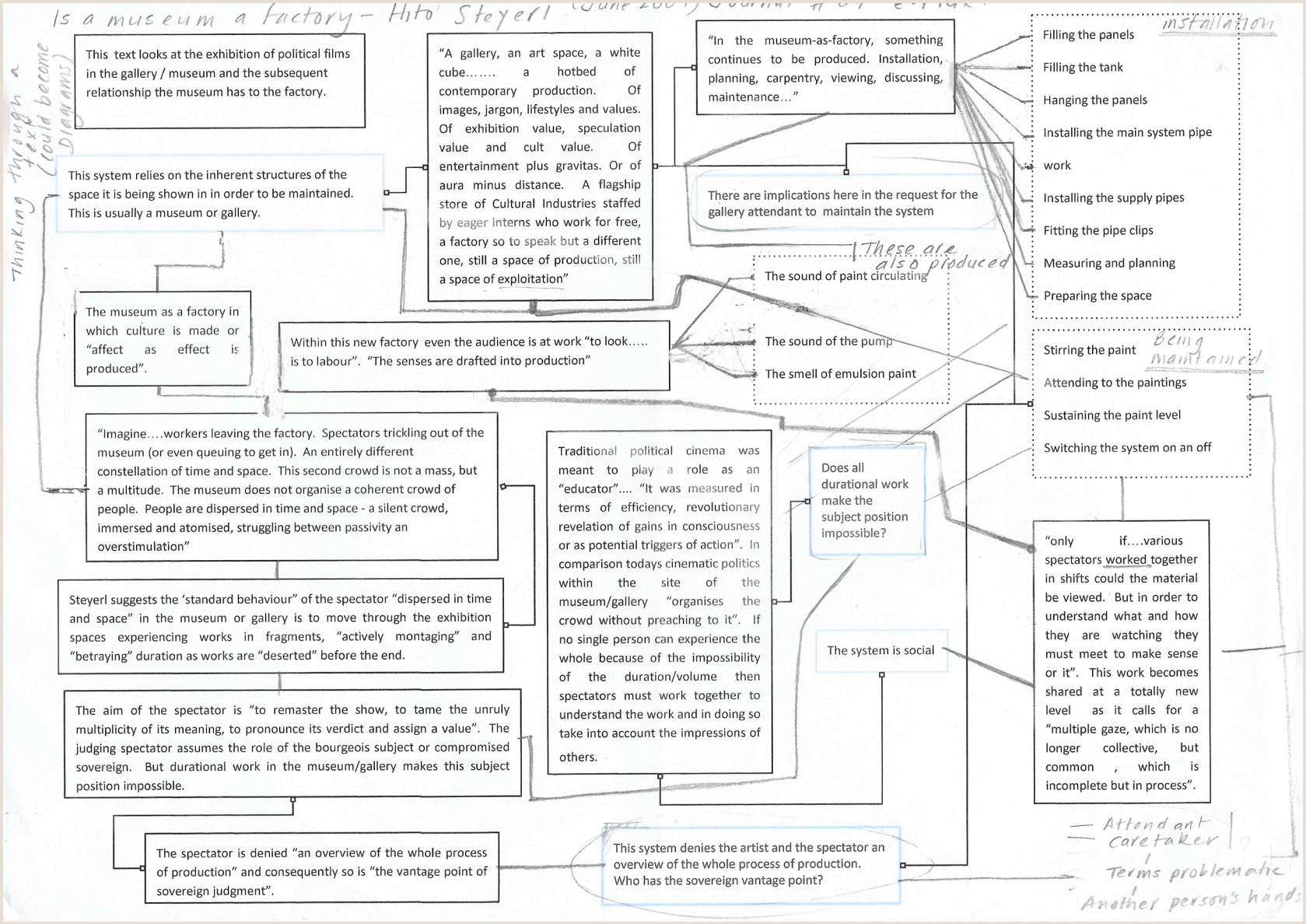
Is a museum a factory – Hito Steyerl
Thinking through a text (could become Diagrams)
This text looks at the exhibition of political films in the gallery / museum and the subsequent relationship the museum has to the factory.
This system relies on the inherent structures of the space it is being shown in in order to be maintained. This is usually a museum or gallery.
The museum as a factory in which culture is made or "affect as effect is produced".
"A gallery, an art space, a white cube……. a hotbed of contemporary production. Of images, jargon, lifestyles and values. Of exhibition value, speculation value and cult value. Of entertainment plus gravitas. Or of aura minus distance. A flagship store of Cultural Industries staffed by eager interns who work for free, a factory so to speak but a different one, still a space of production, still a space of exploitation"
"In the museum-as-factory, something continues to be produced. Installation, planning, carpentry, viewing, discussing, maintenance…"
Filling the panels
Filling the tank
Hanging the panels
Installing the main system pipe work
Installing the supply pipes
Fitting the pipe clips
Measuring and planning
Preparing the space
installation
There are implications here in the request for the gallery attendant to maintain the system
These are also produced
The sound of paint circulating
The sound of the pump
The smell of emulsion paint
Within this new factory even the audience is at work "to look….. is to labour". "The senses are drafted into production"
Stirring the paint
Attending to the paintings
Sustaining the paint level
Switching the system on an off
being maintained
"Imagine….workers leaving the factory. Spectators trickling out of the museum (or even queuing to get in). An entirely different constellation of time and space. This second crowd is not a mass, but a multitude. The museum does not organise a coherent crowd of people. People are dispersed in time and space - a silent crowd, immersed and atomised, struggling between passivity an overstimulation"
Traditional political cinema was meant to play a role as an "educator"…. "It was measured in terms of efficiency, revolutionary revelation of gains in consciousness or as potential triggers of action". In comparison todays cinematic politics within the site of the museum/gallery "organises the crowd without preaching to it". If no single person can experience the whole because of the impossibility of the duration/volume then spectators must work together to understand the work and in doing so take into account the impressions of others.
Does all durational work make the subject position impossible?
"only if….various spectators worked together in shifts could the material be viewed. But in order to understand what and how they are watching they must meet to make sense or it". This work becomes shared at a totally new level as it calls for a "multiple gaze, which is no longer collective, but common , which is incomplete but in process".
Steyerl suggests the 'standard behaviour" of the spectator "dispersed in time and space" in the museum or gallery is to move through the exhibition spaces experiencing works in fragments, "actively montaging" and "betraying" duration as works are "deserted" before the end.
The system is social
The aim of the spectator is "to remaster the show, to tame the unruly multiplicity of its meaning, to pronounce its verdict and assign a value". The judging spectator assumes the role of the bourgeois subject or compromised sovereign. But durational work in the museum/gallery makes this subject position impossible.
The spectator is denied "an overview of the whole process of production" and consequently so is "the vantage point of sovereign judgment".
This system denies the artist and the spectator an overview of the whole process of production. Who has the sovereign vantage point?
Attendant
Caretaker
Terms problematic
Another person's hands

Joselit, David (2009)
Painting Beside Itself. October 130, pp. 125–134.

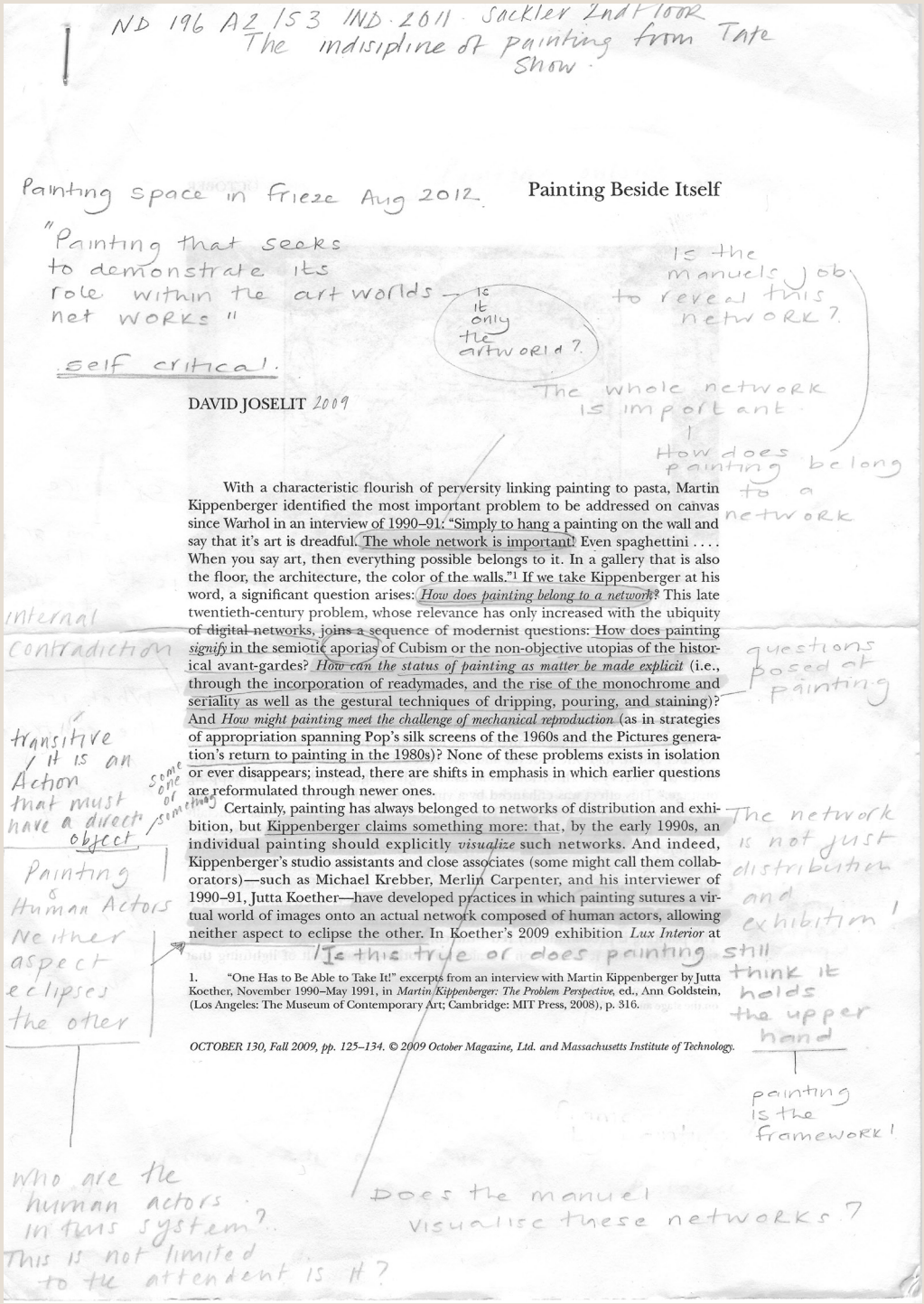

ND 196 A2 I53 IND·2011 Sackler 2nd floor
The indisipline of painting from Tate Show

Painting space in Frieze Aug 2012

"Painting that seeks to demonstrate its role within the art worlds net works"

self critical.

Is it only the artworld?

Is the manuels job to reveal this network?

The whole network is important

How does painting belong to a network

Painting Beside Itself

DAVID JOSELIT 2009

With a characteristic flourish of perversity linking painting to pasta, Martin Kippenberger identified the most important problem to be addressed on canvas since Warhol in an interview of 1990–91: "Simply to hang a painting on the wall and say that it's art is dreadful. The whole network is important! Even spaghettini . . . . When you say art, then everything possible belongs to it. In a gallery that is also the floor, the architecture, the color of the walls."[1] If we take Kippenberger at his word, a significant question arises: *How does painting belong to a network*? This late twentieth-century problem, whose relevance has only increased with the ubiquity of digital networks, joins a sequence of modernist questions: How does painting *signify* in the semiotic aporias of Cubism or the non-objective utopias of the historical avant-gardes? *How can the status of painting as matter be made explicit* (i.e., through the incorporation of readymades, and the rise of the monochrome and seriality as well as the gestural techniques of dripping, pouring, and staining)? And *How might painting meet the challenge of mechanical reproduction* (as in strategies of appropriation spanning Pop's silk screens of the 1960s and the Pictures generation's return to painting in the 1980s)? None of these problems exists in isolation or ever disappears; instead, there are shifts in emphasis in which earlier questions are reformulated through newer ones.

Certainly, painting has always belonged to networks of distribution and exhibition, but Kippenberger claims something more: that, by the early 1990s, an individual painting should explicitly *visualize* such networks. And indeed, Kippenberger's studio assistants and close associates (some might call them collaborators)—such as Michael Krebber, Merlin Carpenter, and his interviewer of 1990–91, Jutta Koether—have developed practices in which painting sutures a virtual world of images onto an actual network composed of human actors, allowing neither aspect to eclipse the other. In Koether's 2009 exhibition *Lux Interior* at

Is this true or does painting still think it holds the upper hand

1. "One Has to Be Able to Take It!" excerpts from an interview with Martin Kippenberger by Jutta Koether, November 1990–May 1991, in *Martin Kippenberger: The Problem Perspective*, ed., Ann Goldstein, (Los Angeles: The Museum of Contemporary Art; Cambridge: MIT Press, 2008), p. 316.

OCTOBER 130, Fall 2009, pp. 125–134. *© 2009 October Magazine, Ltd. and Massachusetts Institute of Technology.*

internal contradiction

questions posed at painting

transitive / it is an Action that must have a direct object

some one or something

Painting & Human Actors Neither aspect eclipses the other

The network is not just distribution and exhibition!

painting is the framework!

Who are the human actors in this system? This is not limited to the attendent is it?

Does the manuel visualise these networks?

System



Jutta Koether. Hot Rod (after Poussin). *2009. Courtesy of Reena Spaulings Fine Art. Photograph by Farzad Owrang.*

Reena Spaulings Gallery in New York, for instance, painting functioned as a cynosure of performance, installation, and painted canvas. The exhibition centered on a single work mounted on an angled floating wall—much like a screen—which, as Koether put it, had one foot on and one foot off the raised platform that delineates the gallery's exhibition area, as though caught in the act of stepping onstage.[2] This effect was enhanced by a vintage scoop light trained on the painting that had been salvaged from The Saint, a famous gay nightclub that officially closed in 1988 largely as a consequence of the AIDS crisis. The canvas itself, *Hot Rod (after Poussin)* (2009), is a nearly monochromatic reworking of Poussin's *Landscape with Pyramus and Thisbe* (1651), representing a Roman myth centered on the extinction of love—and life—caused by the misreading of visual cues (Pyramus sees Thisbe's ruined veil and assumes she has been murdered by a lioness, leading to his suicide, and then, upon finding him dead, Thisbe's own). The painting is predominantly red—the color of blood and anger (and by extension AIDS)—and it centers on a scaled-up motif—a giant bolt of lightning that

2. The exhibition's press release describes the painting as "installed on its own wall, with one foot on the stage and one foot off . . . "

cynosure
1
A person or thing that is the centre of attention

What is the centre of attention here?
1
The Manuel
The object

installed on its own wall

Painting outside Itself

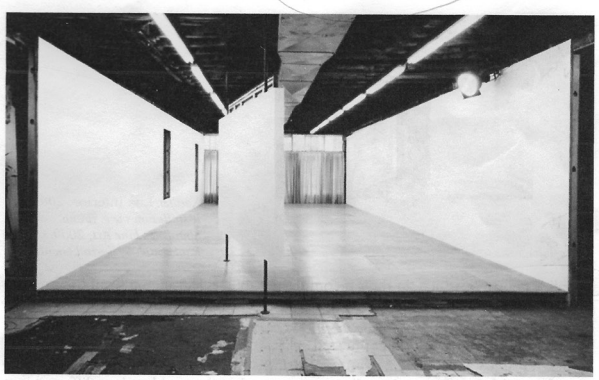

Koether. Lux Interior. *2009. Installation view, Reena Spaulings Fine Art, 2009. Photograph by Farzad Owrang.*

had played a much less prominent role in Poussin's canvas. This jagged form divides the composition like a scar, around which brushstrokes coagulate. The marks are by turns tentative and assertive, something like a caress before a slap. Indeed, inspired by T. J. Clark's extended reading of Poussin in *The Sight of Death* (2006), Koether develops a gesture that is deeply ambivalent: equally composed of self-assertion and interpretation, her strokes are depleted of expressive urgency by marking the elapsed time between Poussin's 1651 and her 2009.[3] Three lecture performances accompanied the exhibition in which Koether moved around and even under the wall that supported her canvas—her body and the bright anger of her recitation of collaged text furnished a frame for the canvas. The painting's own presence as a personage ~~(or interlocutor)~~ was further enhanced by strobe lights flashing onto it in different configurations during these live events as if painting and painter had encountered one another in a club.[4]

Whose is this language?

less detail about these elements/ A different language

Lux Interior offered a sophisticated response to the question with which I began: *How does painting belong to a network?* It's worth pausing to consider how difficult it is to

3. See T. J. Clark, *The Sight of Death: An Experiment in Art Writing* (New Haven: Yale University Press, 2006).

4. Music is a fundamental dimension of Koether's practice as an artist. *Lux Interior,* for instance is named after the front man of the punk band The Cramps, whose lyrics are featured in the archive compiled by Koether of various "source materials" that accompanied the exhibition.

The painting as interlocutor

a person who takes part in the dialogue.

System



Koether. Lux Interior. *2009. Installation view, Reena Spaulings Fine Art, 2009. Photograph by Farzad Owrang.*

visualize networks, which, in their incomprehensible scale, ranging from the impossibly small microchip to the impossibly vast global Internet, truly embody the contemporary sublime. One need only Google "Internet maps" to turn up Star Trek–inspired images of interconnected solar systems that do little to enhance one's understanding of the traffic in information but do much to tie digital worlds to ancient traditions of stargazing. Koether approaches the problem in a different way. Instead of attempting to visualize the overall contours of a network, she actualizes the *behavior of objects within networks* by demonstrating what I would like to call their transitivity. The Oxford English Dictionary gives one definition of "transitive" as "expressing an action which passes over to an object." I can think of no better term to capture the status of objects within networks—which are defined by their circulation from place to place and their subsequent translation into new contexts—than this notion of *passage*.[5] In *Lux Interior*, Koether established such transitivity along two axes. First, each brushstroke of her reenactment of Poussin's *Landscape with Pyramus and Thisbe* embodies the passage of time. This diachronic axis of painting-as-medium is joined to a second synchronic kind of passage which moves out from painting-as-cultural artifact to the social networks surrounding it, as indicated both by *Hot Rod*'s behavior as a personage (it "steps" on stage, is lighted by disco lamps, etc.) as well as the artist's performance as the painting's discursive and bodily interlocutor in her three lecture events. * *

5. Given Marcel Duchamp's fascination with passage within painting, not only in works such as *Passage from Virgin to Bride* (1912) but in *The Large Glass* (1915–23) and even through the peregrinations of the readymades over their "lives" this seems a good moment to acknowledge the importance of Dada painting to the contemporary development I am sketching out. Whether the influence is direct or not, and I'm somewhat doubtful it is, both Dada and so-called neo-Dada artists were exploring how painting might embrace networks beyond itself. For example, see George Baker, *The Artwork Caught by the Tail: Francis Picabia and Dada in Paris* (Cambridge, Mass.: MIT Press, 2007), especially chapter 2, "The Artwork Caught by the Tail: Dada Painting"; and Branden W. Joseph, *Random Order: Robert Rauschenberg and the Neo-Avant-Garde* (Cambridge, Mass.: MIT Press, 2003). Thierry de Duve has of course written importantly on the relationship between Duchamp's painting and the readymade. These ideas are collected in *Kant After Duchamp* (Cambridge, Mass.: MIT Press, 1996). In my own *Infinite Regress: Marcel Duchamp 1910–1941* (Cambridge, Mass.: MIT Press, 1998) I address the question of Duchamp's painting in different ways.

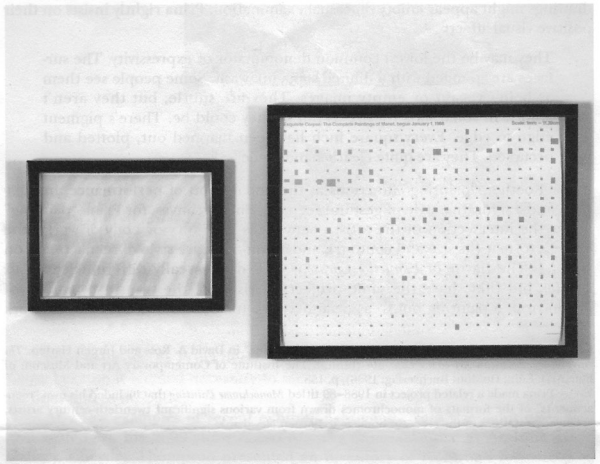

Stephen Prina. Exquisite Corpse: The Complete Paintings of Manet, 206 of 556, Mme. Edouard Manet et Paysage à Berck-sur-Mer (Manet's Wife and Landscape at Berck-sur-Mer) 1873. *2004.*

passages internal to a canvas and those external

What defines transitive painting, of which Koether represents only one "mood," is its capacity to hold in suspension the passages internal to a canvas, and those external to it. In this regard, painting since the 1990s has folded into itself so-called "institutional critique" without falling into the modernist trap of negation, where works on canvas are repeatedly reduced to degree zero while remaining unique objects of contemplation and market speculation. From this cooler perspective, Stephen Prina stands in a position analogous to Kippenberger vis-a-vis younger artists such as Cheyney Thompson, Wade Guyton, and R. H. Quaytman. In 1988, Prina initiated an ongoing project titled *Exquisite Corpse: The Complete Paintings of Manet*, in which an offset lithograph representing a visual index of Édouard Manet's corpus of 556 works (arranged to scale in a grid of "blanks" based on the contour and dimensions of each painting or drawing) was exhibited next to a sequence of monochrome sepia ink drawings made by Prina to the exact size and format of corresponding works in Manet's oeuvre. While these

Not flat?

TRANSITIVE PAINTING

System

System

drawings might appear empty on casual examination, Prina rightly insists on their positive visual affect:

> They may be the lowest common denominator of expressivity. The surfaces are sponged with a diluted sepia ink wash. Some people see them as being vacant or empty images. They are subtle, but they aren't empty. In some ways they're as full as they could be. There's pigment edge to edge. Every square inch has been mapped out, plotted and occupied. They are quite clearly hand-made . . .[6]

If, for Koether, "painting" functions as the nodal point of performance, installation, and a figurative style of gestural reenactment on canvas, for Prina "painting" marks the intersection of the artist's oeuvre (as inventory or body of work), the object's format (its size and contour), and a non-objective style of reenactment on paper.[7] The flavor of *Exquisite Corpse* is thus dramatically different from *Lux Interior*, but they share the same project: to visualize the transitive passage of action from a painting out to a social network (or body), and from this network

6. Elisabeth Sussman and David Joselit, "Stephen Prina" in David A. Ross and Jürgen Harten, *The BiNational: American Art of the Late '80s* (Boston: The Institute of Contemporary Art and Museum of Fine Arts; Köln: DuMont Buchverlag, 1988), p. 158.
7. Prina made a related project in 1988–89 titled *Monochrome Painting* that included his own "reenactments" of the formats of monochromes drawn from various significant twentieth-century artists, arranged as stations of the cross (in homage to Barnett Newman).

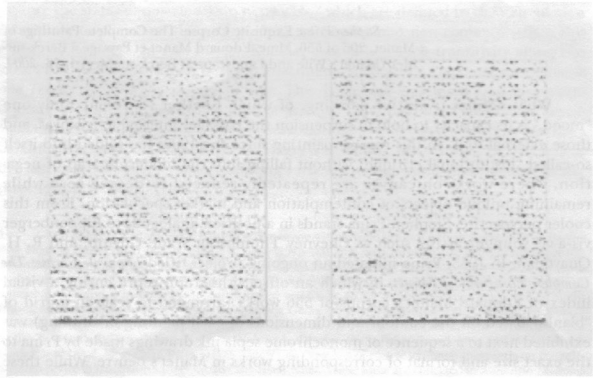

Cheyney Thompson. Chromachrome 8 (5BG/5R) diptych. *2009. Courtesy Andrew Kreps Gallery, New York.*

Painting → Social Network or Body

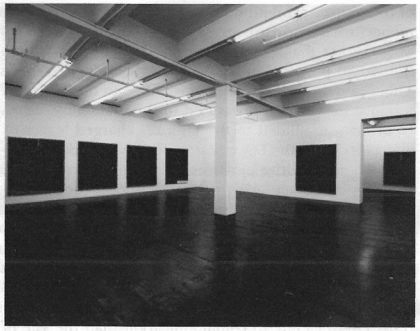

Wade Guyton. Installation view, Friedrich Petzel Gallery, 2007.

back onto painting. As Prina declares, "I entitled the Manet project *The Exquisite Corpse* because it seemed necessary to see a complete body of work, in relation to his body and to my body . . ."[8]

As a few examples of recent exhibitions suggest, transitive painting is rich and varied. In his 2009 show *Robert Macaire Chromachromes*, at Andrew Kreps Gallery, Cheyney Thompson presented an inventory of painting's formats (i.e., the diptych, the edge [zip], or the tondo) each of which delineated an optically charged allover field composed of an enlarged pattern of the linen weave on which it was painted, executed by hand in complementary color pairs. In Wade Guyton's 2007 exhibition at Friedrich Petzel a readymade computer format—namely, a rectangle drawn and filled in using Photoshop—served as the source for a series of black monochrome paintings generated by ink-jet printer. Guyton installed a temporary black floor in the gallery whose oddly provisional quality gave the viewer a bodily hint of the DIY digital aesthetic, rising up through her feet as though experiencing a latter day Carl Andre floor piece.[9] And as R. H. Quaytman's contribution to a collaborative 2008 exhibition with Rhea Anastas and Amy Sillman, *From One O to the Other*, at Orchard, she exhibited paintings whose motifs were drawn from photographs of the gallery's Lower East side space, overlain by silk screens of optically assertive patterns that made it difficult to concentrate on the submerged motifs. Quaytman's paintings were organized as a "chapter" and archived in a storage unit available for visitors to browse.[10] In each

8. Sussman and Joselit, "Stephen Prina," p. 157.
9. For an excellent account of Guyton's work, see Johanna Burton, "Rites of Silence: On the Art of Wade Guyton," *Artforum* XLVI, no. 10 (Summer 2008), pp. 364–73, 464.
10. I give a fuller discussion of Quaytman's piece in my "Institutional Responsibility: The Short Life of Orchard," *Grey Room* 35 (Spring 2009), pp. 108–15.

System

networks beyond itself.
or within its own History

of these three exhibitions, the rhetoric of modern painting (the allover field, the monochrome and Op) served to suture spectators to extra-perceptual social networks rather than merely situating them in a phenomenological relationship of individual perception, as orthodox modernist criticism would have it. With Thompson, optical sensation was linked to the history of painting's conventional formats; for Guyton, it was tied to the mutability of digital information; and for Quaytman, it alluded to the ethically charged legacy of gentrification by artists and galleries on the Lower East Side of New York.

suture spectators to extra perceptual social networks

These transitive practices have gained currency because they offer a way out of a particularly enduring critical dead end: the reification trap. As the most collectible type of art, which combines maximum prestige with maximum convenience of display (both for private and institutional collectors), painting is the medium most frequently condemned for its intimate relation to commodification. Needless to say, this is an accurate diagnosis, but it is equally true that paying an artist (or an art historian for that matter) a fee in exchange for services rendered such as a lecture, performance, or temporary installation is no less a transaction leading to commodification than the sale of a painting—even if less money changes hands. The problem with the term "reification" is that it connotes the permanent arrest of an object's circulation within a network: it is halted, paid for, put on a wall, or sent to storage, therefore permanently crystallizing a particular social relation. Transitive painting, on the other hand, invents forms and structures whose purpose is to demonstrate that once an object enters a network, it can never be fully stilled, but only subjected to different material states and speeds of circulation ranging from the geologically slow (cold storage) to the infinitely fast. A Poussin might land in the hands of Jutta Koether, or Stephen Prina might seize the entire oeuvre of Manet.

? contested
Sarah Kate
Painting in Time

?

one work unlocks the other ?

I have argued elsewhere that Dada's diagrammatic drawings, particularly those of Francis Picabia, disrupt the representation of stable objects, and by extension, the stasis of reification.[11] Indeed, if we recall the definition of transitivity I introduced above—"expressing an action which passes over to an object"—a close relationship between the transitive and the diagrammatic might be anticipated, since diagrams are entirely devoted to accommodating *passages* from one element to another. Indeed, recent practices of transitive painting are complemented by a contemporaneous engagement with the diagram. In paintings by Amy Sillman and Thomas Eggerer, to name only two of many possible examples, a figurative element (in Sillman's case this is usually a drawing by her own hand and in Eggerer's, a photographic motif taken from a magazine or book) is submerged in a field of gestural vectors. Whether in a ludic, or a despairing mood, figuration

instruction ?
code ?

Dean Kenning

11. See my "Dada's Diagrams," in *The Dada Seminars,* ed. Leah Dickerman, with Matthew S. Witkovsky (Washington: The National Gallery of Art; New York: D.A.P., 2005), pp. 221–39. Benjamin H. D. Buchloh develops a more disciplinary understanding of the diagrammatic in his "Hesse's Endgame: Facing the Diagram," in *Eva Hesse Drawing,* ed., Catherine de Zegher (New York: The Drawing Center; New Haven: Yale University Press, 2006), pp. 117–50.

is partially digested into pure passage. A fragment obtrudes here and there, just to remind us of the enormity of those procedures of abstraction that also characterize the digital network's translation of cultural artifacts into code. Transitivity is a form of translation: when it enters into networks, the body of painting is submitted to infinite dislocations, fragmentations, and degradations. As Kippenberger suggested nearly twenty years ago, these framing conditions cannot be quarantined. Painting is beside itself.

Read Again

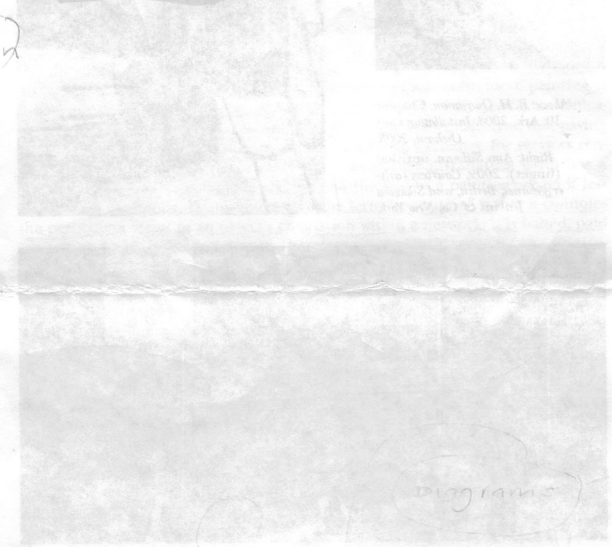

Knots

Neurotic

System

Working out the coloured tab system
with the graphic designer (Charlie).



System

Constructing the Panels

Constructing the Panels

Tools and equipment:

Old blanket
Polythene sheet x5
Flat head screwdriver
Dry clean cloth
Strong PVA glue
1” Paint brush
Staple gun and 8 - 10mm heavy duty staples.
Scalpel and blade
Scissors
Wood filler
A range of sandpapers of various grits from course to smooth.
Sanding block
Robersons acrylic primer 2.5 litre
4” roller and tray
Lascaux acrylic sizing 1ltr
Priming brush - 22mm
8 x 4.5 x 50mm screws.
4 x 5mm plywood 450mm x 450mm
1.4 x 20mm panel pins
Hammer
Nail pound
16 x 44mm x 44mm planed square edge timber x 450 mm lengths
4 x mitre corner clamps
4m x 50mm screws x 32
4.5mm drill bit
Water
Plastic mixing jug
Mixing device

Constructing the Panels

[11.0] This is not convenient.

21.58 6 Apr:
[11.0] Does this work avoid 'the reification trap'? (DJ, 2009)
Circulate the paintings.
This circulates
Retelling: David Joselit's Painting Beside Itself.

13.18 15 Apr:
Retelling Claire Bishop's Antagonism and Relational Aesthetics
'the presence of what is not me renders my identity precarious and vulnera- ble, and the threat that the other represents transforms my own sense of self into something questionable' (CB, 2012)

[11.0] The staples penetrate the wall too deeply.

Removing them is awkward and takes too much time. They are sharp and break off in the pliers. Small fragments of them remain stuck in the wall. What if they are just left there? Is this a lack of care or freedom from the demands of the institution to behave well.

13.45 11 Apr:
Retelling Gerald Raunig's What is Critique?
'Critique does not have the premises of a thinking that conclusively explains: and this is what is to be done now. It must be an instrument for those who fight, resist, and who no longer want what is' (GR, 2008)

[11.0] The top edge of the pocket is

[11.0] Find a large flat surface to work on. Cover the surface with an old blanket and a clean polyethene dust sheet. Using a flat head screwdriver remove the staples from the edges of one piece of the primed canvas fixed on the wall (Drawing 11.0). In order to prevent the canvas dropping to the floor or creasing remove the staples from the bottom edge first. Carry the canvas carefully to the flat working surface. Lay the canvas down flat then fold it in half along its longest length (Drawing 11.1). Do not crease the fold until the edges of the canvas are fully aligned. The crease must be perfect so every effort should be made not to crack the vulnerable primed surface of the canvas as it folds. Use a dry clean cloth to run along the creased edge. Turn the folded canvas over and inspect both outer sides to establish which one will form the front facing surface of the finished panel. Look for blemishes on the surface caused by congealed primer or areas that have not coated sufficiently. Select the side with the fewest faults as the front surface and lay this flat down onto the polythene dust sheet covering the table.

Caution
This is not a hylomorphic model of making.

Gently place a panel face down onto the folded canvas making sure that the split batten is at the top and

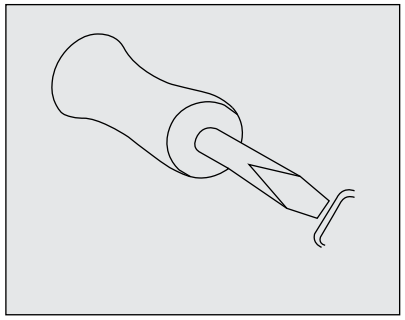

Drawing: 11.0

that this top edge perfectly aligns with the creased fold on the canvas below. Position the panel centrally so there in an even amount of canvas either side (Drawing 11.2).
[11.1] With a brush coat the outside edges of the panel with a thick layer of PVA glue. Do not allow

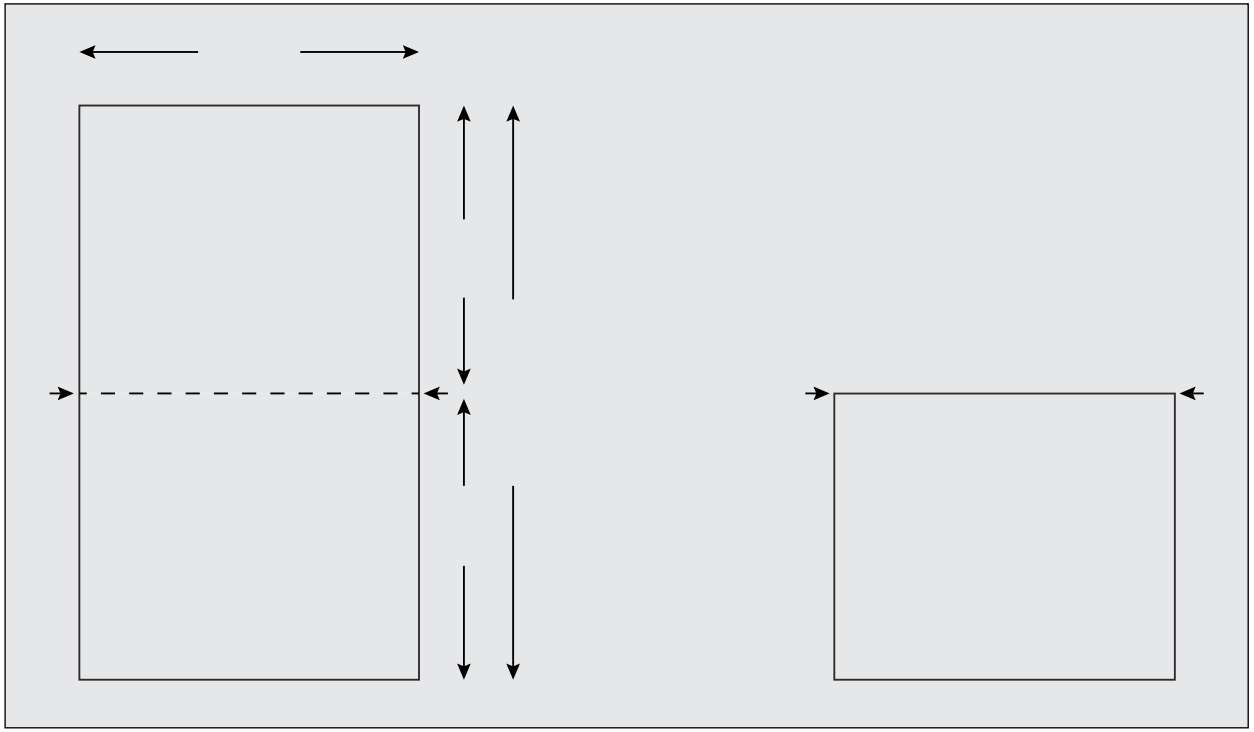

Drawing: 11.1

Constructing the Panels

formed by a fold not a cut.

11.0 The double thickness of the canvas pocket is reassuring.
If there are unsealed pores in one side there is another layer for the paint to penetrate.
Retelling: Tests in the ‘paint methods room’ with Tim.
The weave of the canvas is a distraction. But the strength of this material is essential to the function of the object.

11.1 Who said making is banal?

11.3 Leave a pinhole sized section of the panel unsealed.

This imperfection allows the glue that binds the plywood together to seep through the primed surface. Over time the painted edge of the panel stains. The stain is the colour of unprimed ply.

18.21 20 Mar:
This is not an interpretation of the original.

11.8 Stretch the canvas on an imperfect wall. As the primer dries its sticks to the surface below. Forget the plastic sheet. Stick the canvas to the wooden board. Remove the dry canvas pulling with it splinters. Start over.

11.8 As the primer dries, the canvas stretches tighter. The tightening surface reveals the imperfections of the wall underneath.

11.8 The canvas forms the

any glue on the outside surface of the canvas. Coat liberally and then fold the double thickness canvas over each edge of the panel and onto the glued side. Apply more glue and hold each edge of the canvas tight but not so tight that it affects the alignment of the top edge. Fold one side at a time, applying plenty of glue with the brush then staple the edge down onto the panel as flat as possible. Just put one or two staples in centrally at first until every edge of the canvas has been glued and folded over neatly. Continuously check the canvas on the edges of the panel to ensure it remains as flush as possible. Pull the canvas gently. Glue, check and then staple, repeat this process until all the edges of the panel are covered. Leave 100mm of canvas unstapled at the corners to allow adequate space for the folds. Apply glue at the corners and fold in each one making sure the canvas is tucked in and the fold of canvas sit along the side edge of the panel not the bottom side.

Caution
Keep hands and work surfaces clean to ensure the panels remain unblemished.

As the folds are created, apply glue into the creases and staple to secure (Drawing 11. 3a and b). Cut off all excess canvas with a very sharp scalpel. To avoid the panel sitting forward from the wall in any way, or anything disrupting the clean edge, there must be no threads hanging from the support and no bulges caused by a bulk of canvas that will make it lean forward. Pay close attention to the top edge of t

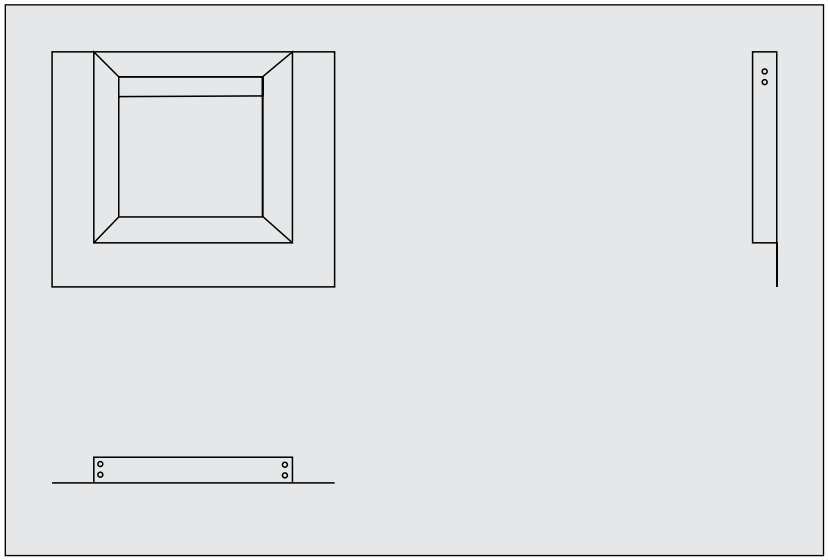

Drawing: 11.2

he canvas where the pocket is formed. Ensure the edge is neatly aligned with the top of the panel and there is no sagging. Seal the whole back securely with a second layer of staples to give added security (Drawing 11.4). Repeat this process until all 4 panels are covered.

Caution
The staples and glue form the seal that holds 20 litres of paint filled inside each painting. Be disciplined about this. Precision is everything. Take time. Be over cautious.

11.2 Treat each panel with primer using a 4” roller and tray in order to avoid the marks a paint brush might leave. Apply one coat and then leave

Caution
Do not use a paint brush. There should be no brush marks evident on the surface.

to dry. Give the surface a light sanding before applying the next coat. Make sure to cover the entire front surface and edges. Apply a minimum of 3 coats until the whole surface of the panel is evenly covered.

11.3 Use a brush to apply a coat of acrylic size to all the panels. Cover the front and sides completely making sure not to miss a section. When the sealer dries it leaves minimal trace of where it has already been applied, so pay close attention and apply a second coat in the case that there is a slight chance a spot may have been missed.

11.4 Lay the panels face up on a polythene sheet. Make sure they are at a height that is good to work at and that they are all within easy reach. Fill all the holes, cracks and imperfections on the front and edges of each panel with wood filler. Sand the filler back with sandpaper,

Constructing the Panels

front facing skin that the wet paint runs down and acts as a membrane to hold the liquid paint.

11.8 This surface reports on its own preparation and subsequent care.

11.8 There must be a flaw on Canvas 4.

11.8 Retelling: A lack of care. Paint seeps through any unsealed pores in the surface of the canvas.
With time the leaks dry up and form paint scabs. The paintings heal themselves.

16.40 9 Apr:
This is of and about.

Retelling: Katherine Hayles's How do we Become Post Human?
'When Kurt Godel invented a method of coding that allowed statements of number theory also to function as statements about number theory, he entangled that which generates the system with the system' (KH, 1999)

This is a new system.

11.8 This makes a case for physical persistence.

11.9 This relies on those who know something else.

start with 400 grit but move to a finer 600 grit to finish. Ensure the panel is as flawless as possible. Pay particular attention to the gap between the plywood front and planed timber edges and the tiny pin holes that attach the front ply to the support.

11.5 Fit the other half of each split batten to the inside top of each panel. Ensure that the centre line of each batten is perfectly in line with the centre of the panel. Fix the batten to the top edge of the panel making sure that each batten is perfectly flush with the 44mm squared wooden support and the side with the largest surface is facing away from the ply front. Glue in place with wood glue and then screw with 2 x 4.5 x 50mm screws.

11.6 Lay each piece of cut plywood onto a support. Rotate them and swap them round until each one is a perfect fit with the support below. Apply a thick coat of glue to the top surface of the supports and stick down each plywood top. Run a finger along each edge to catch any drips of glue as it squeezes out when pressure is applied.

Caution
Avoid splinters.

Hammer 4 - 6 panel pins in along each edge to secure the tops in place. Use a nail pound and a hammer to slightly bury each panel pin into the surface of the ply. Sand the edge of the plywood with medium grit sandpaper until they are smooth and flush with the edges of the support.

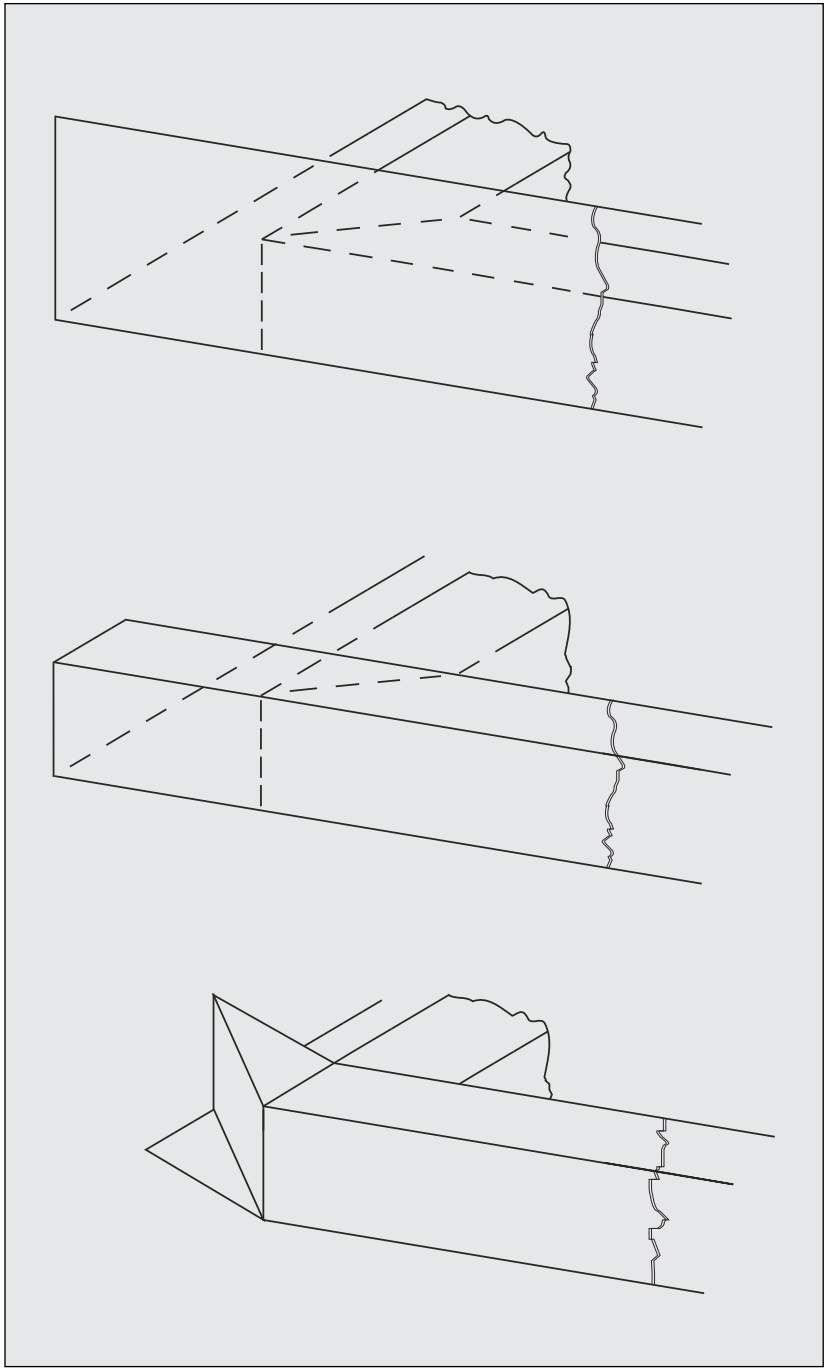

Drawing: 11.3a

Constructing the Panels

11.7 Mitre the edges of all 16 x 450 mm lengths of 44mm x 44mm planed square edge timber to 45°. Drill two holes with a 4.5mm drill bit into both ends of 16 of the pieces of mitred wood and counter sink the holes. Make one support at a time using four mitre corner clamps. Before clamping four lengths (2 with holes drilled) in place to form a perfect square apply wood glue to each mitre. Screw the supports together using 50mm screws. Make sure that the sides don't turn and move out of place as the screws tighten. Wait for the glue to dry before removing the support from the clamps and starting another.

11.8 Cut 4 pieces of cotton duck canvas 800mm x 1200mm. Select a large surface area of flat wall to work on, staple up the polythene sheet making sure that it is flat. Staple 1 piece of canvas to the plastic sheet and the wall, staple as close to the outside edge of the canvas as possible.

Caution
Take care to use enough staples so that the canvas is pulled flat to avoid creases.

With water, dilute 1 litre of primer to the consistency of single cream. Using the priming brush, prime the front surface of the canvas. For the first application of the primer, work in circular motions across the canvas until the whole surface is coated. Allow this first coat to dry and sand the surface of the canvas slightly before applying a second coat of undiluted primer. Cover the whole surface area of the canvas evenly and allow to dry. Apply a third coat of primer. Remove the staples

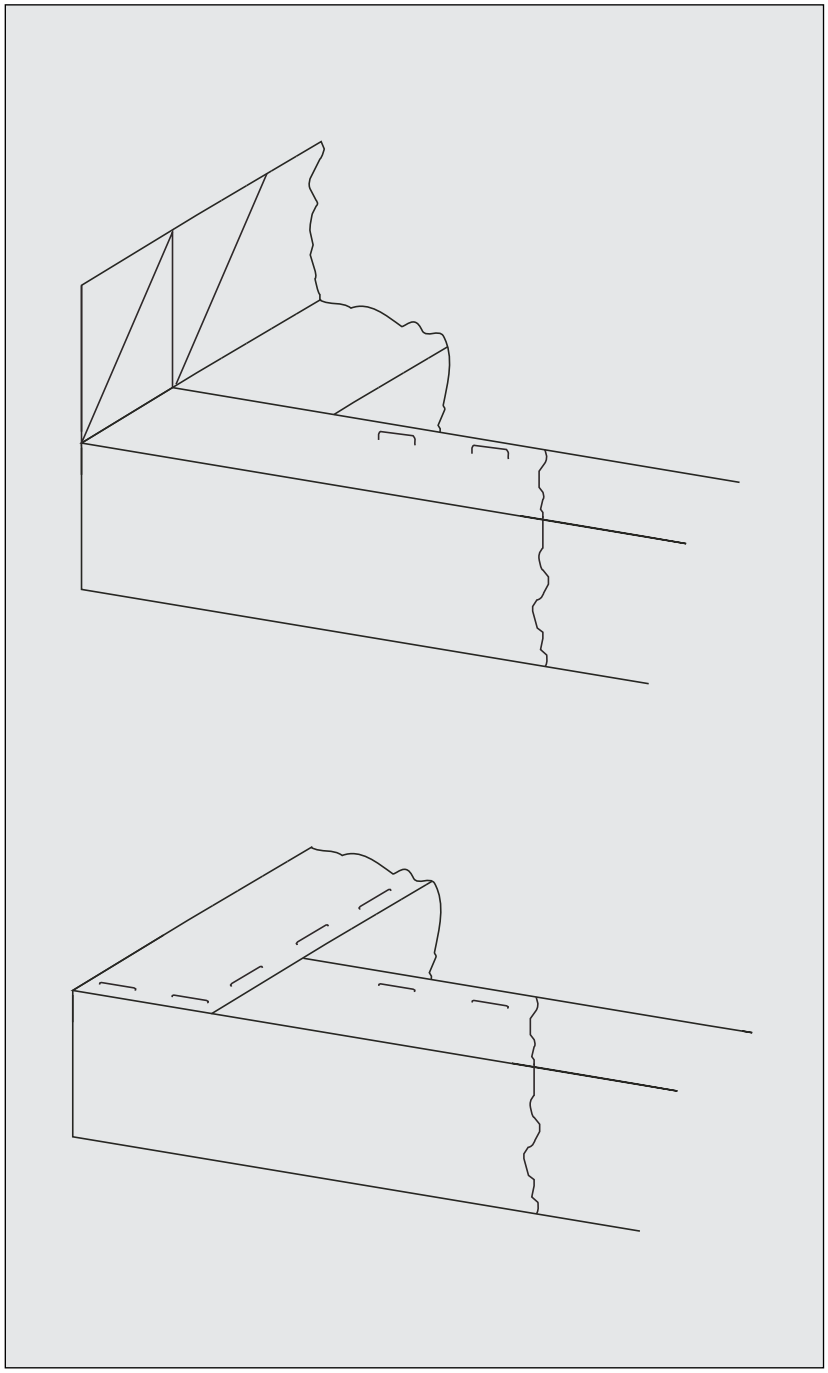

Drawing: 11.3b

Constructing the Panels

from the edge of the canvas using a flat head screwdriver. Turn the canvas so that the primed surface is to the wall. Take care that the polythene sheet is still intact and attach the canvas to the wall. Staple the canvas at the outside edge so that the canvas is pulled flat. Be cautious not to crack the previously primed surface. Prime this side 3 times, sanding the canvas after each coat is dry. For the final coat use the 4” roller to apply the primer to avoid distinct brush marks. Repeat this process until all four pieces of canvas have been treated on both sides. Take extra care, the work is dependent on this thorough sealing process, it is essential to the successful functioning of the system.

[11.9] Source the materials and tools needed for building the crates and panels. Begin to organise operational support for the installation. Start a conversation with those that will maintain and care for the work. Discuss the commitment this work needs and its reliance on others to make it work.

Caution
The writer/maker/I take full responsibility.

Caution
This is more than a manual.

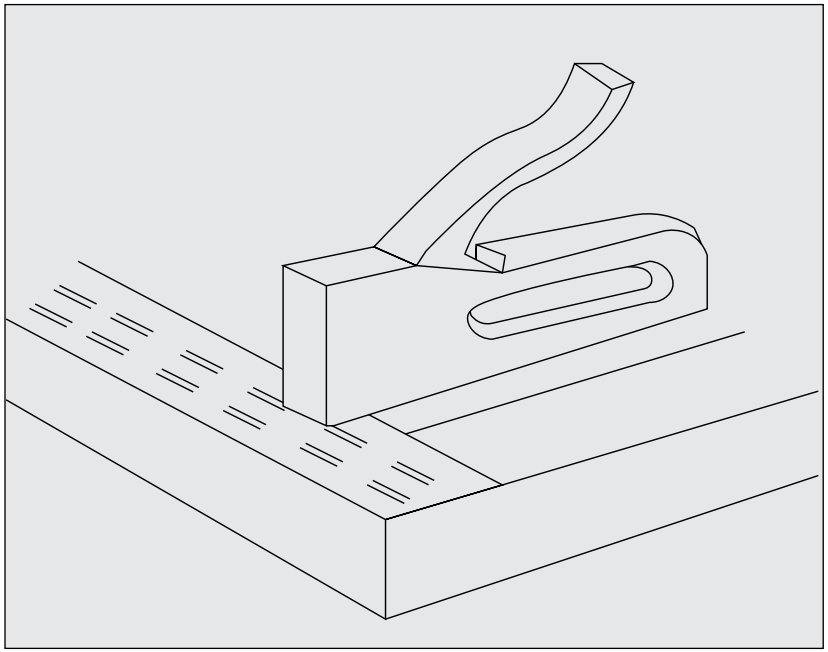

Drawing: 11.4

Constructing the Panels

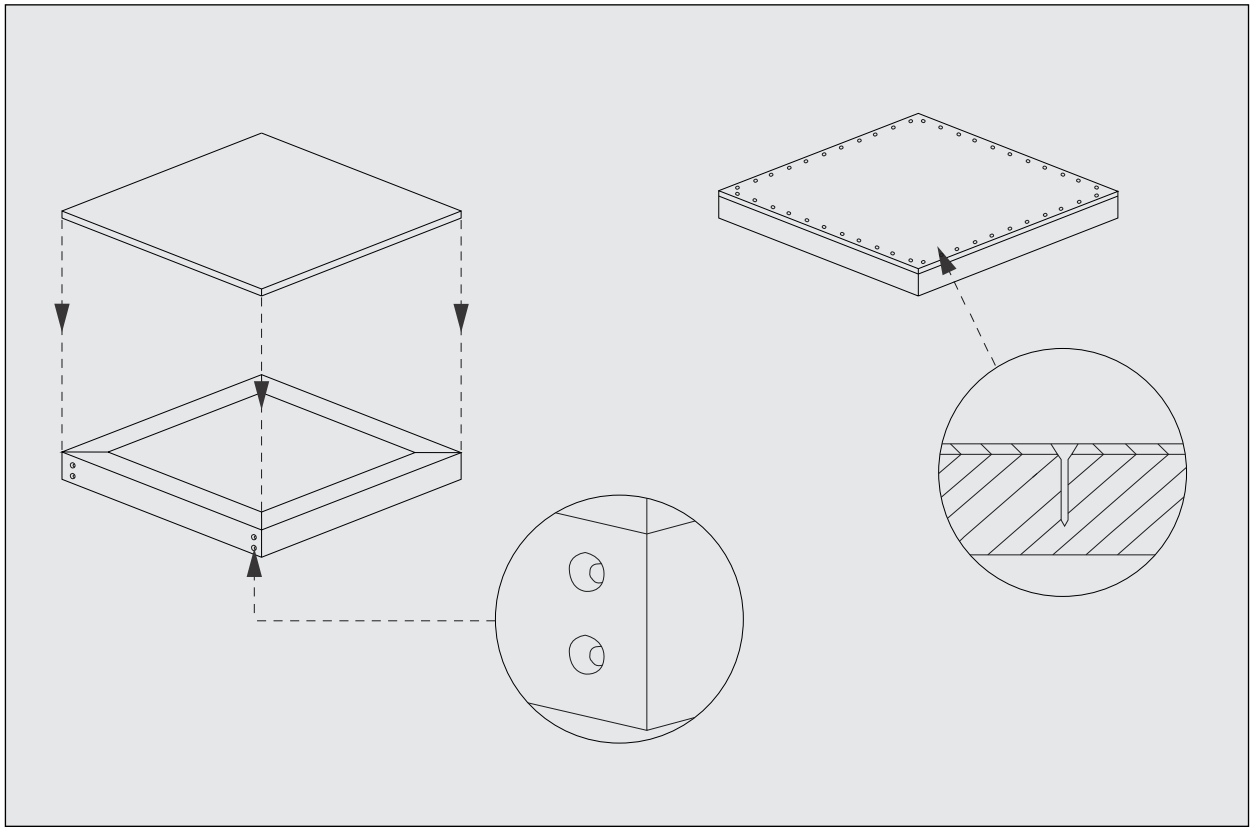

Drawing: 11.5

Constructing the Panels

Vulnerable

Vulnerable

‘Familiar forms are worried until they begin to break down and recombine differently; materials are pressured towards their limits, categories tilted to the point of slippage or collapse. The challenge is how to present these nascent assemblages from being assimilated all too quickly back into meaning, from becoming classified or (re) claimed swiftly by existing knowledge’

Familiar forms are worried
Cocker, E. Tactics for Not Knowing: Preparing for the Unexpected in Fisher, E and Fortnum, R. (Eds.) (2013) *In On Not Knowing: How Artists Think, Black Dog Publishing, London*

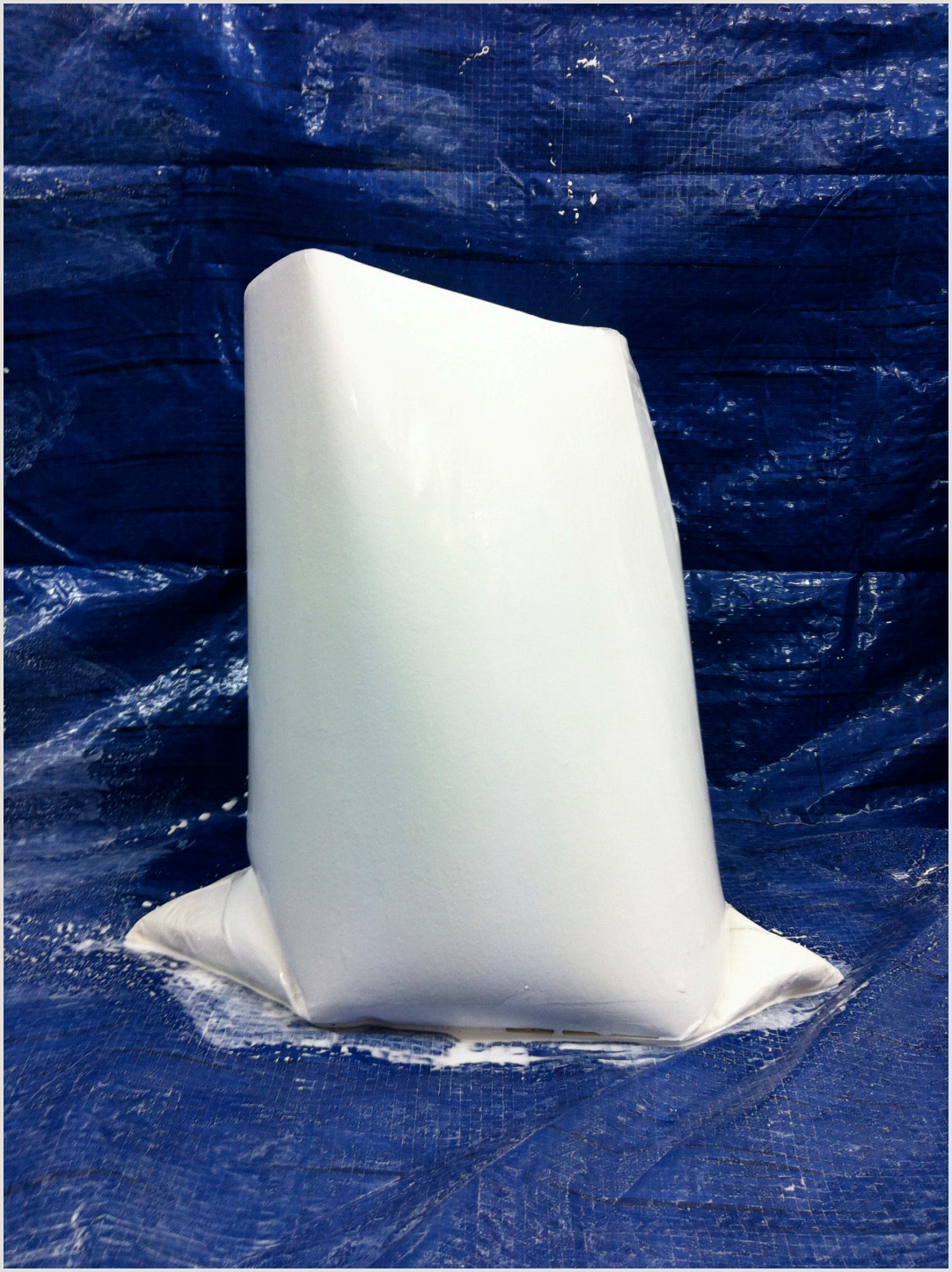

Paint filled paper bag, 2014
Paper, staples, tape and emulsion paint

Vulnerable

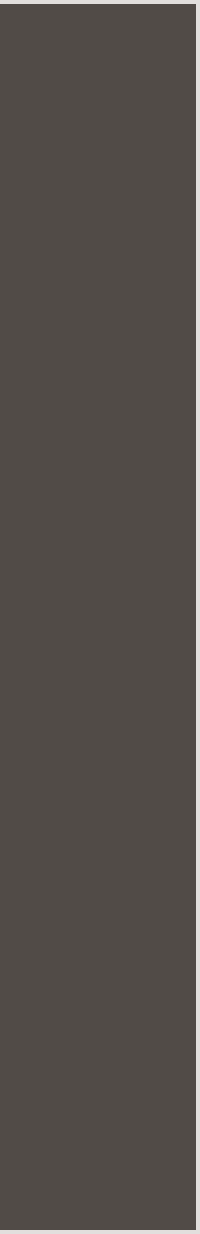

References

A

Addison, J and Kidd, N (2017) Live Resource, in Turvey, L and Walton, A (Eds) *In site of Conversation: On learning with Art, Audiences and Artists.* Tate Publishing.

Ackling, R (2015) *Between the Lines.* Occasional Papers.

Agamben, G (2009) *What is an Apparatus?: and other essays.* Stanford University Press.

Allington, E (2002) Dream machines. *Frieze 66.* Available at: https://frieze.com/article/dream-machines. Accessed: 16th April 2018

Althusser, L. (1971). Ideology and Ideological State Apparatuses: Notes towards an Investigation. In Althusser, L (ed) *Lenin and Philosophy and Other Essays.* New York: Monthly Review Press.

Ambrožič . M. and Vettese, A. (Eds) (2013) *Art as a Thinking Process - Visual Forms of Knowledge Production.* Sternberg Press.

Arendt, H. (1981). *The life of the mind.* Harcourt Brace Jovanovich.

Atkinson, T & Claxton, G. (Eds.) (2000). *The Intuitive Practitioner: On the Value of Not Always Knowing What One is Doing.* Buckingham, UK: Open University.

Austin, J L. (1962). *How to Do Things With Words.* Oxford University Press.

Altshuler, B. (1997) “Art by Instruction and the Pre-History of do it”, in Altshuler, B and Hans-Ulrich, B (Eds) Do It. NY: Independent Curators Incorporated.

B

Baltodano, M. P and Torres, R. D (Eds) (2002) Critical Pedagogy, Dialectical Theory in The Critical Pedagogy Reader. New York, Routledge.

Barthelme, Donald (1997) Not-Knowing in Herzinger, K (Ed) *The Essays and Interviews of Donald Barthelme*. New York: Random House.

Barrett, D. (1999) Fear of Not Flying. *Art Monthly.*

Barrett, D (1999) Review: Chris Burden Tate Gallery, London. Art Monthly. Available at: http://www.david-barrett.com/articles/artmonthly/am-burden.htm Accessed: August 16th 2017

Bataille, G (2004) *The Unfinished System of Nonknowledge.* University of Minnesota Press.

Benjamin, W (1970). *The author as producer. New Left Review,* (62), 83.

Bennett, A (2005). *The Author.* Routledge.

Bennett, J (2010). *Vibrant Matter: A political ecology of things.* Durham, N.C.: Duke University Press.

Bishop, C (2004). Antagonism and Relational Aesthetics, *October,* 110, 51–79

Bishop C (Ed) (2006) Participation. *Documents of Contemporary Art.* London/Cambridge, UK: Whitechapel/MIT Press

Bishop, C (2006) The Social Turn: Collaboration and its Discontents,” *Artforum 44*, pages 178-183.

Bishop, C (2012). *Artificial Hells: Participatory Art and the Politics of Spectatorship*. London and New York: Verso

Bishop, C (2012) Delegated Performance: Outsourcing Authenticity’, *October* 140, 91–112.

Bois, Y (1993) *Painting as Model*. MIT Press.

Bollas, C (1989) The Shadow of the Object: Psychoanalysis of the Unthought Known. Columbia University Press.

Briet, S (2006), *What is Documentation?* (Translation: Day, R.E. and Martinet, L.), The Scarecrow Press. Lanham, MD.

Bryan-wilson, J (Ed) (2013) *Robert Morris* (October Files). MIT Press.

Buckland, M (1997). What is a Document? *The Journal of the American Society of Information Science,* 48(9), 804–809.

Buck-Morss, S (2002). *Dreamworld and Catastrophe: the passing of mass utopia in East and West.* MIT Press, 2002.

Burke, J. F (1986). ‘Thinking’ in a World of Appearances Hannah Arendt between Karl Jaspers and Martin Heidegger. *Analecta Husserliana*, 21, 293-308

Butt, G (2005) *After Criticism: new responses to art and performance.* Blackwell.

References

C

Carter, P (2005) *Material Thinking: The Theory and Practice of Creative Research.* Melbourne University Publishing.

Catling, B (2009) 'Arthur Worsley and the Uncanny Valley' in Aura, S, and Wood, J (Eds) *Articulate Objects: Voice, Sculpture and Performance.* Peter Lang

Clark, M (2011) *The Indiscipline of Painting.* Tate Publishing.

Cocker, E (2013). Tactics for Not Knowing: Preparing for the Unexpected, in Fisher, E and Fortnum, R (Eds) *On Not Knowing: how artists think.* Black Dog Publishing

Cooke, N (2013) *Words.* Publisher East of Borneo.

Crocker, S (2007) Noises and Exceptions: Pure Mediality in Serres and Agamben', *CTheory.net*, Available at: http://www.ctheory.net/articles.aspx?id=574. Accessed: Jan 6th 2018.

Crogan P and Kinsley S (2012) Paying Attention: towards a critique of the attention economy. *Culture Machine 13*

Cutler, A (2010) What Is To Be Done, Sandra? Learning in Cultural Institutions of the Twenty-First Century. *Tate Papers* no.13. Available at: http://www.tate.org.uk/research/publications/tate-papers/13/what-is-to-be-done-sandra-learning-in- cultural-institutions-of-the-twenty-first-century. Accessed: September 17th 2017

Cutler, A (2013) Who Will Sing the Song? Learning Beyond Institutional Critique. *Tate Papers,* no.19. Available at: http://www.tate.org.uk/research/publications/tate-papers/19/who-will-sing-the-song-learning-beyond-institutional-critique. Accessed: September 17th 2017

D

Darder, A., Baltodano M. P. and Torres, R.D. (Eds) (2017) *The Critical Pedagogy Reader.* Routledge.

Day, J (2013) Digging In Mara Ambrozic and Angela Vettese (Eds) *Art as a Thinking Process Visual Forms of Knowledge Production*. Sternberg Press.

Dewey, J (2005) *Art As Experience*. Perigee Books.

Dezeuze, A (2010) The 'Do-it- Yourself' Artwork: Participation from Fluxus to New Media. Manchester University Press.

Dohm, K., Hoffmann, J and Stahlhut, H (2007) *Kunstmaschinen Maschinenkunst / Art Machines Machine Art*. Publisher: Museum Tinguely Basel, Schirn Kunsthalle and Kehrer.

E

Eco,U and Robey, D (1989) *The Open Work.* Harvard University Press.

Elkins, J (1996). *The Object Stares Back: on the nature of seeing.* Simon and Schuster.

Elkins, J (2001) *Why Art Cannot be Taught: A Handbook for Art Students.* University of Illinois Press, 2001.

F

Feature (2012) Painting Space: Is the space of painting made by abstraction, illusion or the sculptural qualities of the canvas? *Frieze* (6) Available at: https://frieze.com/article/painting-space. Accessed:April 7th 2018

Fisher, E. and Fortnum, R (Eds) (2013). *On Not Knowing: how artists think.* Black Dog Publishing.

Foster, H., Krauss, R., Bois, Y. A. & Buchloh, B. H. D (2004) *Art Since 1900: Modernism, Antimodernist, Postmodernism.* Thames and Hudson

Foucault, M (2001). *Fearless Speech.* Los Angeles, CA: Semiotext(e)

Fraser, N (2016) Contradictions of Capitalism and Care. *New Left Review, 100*. Available from: https://newleftreview.org/II/100/nancy-fraser-contradictions-of-capital-and-care. Accessed: September 2017

Fried, M (2009). *Art and Objecthood: Essays and Reviews*. University of Chicago Press.

Friere, P (1996) *Pedagogy of the Oppressed.* Penguin

G

Gauntlett, D (2011) *Making is Connecting: The Social Meaning of Creativity, from DIY and Knitting to YouTube and Web 2.0*. Cambridge: Polity Press.

Goldblatt, D (2005) Art and Ventriloquism: *Critical Voices in Art, Theory and Culture*. Routledge.

Goldsmith, K (2011) *Uncreative Writing.* Columbia University Press.

References

Groys, B (2009). Politics of Installation. *e-flux journal #2*, Available at: www.e-flux.com/journal/02/68504/politics-of-installation/ Accessed: August 25th 2017

H

Halsall, F (2008) Systems of Art. Peter Lang

Hamilton, A (2010). Making Not Knowing, in Jacob, J, M and Bass, J (Eds) *Learning Mind: Experience into Art.* University of California Press.

Hansen, R. (2008) Things v Objects: on the public life of things. *Art Monthly.* Available at: https://www.artmonthly.co.uk/magazine/site/article/things-v- objects-by-rikke-hansen-jul-aug-2008 Accessed: March 4th 2018

Hansen, S. M. & Vandeputte, T (2015) *Politics of Study.* Open Editions.

Hayles, N. K (1999) How We Became Posthuman: Virtual Bodies in Cybernetics, Literature, and Informatics. University of Chicago Press

Helguera, P (2011) *Education for Socially Engaged Art: A Materials and Techniques Handbook.* Jorge Pinto Books Inc.

Hirsch, N., Birnbaum, D., Graw, I., Städelschule Frankfurt am Main & Institut für Kunstkritik (2012) *Thinking Through Painting: reflexivity and agency beyond the canvas.* Sternberg Press.

How to Write Guide: The Metric System, Abbreviations, and Unit Conversions. *Department of Biology, Bates College, Lewiston*. Available at: http://abacus.bates.edu/~ganderso/biology/resources/writing/HTWabbr.html. Accessed: April 5th 2018

Hosing and Jubilee clips. *https://www.advancedfluidsolutions.co.uk*

Huberman, A, *How to Behave Better.* Available here: http://amateurlibrary.co.uk/wp-content/uploads/2015/09/How-to-Behave-Better.pdf Accessed: November 25th 2017

Huberman, A (2005). I (not love) Information, in Bovier, l., Ruf, B., Armleder, J. (Eds) *About Nothing: Catalogue Raisonné.* Zürich: JRP/Ringer.

Huberman, A (2011) Take Care, in Abu,M., Choi E. B and Pethick, E. (Eds) Circular Facts. Berlin: Sternberg Press.

Huberman, A (2015) Pay Attention: In an age of perpetual distraction, how might institutions slow down and refocus the way we look at art? *Frieze* (172). Available at: https://frieze.com/article/pay-attention. Accessed: April 6th 2018

I

Ingold, T (2011) *Being Alive.* Routledge.

Ingold, T (2013) *Making: Anthropology, Archaeology, Art and Architecture*. Routledge.

Ingold, T (2017) *Correspondences. Knowing From The Inside.* Available at: https://www.knowingfromtheinside.org/ Accessed: April 3rd 2018

J

Jackson, and Day, D (2004) *Collins Complete DIY Manual.* Collins.

Jackson's Art Supplies. *Jackson's.* Available at: https://www.jacksonsart.com

Jacob, M. J. & Baas, J (2010) *Learning Mind: Experience into Art.* University of California Press.

Jarvis, M (2007) Articulating the Tacit Dimension in Artmaking. *Journal of Visual Art Practice*, 6:3, 201–213.

Jones, C (1999) *Machine in the Studio: Constructing the Postwar American Artist.* University of Chicago Press

Jones, C. A., Mather, D and Uchill, R (2016). *Experience: Culture, Cognition, and the Common Sense.* MIT Press.

Jones, R (2013) On The Value of Not knowing: Wonder, Beginning Again and Letting Be, in: E. Fisher and R. Fortnum (Eds.) *On Not Knowing: How Artists Think*. London: Black Dog Publishing.

Jordan, J (2012) 'A Thingy World': Iris Murdoch's Stuff. *The Modern Language Review 107*, (2) 364–378.

Joselit, D (2009) Painting Beside Itself. *October -,* 125–134.

K

Kabakov, I. & Kabakov, E (2002) *The Palace of Projects.* Richter Verlag.

Kaprow, A (1966) *Assemblage, Environments and Happenings*. Abrams NY.

Kaprow, A. (1996) *Essays on the Blurring of Art and Life.* Berkeley: University of California Press.

References

Kester, G. H (2004) *Conversation Pieces: Community and Communication in Modern Art*. University of California Press.

Kiefer, A. (2011) Why Bother, in The Serving Library. Available at: http://www.servinglibrary.org/journal/2/why-bother. Accessed: January 27th 2018.

Krauss, R. (1973) Sense and Sensibility. *Artforum*, vol. 12. 43–52

Krauss, R. (1978) Le Witt in Progress. *October.* Vol 6. 46–60

L

Lacy, S., Roth, M. and Mey, K (2010) *Leaving Art: Writings on Performance, Politics, and Publics, 1974–2007*. Duke University Press.

Landy, M (2008) *Everything Must Go Ridinghouse.*

Latour, B. and Weibel, P (2005) *Making Things Public: Atmospheres of Democracy*. MIT Press.

Lewitt, S (1971) Doing Wall Drawings. *Art Now,* vol. 3, (2).

Love, K (2005) The Experience of Art as a Living Through of Language, in Butt, G (Ed.) *After Criticism: New Responses to Art and Performance.* Oxford: Blackwell.

Lijster, T., Milevska, S., Gielen, P. and Sonderegger, R. (Eds) (2015) *Spaces for Criticism: Shifts in Contemporary Art Discourses.* Valiz.

Lippard, L (1997) *Six Years: The Dematerialization of the Art Object*. University of California Press.

Lovatt, A (2010) *Ideas in Transmission: LeWitt's Wall Drawings and the Question of Medium.* Tate Papers.

Lovatt, A (2012) The Mechanics of Writing: Sol LeWitt, Stéphane Mallarmé and Roland Barthes. *Word & Image: A Journal of Verbal/Visual Enquiry* 28, (4) 374–83.

Lootsma, B and Jonge, P (1998) *Atelier Van Lieshout: A Manual.* Museum Boijmans van Beuningen;

Luhmann, N (2000) *Art as a Social System.* Stanford University Press.

M

Macleod, K. & Holdridge, L. (2002) The Enactment of Thinking: Creative Practice Research Degrees. *Journal of Visual Art Practice* 2, 5–11

Macleod, K & Holdridge, L (Eds) (2009) *Thinking Through Art: Reflections on Art as Research.* Routledge.

Macleod, K. & Holdridge, L (2011) Writing and the Doctorate in Fine Art, in Biggs, M and Karlsson, H (Eds) *The Routledge Companion to Research in the Arts.* Routledge.

Marshall, J. W (2011) Sonic Pleasure, Absence and the History of the Self: An Alternative Approach to the Criticism of Sound Art, *Sound Scripts* 3. 6–25

Millward, F (2013) The practice-led Fine Art Ph.D. — at the frontier of what there is — an outlook on what might be. *Journal of Visual Art Practice* 12, 121–133.

Molesworth, H (2003) Work Ethic. Pennsylvania State University Press.

Mollin, D and Reardon, J (eds) (2009) *Ch-ch- ch-changes: Artists Talking About Teaching.* London: Ridinghouse Publishers.

Morgan, J. and Jones, L (2009) *John Baldessari: Pure Beauty.* Prestel.

Morris, R. (1968) Anti-Form. *Artforum* 6.4.

N

Nancy, J (2000) *Being Singular Plural.* Stanford University Press.

Newman, H (2011) *Locating Performance: Textual Identity and the Performative*. Leeds: University of Leeds.

Newman, M. & Bird, J (Eds) (1999) *Rewriting Conceptual Art (Critical Views)*. Reaktion Books

Noticer: Responsive to curiosity, interactions and things that emerge. http://www.noticer.uk/

O

O'Brien, F. (2007) *The Third Policeman*. Harper Perennial.

Obrist, H. U (Ed) (2013) *Do It: The Compendium.* Distributed Art Publishers.

O Gormon, R & Werry, M (2012) On Failure: On Pedagogy. *Performance Research: A journal of the performing arts* 17. 1-8

Ostrow, S. (2003) Sol LeWitt by Saul Ostrow. Bomb Magazine #85. Available here: https://bombmagazine.org/articles/sol-lewitt/. Accessed: 16th January 2018

References

P

Pallasmaa, J (2009) *The Thinking Hand: The Thinking Hand: Existential and Embodied Wisdom in Architecture*. John Wiley & Sons.

Pearlman, S (2014) Meaning Making and Making Meaning Meaningful: the relationship between language and thought in critical pedagogy. *International Journal of Critical Pedagogy* Vol 5 (2).100–113.

Peasnell, E (2017) Argument: Agrestal Respource, in Turver, L and Walton, A (Eds) *In site of Conversation: On learning with Art, Audiences and Artists.* Tate Publishing

Polanyi, M (2009) *The Tacit Dimension.* University of Chicago Press.

Pohjoisen kulttuuri-instituutti – Institute for Northern Culture (n.d.) Ingold, T. (2013) *Thinking through Making,* [online] Available from: https://www.youtube.com/watch?v=Ygne72-4zyo Accessed: March 20th 2018

R

Ramsey, S (2011) *Reading Machines: Toward and Algorithmic Criticism*. University of Illinois Press.

Ranciere, J (2001) *The Emancipated Spectator.* Verso.

Raunig, G (2008) Bodies, Things and Social Machines. *European Institute for Progressive Cultural Politics.* Available at: http://eipcp.net/transversal/0107/raunig/en. Accessed: February 12th 2018

Raunig, G (2008) What is Critique? Suspension and Recomposition in Textual and Social Machines. *European Institute for Progressive Cultural Politics.* Available at: http://www.eipcp.net/transversal/0808/raunig/en Accessed: April 10th 2018

Raunig, G (2010) A Thousand Machines: *A Concise Philosophy of the Machine as Social Movement.* The MIT Press

Raunig, G (2013) Factories of Knowledge, Industries of Creativity. Semiotext(e)

Ree, J (2000) I See a Voice: *A Philosophical History of Language: Deafness and the Senses.* Flamingo.

Recinos, A (2018) “Art can’t stop the machine.” On political posturing + preempting failure as a poor defence in the Mechanisms group show. *AQNB*. Available at http://www.aqnb.com/2018/01/08/art-cant-stop-the-machine-on-political-posturing-preempting-failure-as-a-poor-defence-in-the-mechanisms-group-show/ Accessed: April 3rd 2018

Rorimer, A (2011) *New Art in the 60s and 70s : redefining reality.* Thames & Hudson.

S

Satz, A. & Wood, J (Eds) (2009) *Articulate Objects: Voice, Sculpture and Performance.* Verlag Peter Lang.

Schumacher, H (2018) Inside the world of instruction manuals. *BBC Futures* Available at: http://www.bbc.com/future/story/20180403-inside-the-world-of-instruction-manuals. Accessed: 6th April 2018

Schwartz, L. S. & Sebald, W. G. (2010) *The Emergence of Memory - Conversations with W. G. Sebald.* Seven Stories Press.

Screwfix.com *https://www.screwfix.com*

Sennett, R (2009) *The Craftsman*. Penguin.

Sennett, R (2013) *Together: The Rituals, Pleasures and Politics of Cooperation.* London: Penguin.

Sheet-Johnstone, M (2000) Kinetic Tactile-Kinesthetic Bodies: Ontogenetical Foundations of Apprenticeship Learning. *Human Studies* 23, 343–370.

Sheikh, S (2009) Objects of Study or Commodification of Knowledge? Remarks on Artistic Research. *Art and Research: A Journal of Ideas, Contexts and Methods.* Available at: http://www.artandresearch.org.uk/v2n2/sheikh.html. Accessed: December 8th 2017

Sillars, L (2009) Joyous Machines: Michael Landy and Jean Tinguely. Tate Publishing.

Staff, C (2015) Monochrome: *Darkness and Light in Contemporary Art*. I.B.Tauris, 2015.

Steyerl, H (2009) Is a Museum a Factory? *e-flux* #7. Available at: http://www.e-flux.com/journal/07/61390/is-a- museum-a-factory/. Accessed: 21st August 2017

Stiles, K (1996) *Theories and Documents of Contemporary Art: A Sourcebook of Artists’ Writings.* University of California Press.

References

Strauss, D. L (2010) *From Head to Hand: Art and the Manual.* Oxford University Press.

Suchman, L. A (1987) *Plans and Situated Actions: the problem of human-machine communication.* Cambridge University Press.

T

The Editors of ARTNews. (2015) 'What You See Is What You See': Donald Judd and Frank Stella on the End of Painting, in 1966. *ARTnews*. Available at: http://www.artnews.com/2015/07/10/what-you-see- is-what-you-see-donald-judd-and-frank-stella-on-the-end-of-painting-in-1966 Accessed: Jan 8th 2018.

Thomson, P. McElvie, A. Turvey, L and Walton, A (2017) L*earning the Art Museum.* Available at: https://www.researchgate.net/publication/319183497_LEARNING_THE_ART_MUSEUM_EXPERIMENTS_IN_TALKINGWRITING_ETHNOGRAPHY. Accessed March 8th 2018

Toolstation. https://www.toolstation.com

Tonkinwise, C (2008) Knowing by Being-There Making: Explicating the Tacit Post-Subject in Use. *Studies in Material Thinking,* Vol 1 (2). Available at: https://www.materialthinking.org/sites/default/files/papers/Cameron.pdf Accessed: April 2nd 2018

U

ukpackaging.com. Large Bubble Wrap Rolls. ukpackaging.com. Available at: https://www.ukpackaging.com/general-packaging/bubble-wrap/large-bubble-wrap-rolls.

W

Wesseling, J (2011) *The Artist as Researcher.* Valiz.

Whiteley, N (2007) Seeing What, How and Why: the ARTnews series, 1953–58. *Journal of Visual Art Practice* Vol 6 (3) 167–174

Wickes.co.uk. https://www.wickes.co.uk

Wilk, E (2018) The Grammar of Work When dealing with abuse in the art industry, is it possible to separate the noun 'work' from the verb? *Frieze.* Available at: https://frieze.com/article/grammar-work Accessed: March 30th 2018

Wittgenstein, L (2009) *Philosophical Investigations.* Wiley-Blackwell.

Wolseley Plumb, Parts, Climate, Pipe and Drain Centre. *https://www.wolseley.co.uk*

Wood, G (2002) *Living Dolls*. Faber and Faber.

Z

Zizek, S (2014) *Event: Philosophy in Transit.* London: Penguin.

Credits

Graphic Design
Charlie Newhouse

Original drawings
Brian Kidd

Drawings converted in illustrator by
Will Kendrick

Drip Detect Machine developed with
Jon Roome

Panel Construction developed with
Tim Davies

Proof reader
Una Henry

Binding
Wyvern Bindery

Printing
Steve Ricketts at Bath School of Art and Design

Manual contributions from
Gill Addison, Jo Addison, Simon Butler, Brian Catling, Eric Butcher, Tim Davies, Jason Gaiger, Simon Granell, Una Grimes, Francis Halsall, Una Henry, Graeme Hughes, Sarah Kate Wilson, Claire Makhlouf Carter, Mali Morris, Katrina Palmer, Raine Smith, Damien Taylor, Jo Turney, Nina Wakeford.

Supervisors
Claire Makhlouf Carter
Brian Catling

With additional support from
Rebecca Fortnum

With special thanks to
Claire Makhlouf Carter (whose level of commitment went far beyond her role as supervisor)
Jo Addison (our ongoing learning together informs much of this thinking)
My dad (the draftsman and technician) for his tireless steady hand
Dave and Dylan (for their ongoing patience, support and belief that i could do it)