STUDIES
IN THE MEASUREMENT, FORM AND INTERPRETATION
OF SOME ELECTRICAL PROPERTIES
OF NORMAL AND PATHOLOGICAL HUMAN SKIN
IN VIVO

A thesis submitted to the Faculty of Clinical Medicine
in the University of Oxford
for the degree of Doctor of Philosophy

Volume 3

David Charles Salter
Merton College
Easter 1981



PART V: CONCLUSIONS

Chapter 12 - A REVIEW OF SOME INTERPRETATIONS OF THE NON-LINEAR AND NOT NECESSARILY SLOWLY TIME-VARIANT ELECTRICAL PROPERTIES OF SKIN

12.1 Introduction

There is as much need for an extensive review of the non-linear electrical properties of skin as there is for an extensive review of the linear properties. Indeed, there is more need, because the non-linear properties are much more complicated, just as might be expected. In consequence the experimental investigations of these properties have been even more difficult and interpretations of their very rich and variegated phenomenology have remained fragmented and compartmentalized.

Thus one of the purposes of the detailed review given here is to attempt to fit these various fragments together like the pieces of a jigsaw. By forcing them to fit together in this way, the flaws in each piece tend to show up, and can then be removed to make the "grand design" of the overall phenomenology more clearly visible. By the end of the Chapter this synthetic approach will indeed have produced the first equivalent circuit to be able to model the linear and the non-linear, the D.C. and the A.C. properties of skin for arbitrary amplitude of applied voltage. The approach should also have produced a clearer understanding of the physiological properties the circuit is representing.

The Sections of this Chapter correspond to the divisions of Section 4.3, which earlier provided a brief introduction to the phenomenology that is to be reviewed in detail here. As in Section 4.3, we will begin by considering a topic which affects the electrical properties of skin at all magnitudes of applied voltage, including zero. Following this, later Sections will review the electrical properties of skin at successively higher values of the voltage applied to it. This sequence begins with Section 12.3, which

discusses the behaviour of skin at zero applied voltage in the historically appropriate context of a review of the investigation of the electrical properties of skin by psychophysiologists. Lastly, Section 12.7 considers the breakdown of the electrical resistance of the skin at (physiologically) very high applied voltages. The Chapter then concludes with a summary of the phenomenology that has been reviewed, its proposed interpretation, and the presentation and discussion of a skin-equivalent circuit.

12.2 Long-time-constant artefactual skin conductance changes

12.2.a Introduction

This Section describes phenomena which affect the electrical properties of skin at all values of applied voltage, including zero.

However, the title indicates that the Section is intended to review observations and interpretations of changes in skin conductance which are both "artefactual" and have a "long time constant", terms which need some further explanation.

By specifying that the changes are "artefactual" I mean to indicate that they are induced by externally-applied treatments of the skin, such as placing contact electrolyte on it or applying an electric field across it, or both. I mean to exclude basically "physiological" changes such as those due to sweat-gland activity, although perhaps some of these could be described as "artefactual" by a slightly broader definition of that term.

Also, by specifying that the artefactual skin conductance changes to be considered are those which have a long time constant, I mean to exclude those which are more than 70% completed within one or two minutes. Such "short time constant" artefactual changes seem to depend upon different mechanisms, and they are therefore reviewed separately, in Section 12.6.

12.2.b Percutaneous absorption of water and electrolytes: routes and rates

The literature dealing with the way in which external substances permeate the skin, penetrate through it and are partially adsorbed by it is usually called the literature of "percutaneous absorption", although the title is not very satisfactory (Rothman, 1954, p.27). This literature is voluminous and manifestly it is only possible to consider certain aspects of the subject here. The foremost expert on the topic is Dr R.J. Scheuplein, and fortunately he has recently completed an extensive review of it (Scheuplein, 1978) together with a much briefer review (Seheuplein, 1976a and 1976b), for the benefit of those in a hurry. The 1978 work includes an adequate introduction to the relevant theoretical principles, since some of the other introductions available (e.g. Tregear, 1966a; Scheuplein, 1976a, 1976b) are rather superficial.

Apparently the research of many workers during the past hundred years quite soon led to the realization that all substances will penetrate through the skin eventually, and will be adsorbed by it to different degrees during the process. It also was demonstrated that this movement of substances through human skin occurs by passive diffusion and not by active transport (with a few minor exceptions due to the physiology of sweat glands).

One question however remained a bone of contention until quite recently, namely whether substances diffusing through the skin do so predominantly via the shunt pathways provided by the appendages, or directly across the various layers of the epidermis. Scheuplein addressed himself to this question in a paper in 1967, presenting after his analysis of the problem a solution to it which is now universally accepted. Because his solution to this problem offers considerable insight into the mechanisms likely to be

responsible for some of the electrical properties of skin, let Scheuplein speak for himself from the Introduction of his 1967 paper:

> "Most students of skin permeability would agree that there are potentially three distinct routes of penetration through the stratum corneum: (1) the follicular regions, (2) the sweat ducts and (3) the unbroken stratum corneum in between these appendages. But which one is the principal route of penetration? This frequently posed question has resulted in a division of opinion, the one favouring percutaneous absorption primarily by diffusion via sweat ducts and hair follicles and the other holding that diffusion through the unbroken stratum corneum is the principal pathway. Rather interestingly there is substantial confirmed data in the literature which seemingly support both views. Those investigators favouring appendageal diffusion cite the preferential staining of hair follicles, the formation of peri-follicular wheals and the rapid diffusion of charged dyes through sweat ducts under a potential gradient. The proponents of diffusion through the unbroken stratum corneum matrix make us aware first of the very small fractional surface area of the appendages $\approx 10^{-3}$. They further demonstrate that the steady state diffusion rate into skin is essentially unchanged when more or fewer follicles are present. It has also been shown that steady state diffusion of many small molecules through stratum corneum occurs with large activation energies = 10 - 18 Kcal $mole^{-1}$, which would be very unlikely for relatively rapid appendageal diffusion. A reconciliation of these contrary theories and a re-interpretation of the conflicting data is really long overdue and quite necessary if a useful link between studies of skin permeability in the laboratory and their relevance to the topical application of a drug by the physician is to be obtained.
>
> It seems to the author that attempts to answer what is really a very bad scientific question have led to a misplacement of emphasis and to an oversimplification of the stratum corneum membrane as a diffusion barrier. As the analysis given below will show, it is probably wrong to assume that a principal route of penetration exists without a requirement to further specify other conditions. A mathematical analysis of the skin as a composite membrane with the appendages in the role of diffusion shunts has been developed. It is shown that under the appropriate conditions each one of the three contending routes of permeability may be, in turn, overwhelmingly dominant. In particular the transient diffusion which occurs shortly after the application of a substance to the surface of the skin is shown to be potentially far greater through the appendages than through the matrix of the stratum corneum. After steady state diffusion has been established the dominant diffusion mode is probably no longer intra-appendageal but occurs through the matrix of the stratum corneum."

The basic conclusions to be derived from this and later work of Scheuplein may therefore be summarized as follows. Diffusion via the appendageal shunts is rapid, reaching its full extent within a minute or so, but the quantity of substance able to penetrate through the skin via these shunts per unit time is small. By contrast, diffusion directly across the layers of the epidermis is relatively very slow, but if the contact persists long enough, the flux of substance penetrating the skin by this route will eventually build up to a considerable value, and after a few minutes is likely to greatly exceed the flux of substances travelling via the shunts. Furthermore, the overwhelmingly dominant hindrance to diffusion directly across the epidermis is the stratum corneum, not some deeper layer (see especially Scheuplein, 1976a) as championed by most (though not all) investigators up to the 1950s.

Now these have been general statements. This thesis, for reasons which will become clearer if they are not clear already, is however concerned mainly with the percutaneous diffusion of water and electrolytes, since this process will change the conductance of the skin (see e.g. subsection 11.4.d).

In the case of water, more is known. Certainly it is well established that the stratum corneum avidly absorbs and adsorbs water (see e.g. Kligman 1964; Scheuplein and Morgan, 1967), and that water eventually penetrates transcellularly across it (see e.g. Scheuplein, 1965, p.342 ff, and 1978, pp.1726-1729). If the quantity Scheuplein calls a "lag-time" can be identified as roughly equal to a relaxation time for percutaneous absorption, then the time constant for the transport of water across the corneum is of the order of ten minutes (Scheuplein, 1978, p.1740), while the corresponding time constant for diffusion via the appendages is of the order of ten seconds (Scheuplein, 1967, Fig. 2, and 1978, pp. 1732, 1733).

Far more relevant to this thesis however is the percutaneous absorption of aqueous solutions of electrolytes containing hydrated ions, and unfortunately there are not yet any firm conclusions regarding this case because few people seem to have been interested in investigating it properly. Tregear (1966b) found that skin has a low permeability for electrolytes, which agrees with the conclusions of earlier work reviewed by Rothman (1954, pp. 36, 37). Scheuplein (1976b, p.674; 1978, p.167a) stated that this finding led him to expect that electrolyte penetration of skin would be predominantly via the appendages, although personally I do not see why this necessarily follows, particularly in view of his own work of showing that appendageal diffusion usually only dominates for a short time, whereafter it is outstripped by the flux coming directly across the corneum. Because this behaviour seems to be universal for other materials penetrating skin, I think we may justifiably assume that it also applies to hydrated ions, for the situation has not improved since Scheuplein and Blank noted (1971, pps. 733, 734) that there was not yet enough experimental evidence concerning electrolyte penetration per se. Subsection 11.4.d noted that the results of Allenby et al. (1969) indicated that the conduction of charge carriers through partially hydrated corneum involves a similar activation energy to that required for the movement of water through the same tissue, and so it seems likely that the charge carriers are (hydrated) ions moving through the lattice of bound water just as "free" water molecules themselves would have to do in order to travel through the corneum.

12.2.c Some electrical observations implying absorption of water and electrolytes by the corneum

It has been known for many years that as soon as an area of skin is covered by an electrode, an electrolyte solution, or both, there begins a slow (and ever slowing) increase in the electrical conductance (and admittance) of that skin, irrespective of whether or not an electric field is being applied. Ebbecke (1921, pp. 241, 242) attributed this phenomenon to an increase in the water and electrolyte content of the stratum corneum, and this interpretation was supported by the more extensive investigations of Rosendal (1943, pp. 137, 138) and of Blank and Finesinger (1946, pp. 552-556).

From published graphs (e.g. Rosendal, 1943, Fig.1; Edelberg and Burch, 1962, Fig.2; Khalafalla et al., 1971, Fig.7) one may infer that the decrease in skin resistance R (or skin impedance $|Z|$) with time t may be approximately described by an exponential decay from some value R_{init} to some value R_{final},

$$R(t) \approx R_{final} + (R_{init} - R_{final}) \exp(-t/\tau_c), \quad R_{final} < R_{init} \qquad (12.2.c.1)$$

which predicts a graph of the form

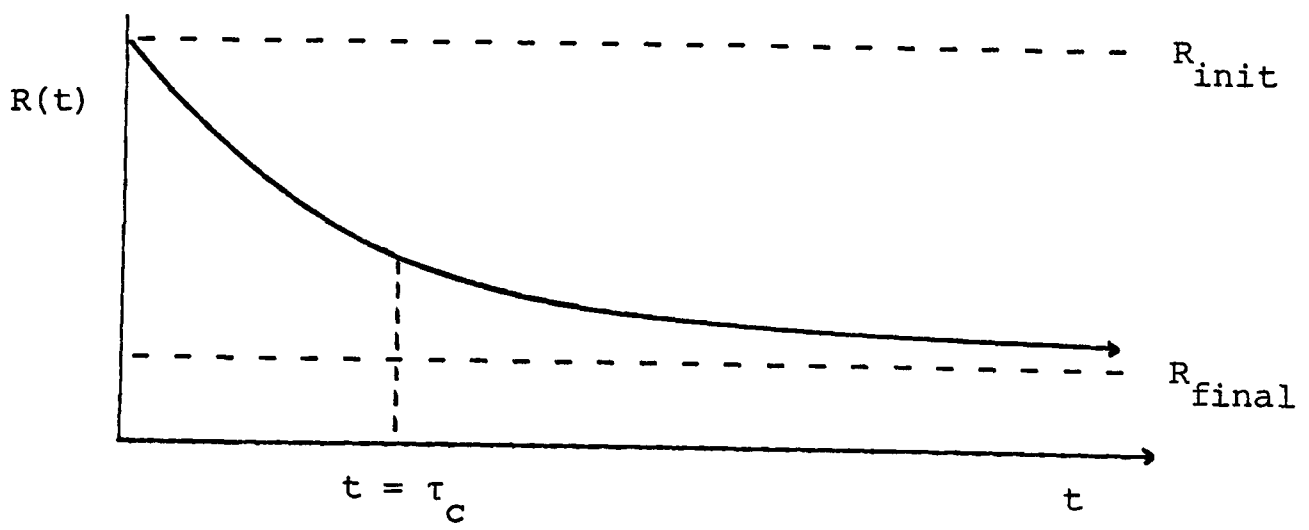

Fig. 12.2.c.I

as is indeed observed.

The time constant τ_c is of the order of ten minutes for a square centimetre of skin, a value which on the basis of the findings reviewed in the last subsection, would tend to implicate the corneum and thus confirm the interpretation proposed by Ebbecke. Geddes and Steinberg (1973) have investigated the variability in the magnitude of the time constant τ_c using initially dry, circular silver electrodes of diameter 1.7 cm. They found as expected that skin resistance decreased exponentially with time, with a time constant between 1.00 and 7.75 minutes, mean 3.26 minutes (10 subjects). They also found that R_{init} was about ten times the resistance measured after 20 minutes, which approximates well to R_{final}.

Some investigators however have instead measured current flow at constant applied voltage V_{app}, and found that current increases with time in a manner which can be approximately described, in view of (12.2.c.1), as

$$I(t) = V_{app} [G_f - (G_f - G_i) \exp(-t/\tau_c)] \ , \ G_i = 1/R_{init}, \ G_f = 1/R_{final} \qquad (12.2.c.2)$$

predicting a graph of the form

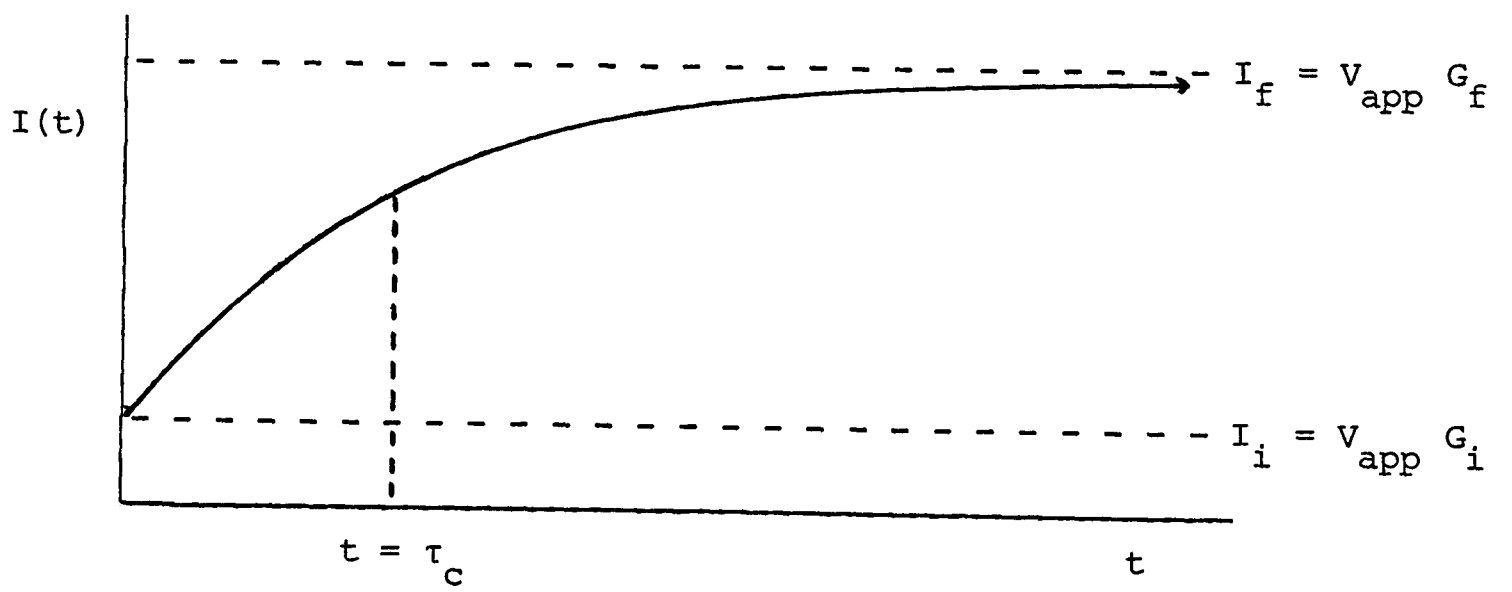

Fig. 12.2.c.II

and this will be considered again in subsections 12.2.d and 12.2.f.

The observed values of R_{final}, G_f and τ_c depend of course upon experimental conditions such as temperature, the nature of the fluid in contact with the skin, and various other factors including the magnitude and direction of whatever electric field is applied. Rosendal (1943) for example showed explicitly that as might be expected the value of R_{final} is reduced (i.e. G_f is increased), when the concentration of an aqueous electrolyte solution applied to the skin is increased. Rosendal used an applied voltage of 2V, and his work again implies that hydrated ions will diffuse into the corneum in significant amounts, at least in the presence of an electric field. Such an electrically-aided absorption of charge carriers would increase the conductance of the corneum to a degree depending upon the amount of charge (the time integral of current) passed through the skin, and indeed for example Kryspin (1965) has stated that his experimental results showed this effect.

12.2.d Field-independent diffusion of water into the corneum

In this subsection we will consider the absorption of water and its possible electrical consequences. The absorption of hydrated ions will be treated separately in subsection 12.2.f as a field-dependent phenomenon.

Scheuplein has pointed out (1978, p.1700) that if a substance is placed onto the stratum corneum at time t = o, the amount of that substance which is in the process of diffusing through the corneum at any subsequent time t, Q_t^{mem}, is given by

$$Q_t^{mem} = K\delta C_v \left[1 - \frac{8}{\pi^2} \sum_{n=o}^{\infty} \frac{1}{(2n+1)^2} \exp\left[-(2n+1)^2 \pi^2 D^2 t/\delta^2 \right] \right] \qquad (12.2.d.1)$$

where K is the partition coefficient for the substance between its vehicle and the stratum corneum

δ is the thickness of the stratum corneum

C_v is the concentration of the substance in the vehicle ($KC_v = C_m$, the concentration of the substance at the surface of the corneum)

and D is the diffusion coefficient for the diffusion of the substance through the corneum (N.b. there is a typographical error in Scheuplein's equation (9); the version above is corrected in the $1/(2n+1)^2$ part.)

As Scheuplein has also shown (1978, Fig.2, p.1702), (12.2.d.1) produces a graph of the form

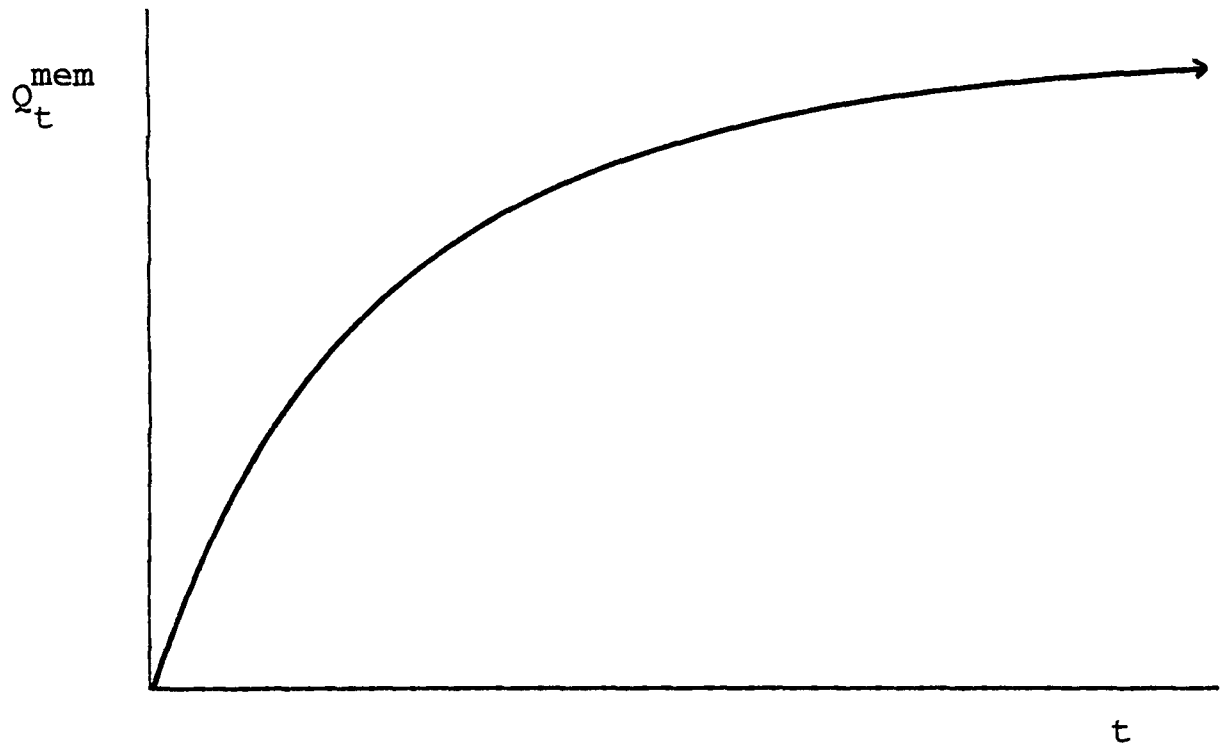

Fig. 12.2.d.I

and indeed most of the features of (12.2.d.1) can be reproduced by the much simpler

$$Q_t^{mem} = KC_v\delta \left[1 - \exp\left(\frac{-t}{\delta^2/\pi^2 D^2}\right)\right] \qquad (12.2.d.2)$$

There are however severe restrictions upon applying this analysis to the absorption of water by the corneum because as more water is absorbed the corneum will swell, changing δ, and also the effective value of the diffusion coefficient D will alter (cf. Scheuplein 1978, pps. 1695, 1743-1745).

Also, if this theory of absorption of water by a thick membrane, although the best linear theory presently available, is only approximate, then any

attempt we make to relate the water content of the corneum to its conductivity will be even more approximate. A first approach however was made as follows.

It was assumed in the spirit of (12.2.d.2) that the content of the corneum followed a time-course which can be approximated by

$$h = h_i + (h_f - h_i)\ [1 - \exp(-t/TO)] \qquad (12.2.d.3)$$

where h_i is the initial weight fraction of water, h_f the final weight fraction, and TO some time constant. (Of course, although we may expect that the water content of the stratum corneum settles down into a pseudo-steady state after a few time constants, where probably $TO = \tau_c = 10$ minutes, the adsorption of water diffusing through the corneum may continue for many hours until saturation is reached.)

Equation (12.2.d.3) was then substituted into the modified Rosenberg equation

$$\sigma_w = \sigma_d \exp(-\Delta E_d/kT) \exp\left[\frac{q^2}{kTR}\left(\frac{1}{\varepsilon_d} - \frac{1}{\varepsilon_d + h(\varepsilon_{sat} - \varepsilon_d)}\right)\right] \qquad (12.2.d.4)$$

and the behaviour of $\sigma_w/[\sigma_d \exp(-\Delta E_d/kT)]$ was investigated as a function of time by modelling the combined equations numerically by computer. The following parameter values were used:

(a) $h_i = 0.07$

Spencer et al. (1975, p.163) showed that the water content of human abdominal stratum corneum at 60% R.H. is about 10% at 30°C and 5% at 20°C so I have chosen 7% as representative at an average skin surface temperature.

(b) $h_f = 0.07\text{-}0.8$

This represents pseudo-steady-state weight fractions of 7% - 80%, the latter representing a ratio of 1:4, which may be more than is found even at final saturation.

(c) $(t/TO) = 0\text{-}3$

Scanning through three time constants is quite adequate.

(d) $\varepsilon_d = 3$

This value follows the suggestion of Pethig (1979, p.295) as to the relative permittivity of dry proteins, and compares with the value of 4 used by Rosenberg (1962).

(e) $\varepsilon_{sat} = 70$

Since the relative permittivity of pure water is about 80, and there will be a considerable amount of other material of presumably lower permittivity in the saturated tissue, I have taken the value of 70 as an estimate of the permittivity of the mixture.

(f) $(q^2/kTR) = 20\text{-}100$

This range covers all reasonable values in the light of the comments of Pethig (1975, p.295) concerning the work of Rosenberg (1962). Of course no-one knows, and we can only find empirically, the most suitable value for a system of proteins as complicated as that of the stratum corneum.

The results of these simulations could always be approximated, to a greater or lesser degree of accuracy, by an equation of the form

$$G(f) = G_f - (G_f - G_i) \exp(-t/B) \qquad (12.2.d.4)$$

cf. (12.2.c.2) and Fig.12.2.c.II

with $B \simeq TO$. The values of G_f and G_i however are as would be expected critically dependent upon the assumed value of (q^2/kTR), to a lesser extent upon ε_d and h_f, and to a far lesser extent upon the other parameters.

It seems then that at least some theoretical support can be offered for the intuitively obvious phenomenological equations (12.2.c.1) and

(12.2.c.2) if observed in the absence of an electric field, though the large number of approximations involved restricts the theory to qualitative rather than quantitative modelling. Effects due to the electrically-influenced diffusion of hydrated ions will be considered in subsection 12.2.f, and these effects can reproduce (12.2.c.1) and (12.2.c.2) rather more closely.

12.2.e The fixed charge of the corneum

As Rothman (1954, p.11) pointed out, most proteins have a negative electrical charge when in contact with solutions of neutral pH, and the magnitude of this charge will change with pH such that it may in a suitable medium be reduced to zero, or even be reversed such that the charge becomes positive. Proteins are therefore described as being "amphoteric". For decreasing pH values their charge becomes more positive, and for increasing pH values, their charge becomes more negative. This charge may be regarded as fixed to the molecule and so a membrane made from the protein will behave as a so-called "fixed-charge membrane" (cf. Teorell, 1953).

The pH value at which the charge of the protein is zero is known as its "isoelectric point", and is characteristic of the molecule concerned. Human skin however is a composite structure containing many different proteins, and so should not be expected to display a distinct isoelectric point. Nevertheless various workers have offered what are probably spuriously precise estimates of its pH value, for example 3 - 4 (Rein, 1926a), 4.1 (Rothman, 1954, p.11) and 4.5 (Joseph and Engel, 1959). For such a complicated proteinaceous system as skin, such values are not likely to be more than estimates of some point within a rather grey area on the pH scale. This "grey area" corresponds to the distinct isoelectric point found for a single protein.

Now the fact that the fixed charge of the corneum is pH-dependent makes it possible to settle an apparently still unresolved dispute between two of the most thorough early investigators of skin electrophysiology, Rein and Rosendal. Rosendal found that his results (1943, 1944, 1945) indicated that the corneum had a fixed positive charge, and so he was obliged to question the work of Rein, whom Rosendal seems to have assumed

to have claimed that skin has a fixed negative charge. This however is a simplistic interpretation of the work of Rein, who in fact was one of the first to show that the observed fixed charge on skin may vary, depending on the pH of the contact electrolyte. Some pH values which may be relevant to the dispute are given in Table 12.2.e.A.

Table 12.2.e.A: Some pH values of electrolytes

	Distilled water	5.2 - 6.4
	Physiological saline	5.5
Used (among other electrolytes) by Rosendal	KCl (1%)	5.55
	KCl (saturated)	5.0
Used (among other electrolytes, including KCl) by Rein	HCl (N/10)	2.35
	HCl (N/100)	2.6
	NaOH (N/100)	10.8
	NaOH (N/10)	12.2

and as will be seen in more detail later, it is possible to deduce from the considerable body of experimental results obtained by Rein (1924, 1926a, 1926b, 1929) the relationships shown diagrammatically in Table 12.2.e.B.

It seems from this latter Table that KCl falls within the "grey" area. Consequently, although its pH value is greater than the quoted "isoelectric point" values, and this would lead us to expect KCl to produce a negative fixed charge on skin, we need not be too surprised that this expectation is apparently not fulfilled, since Rein (1926b, pps. 222, 223 and 227) showed that KCl gave qualitatively the same results as HCl, and opposite ones to NaOH. This implies then, however surprising it may seem at first, that the KCl used extensively by Rosendal (1943, 1944, 1945) produced a positive fixed

charge in the corneum just as he claimed was there, and so the apparently irreconcilable argument between Rosendal and Rein as to the sign of the fixed charge of the skin is in fact a non-problem.

Table 12.2.e.B

Relationships derivable from some of the results of Rein (1924, 1926a, 1926b, 1929):

Electrolyte pH	A C I D I C							A L K A L I N E						
pH value	0	1	2	3	4	5	6	7	8	9	10	11	12	13	14
Contact electrolyte	N/10 HCl	N/100 HCl		Sat. KCl	1% KCl							N/100 NaOH	N/10 NaOH		
Fixed charge of corneum	P O S I T I V E			("Grey Area")								N E G A T I V E			

12.2.f Field-dependent diffusion (electrodiffusion) of ions into the corneum

As was noted earlier, the entry of hydrated ions into the skin, and their movement through it, can be expected to be influenced by whatever electric field exists locally. This subsection attempts to account for the observed long-term-constant field-dependent phenomena.

Rein (1926b, Fig.3) applied N/10 and N/100 KCl to skin and observed the rise in current with time for constant applied voltage. As was discussed earlier, the results of this type of experiment can be approximately described by

$$I(t) = V_{app} \left[G_f - (G_f - G_i) \exp(-t/\tau_c)\right] \qquad (12.2.c.2)$$

which was drawn in Fig. 12.2.c.II. Using this equation and some of the other findings of Rein (1926a, 1926c, 1929) it is possible to summarize his results in rather more general terms than he himself used at the time. He found that

(1) The value of τ_c was of the order of several minutes.

(2) The asympotic amplitude ($V_{app}.G_f$) towards which the current rose was increased as the concentration of the external electrolyte solution increased. Rosendal (1943) obtained equivalent results, as was mentioned earlier (subsection 12.2.c).

These two findings taken together strongly suggest an electrically-aided diffusion of ions into the corneum.

Rein also found that

(3) The asympotic amplitude $V_{app}.G_f$ towards which the current rose was increased more than proportionately with increase in the magnitude of V_{app}, implying that G_f increases with increase in the magnitude of V_{app}.

(4) The time-course of the current depended on the polarity of the applied field, a phenomenon revealed by his use of two electrodes of unequal area known as "probe" and "indifferent", the probe electrode being much smaller than the indifferent.

The polarity dependence produced two cases, A and B, which may be drawn as follows:

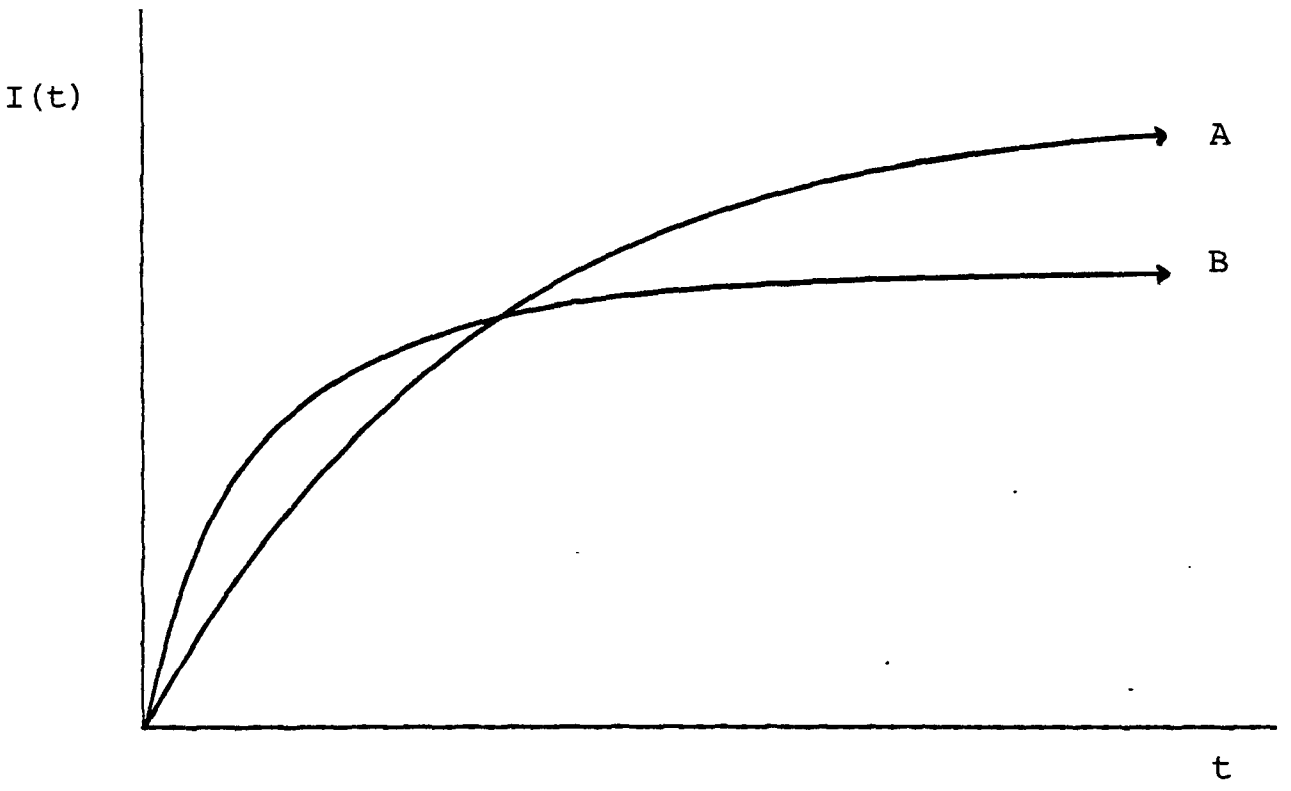

Fig. 12.2.f.I

Case A arises when the probe electrode is of a polarity such as to propel towards the skin ions in the electrolyte solution which have a charge of the *same* sign as the fixed charge of the corneum. Case A therefore arises with "anodic" conduction for skin of positive fixed charge (e.g. when KCl is used) and with "cathodic" conduction for skin of negative fixed charge. Conversely, case B arises when the charges are of *opposite* sign, i.e. with cathodic conduction for skin of positive fixed charge, and with anodic conduction for skin of negative fixed charge.

To interpret these observations it is expedient to turn to the literature dealing with electrically influenced diffusion (electrodiffusion) of ions into membranes. This literature is enormous (cf. Cole, 1972, p.174) and shows that any realistic model cannot be solved without recourse to numerical methods. Here however we shall skate lightly over the surface of the theory and use only enough of it to illustrate the way in which findings such as those of Rein may arise.

Let us begin from two very general assumptions:

(1) that ions can diffuse into the corneum;

(2) that increasing the number of diffusing ions in the corneum will increase its conductivity.

On the basis of these, we may expect a time-dependent current/voltage characteristic curve in which the "dynamic" or "slope" conductance will increase with the magnitude of the applied voltage, just as is indeed found in skin (e.g. Stephens, 1963). Given such a characteristic, electrodiffusion theory then indicates that the system will display an apparent inductance (Teorell, 1953, p.342; Mauro, 1961, p.368; Cole, 1972, p.170 ff). In fact for a step of voltage of magnitude V_{app} the conductance will increase from an initial value $G_i = I_i/V_{app}$ towards a final value $G_f = I_f/V_{app}$ following

$$I(t) = V_{app} \left\{ G_i + (G_f - G_i) \left[1 - \exp(-t/\tau_D) \right] \right\} \qquad (12.2.f.1)$$

or its equivalent

$$I(t) \doteq V_{app} \left[G_f - (G_f - G_i) \exp(-t/\tau_D) \right] \qquad (12.2.f.2)$$

on the simplistic but probably justifiable (Cole, 1972, p.189) assumption of a single time constant, the "ionic redistribution time" τ_D. Equation (12.2.f.1) can be seen by inspection to be modelled by the equivalent circuit

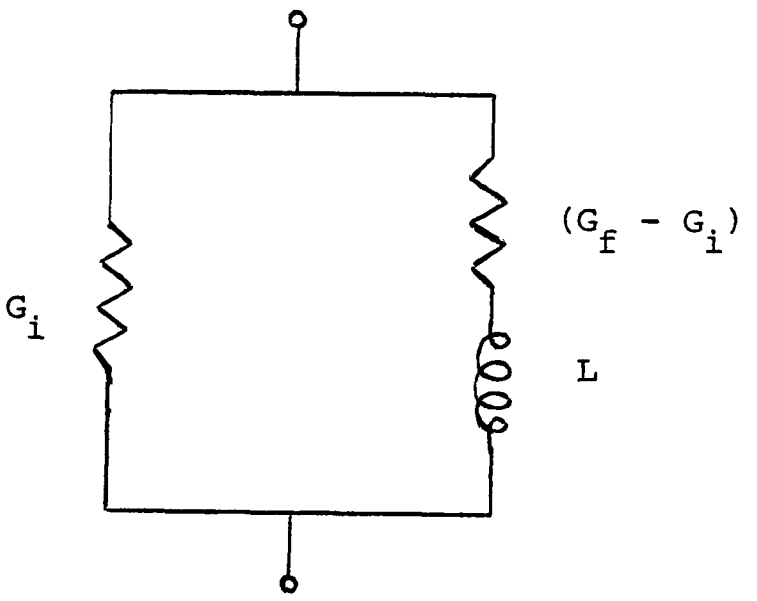

Fig. 12.2.f.II

(cf. Cole (1972, Fig. 2:49) and to predict current-time curves of the form

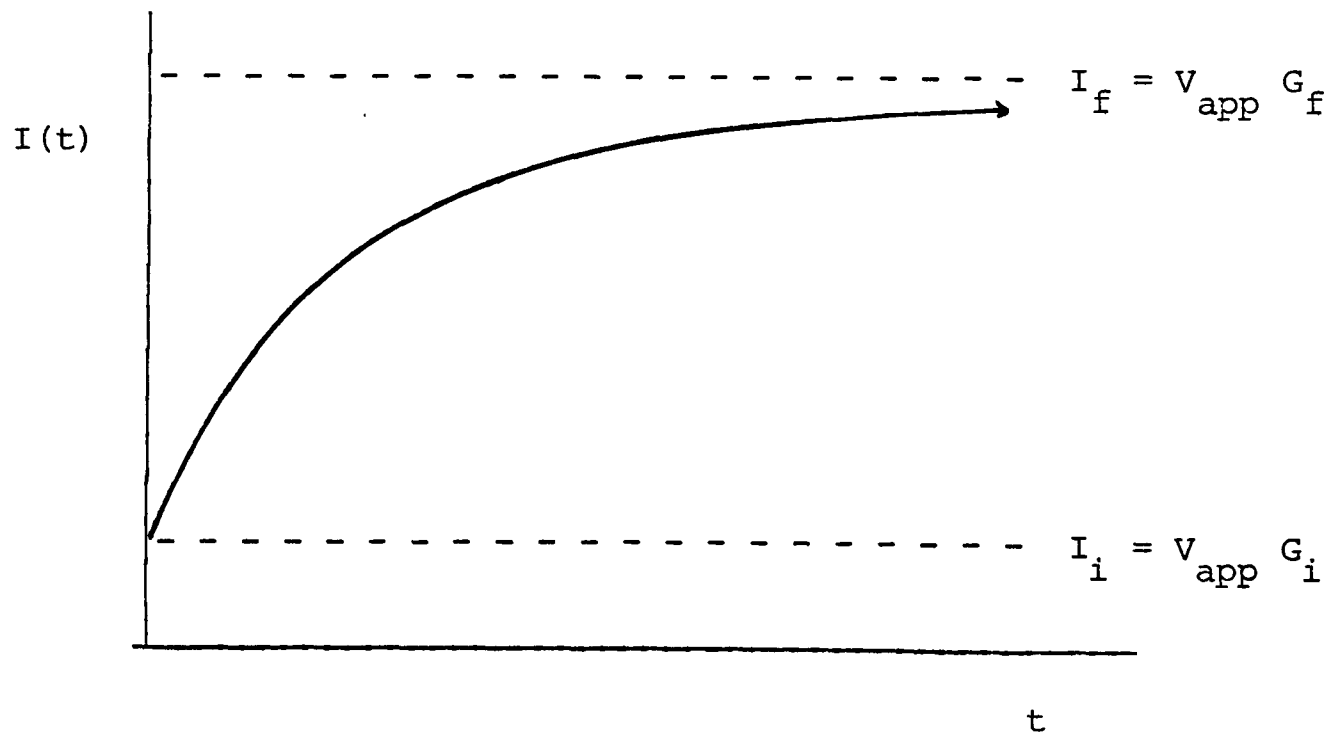

Fig. 12.2.f.III

in response to a step increase in voltage magnitude at t=0 (zero to V_{app} in this case).

Furthermore it may be expected that

$$L = \tau_D / (G_f - G_i) \qquad (12.2.f.3)$$

and

$$\tau_D \approx \frac{\delta^2}{4D} \left(\frac{2kT}{qV_L}\right)^2 \qquad (12.2.f.4)$$

where V_L is the local potential difference across the membrane of thickness δ, in which ions of charge q have a diffusion coefficient D (Cole, 1972, eqn. 2.23).

Now, can the results of Rein be interpreted reasonably on the basis of this simplified electrodiffusion theory? Firstly, note that assuming $\tau_D = \tau_c$, the form of equation (12.2.f.2) is exactly that of (12.2.c.2) which was chosen empirically. Thus the theory does describe the crude form of the experimental results. Secondly, equation (12.2.f.4) predicts that as the electric field applied across the skin is increased in magnitude, the observed ionic redistribution time or time constant τ_D will decrease, and this may be quite a sizeable effect since the dependance upon voltage is as an inverse square. The decrease in time constant with increase in voltage observed by Rein (finding no.1, mentioned earlier) can therefore also be interpreted on the basis of electrodiffusion.

As to the magnitude of G_f, it would seem from Rein's finding no.2 above to have some functional dependence upon the number of ions in the electrolyte solution in contact with the skin, and it must also depend upon the mobility of ions within the skin. These ideas agree with the theoretical expectation (cf. Scheuplein, 1978, p.1703 ff) that for unit area

$$G_f = KC_vD/\delta \qquad (12.2.f.5)$$

where C_v is the concentration of ions in the electrolyte solution, and K is the solution-to-corneum ionic partition coefficient.

Now, to reproduce the relative shapes and sizes of the two types of current-time curve observed by Rein, it is necessary to have both G_f and τ_D relatively smaller for "case B" than for "case A". Let us consider how this might arise, thinking of G_f first. In "case B", ions of the opposite sign to that of the fixed charge of the corneum are being propelled into the skin. It might therefore be expected that K will be increased relative to "case A" by electrostatic attraction operating instead of repulsion. However, since D is likely to be considerably reduced by the temporary trapping of ions by the fixed charges of the proteins of the corneum, (cf. Rose, 1955, p.1539), it is quite possible that on balance G_f will be reduced for "case B" relative to "case A", just as the model requires.

A relative decrease in τ_D for "case B" is however less readily predictable. As we have just seen, in "case B", D is expected to be relatively reduced, but this from (12.2.f.4) would by itself lead to a relatively increased value of τ_D. Thus it seems that the effect of the addition to V_L, caused by the fixed charge of the corneum being of opposite sign to the probe electrode , outweighs the situation and τ_D is thereby reduced after all. It has indeed been seen already both from experiment (Rein, 1926b, Fig.3) and from theory (equation 12.2.f.4) that the dependence of τ_D upon V_L appears to be quite strong.

In conclusion, it seems likely that the findings of those workers who have observed a slow increase with time in the conductivity of skin can be interpreted on the basis of diffusive absorption of water by the corneum, together (in appropriate circumstances) with its electrodiffusive absorption of ions.

12.2.g An equivalent circuit for electrodiffusion

The fact that absorption of water by the corneum can be considered for our purposes here to be independent of any applied electric fields, means that this process cannot be modelled simply by an equivalent circuit.

However, the field-dependent electrodiffusive absorption of ions can be modelled in this way, and indeed this has already been done rather simplistically in the circuit of Fig. 12.2.f.II. Since though we also want to model the dependence of G_f and τ_D upon voltage magnitude and polarity, that circuit should be replaced by the slightly more sophisticated one of Fig. 12.2.g.I.

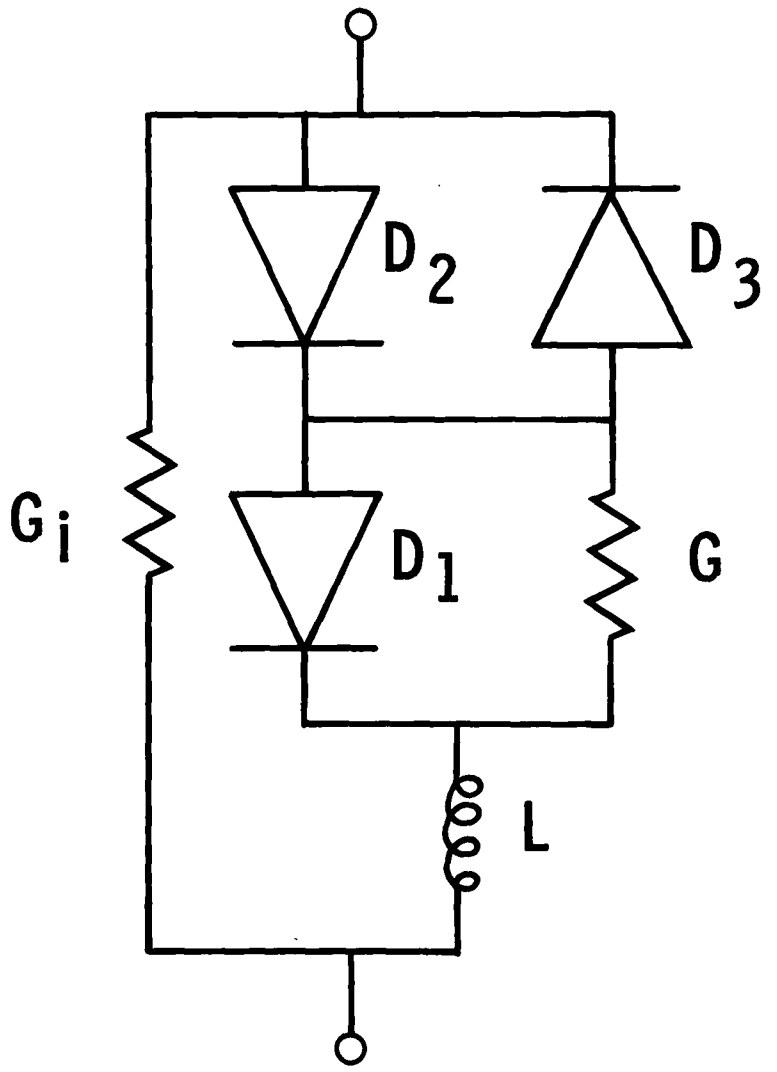

Fig. 12.2.g.I

The action of the diode D_1 is such as to cause the magnitude of G_f to depend upon the polarity of the voltage applied to the circuit. The diode D_1 in Fig. 12.2.g.I has been drawn to suit the case of positive fixed charge of

the skin if it is pointing away from the terminal assumed to represent the surface of the skin - in this instance the top terminal. For negative fixed charge the diode should of course be reversed.

For fixed L it can then be seen from (12.2.f.3) that the observed time constant of the circuit will be relatively increased for that voltage polarity which relatively increases G_f, and such a parallelism between τ_D and G_f is what is required in order to simulate the "case A" and "case B" findings of Rein which were reviewed in the last subsection.

The action of the pair of diodes D_2 and D_3 is such as to cause the magnitude of G_f to increase with increase in the magnitude of the voltage applied across the circuit, and this effect too should be included in a model meant to simulate the behaviour of skin, as of course was demonstrated earlier from the observations of Rein (see his finding no.3 in subsection 12.2.f).

Finally, the conductance G is included in the circuit in order to suitably moderate the modulation of G_f by applied voltage magnitude and polarity.

12.3 Psychophysiology and the electrical properties of skin

12.3.a Introduction

Psychophysiology is, as the name implies, the discipline dealing with the study of the physiological basis of psychology, and thus, together with many other aspects of neurology, it is concerned with the autonomic nervous system. Now one of the functions of the autonomic nervous system is to control the sweat glands in the skin, and therefore it did not take long for early researchers, applying electric currents to the human body as an experimental therapy, to discover that there was some sort of relationship between the "nervousness" of the subject and the electrical conductivity of their skin.

Those interested in the historical development of this discovery may wish to consult Neumann and Blanton (1970), and here it must suffice to say that even at the present day psychophysiologists and others are still interested in measuring the electrical properties of skin as a simple means of monitoring sympathetic tone. Indeed, more investigations of the electrical properties of skin have been published in literature which could be described as psychophysiological than in literature which could not. Nevertheless, as I have said before (Salter, 1979, p.42), the psychophysiologists have been very concerned with the anatomical, physiological and electrochemical basis of the electrical properties of skin, but have tended to underestimate the complexity of the physical aspects, and often indeed to ignore them. The physical aspects have however been tackled more rigorously by people from other disciplines, but they then published their results in a correspondingly widely-scattered literature. Consequently it is one of the purposes of this thesis to begin to weave both the psychophysiological and the non-psychophysiological literature together into a coherent phenomenology of the electrical properties of skin. The resultant synthesis will be summarized in Sections 12.8 and 12.9.

12.3.b The phenomenology of the electrical properties of skin according to the psychophysiological literature

During the last hundred years, psychophysiologists have investigated four, possibly six, empirical indices which collectively have been called "electrodermal measures".

The simplest of these is what is now known as the skin conductance level, or SCL. (The same electrical property is sometimes described by the skin resistance level, SRL, and indeed a debate still continues as to the physiological circumstances in which monitoring the skin in terms of conductance units is more informative than doing so in terms of resistance units, or vice versa.) The SCL corresponds to the reciprocal of the D.C. resistance R_o in the terminology of this thesis, and it is a linear electrical property of skin at low applied voltages, becoming a non-linear property at high voltages, as will be described in more detail in Sections 12.4 and 12.5 which review the large amount of non-psychophysiological literature, and the small amount of psychophysiological literature, relevant to the topic. The SCL of a fully acclimatized, equilibrated and resting subject is sometimes known as the "basal" SCL, or BSCL.

The next simplest index is the skin potential level, or SPL. This is the potential difference between the skin site of interest and some reference site, which is usually abraded unless the epidermis there is naturally very thin, for example under the tongue. The reference site then approximates to a sub-epidermal electrode under the skin site of interest. The SPL is usually between zero and minus 100 millivolts, although for pathological skin its value can sometimes be positive (see e.g. Woodrough, 1976). It is a non-linear electrical property of skin in that an "output" is obtained without any "input" to the subject, thus violating the principle of superposition which is the criterion for "linearity" in a system (see Section 3.4).

The SPL of a fully acclimatized, equilibrated and resting subject can be used to define what is sometimes known as the "basal" SPL, or BSPL.

Now the particular value of SCL or SPL obtaining in a skin site will of course alter with time and many other factors. The alterations with time may however be divided into "tonic" changes occurring over periods of tens of minutes or even hours, and "phasic" changes occurring over periods of seconds or minutes. Such "phasic" changes are nowadays known as skin conductance responses, SCRs, and skin potential responses, SPRs, respectively. Other names have included the "psycho-galvanic reflex phenomenon" (PGR) introduced by the Zürich neurologist Veraguth in 1909, and the "galvanic skin reflex" (GSR) adapted from a term introduced by Gildemeister in 1923. The rather clearer system of terminology used here however is due to Venables and Martin (1967), and fortunately seems to have been widely accepted in the subsequent psychophysiological literature.

Both the SCR and the SPR are non-linear electrical properties of skin, and the phenomenologically simpler of the two is the SCR. The skin conductance response is always "monophasic", that is, it always consists of just a single wave, and this is always a temporary increase in conductance. However, the time-scale of the SCR can vary over fairly wide range between two limiting forms, and these have come to be known as "fast-recovery" and "slow-recovery" respectively (see e.g. Fowles, 1974, pps. 236, 239-251).

The SPR is the most complicated of the electrodermal measures used in psychophysiology. It can be monophasic positive-going or negative-going, or diphasic with an initial negative-going component followed by a positive-going component, or even triphasic. The time-scale of the SPR also varies over a fairly wide range.

12.3.c Equivalent circuits modelling this phenomenology

The phenomenology of the electrodermal measures is complicated enough to have produced a very large literature reporting possible physiological interpretations and experiments designed to test them. By 1968 however, enough work had been done to enable Edelberg to put forward a physiological model, and an equivalent circuit to represent it, which so greatly clarified the whole field that there is little point in recommending that those interested in more details than can be given here should read specialized reviews produced prior to this work of Edelberg. Instead, the reviews by Edelberg himself (1971) and by Fowles (1974) are suggested, and possibly also the short review by Edelberg (1977), although the work of Fowles (1974) seems to adequately represent even the present state of the literature.

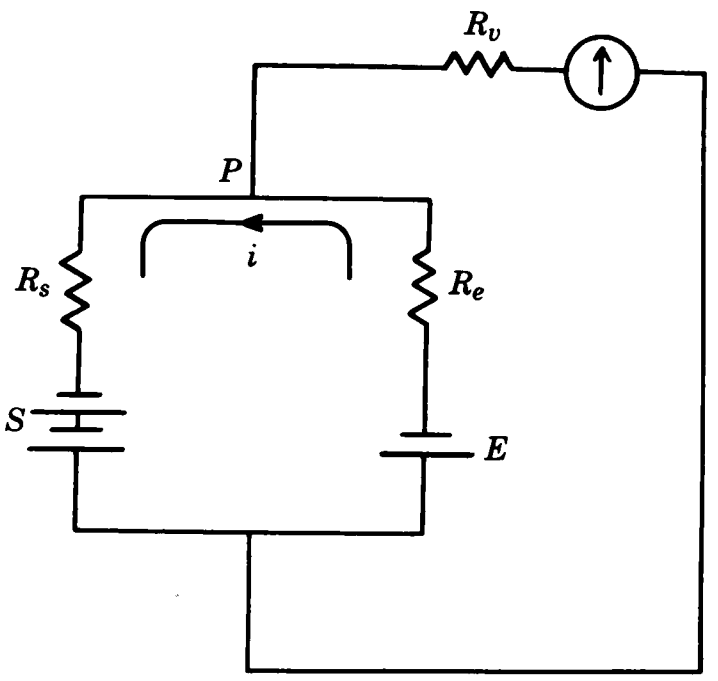

Fig. 12.3.c.I

In 1968 Edelberg proposed the equivalent circuit for skin shown in Fig. 12.3.c.I, arguing that skin could be considered to be macroscopically similar to the "mosaic" type of membrane model applied very generally in biophysics. It has parallel routes across it having different properties. In the Edelberg model there is a surface-negative e.m.f. S associated with the sweat glands, and this is of slightly greater magnitude than a surface-negative e.m.f. E associated with some epidermal membrane or membranes. The resistance R_s denotes the internal resistance of S combined with the resistance in the sweat gland duct between the sweat gland e.m.f. S and the surface electrode. Similarly R_e denotes the internal resistance of E combined with the resistance of the epidermis between the epidermal e.m.f. E and the surface electrode. A voltmeter, symbolized in the Figure by a circle containing an indicator, is shown connected via its own internal resistance R_v to measure skin potential level P in the usual way.

Edelberg (1968) showed that the SPL, P, is a function not only of the values of S and E, but also of the relative magnitudes of R_s and R_e. In this way he was able to qualitatively model the phenomenology of the SCL, SPL, SCR and the monophasic positive, the monophasic negative and the diphasic forms of the SPR on the basis of physiological assumptions which have only needed to be slightly modified since. The Edelberg model has in fact been very fruitful indeed, and despite its simplicity was able to provide a qualitative basis for the understanding of many previously baffling aspects of the phenomenology of the electrodermal measures, for example the apparently contradictory results for the dependence of SPL upon external electrolyte concentration (Woodrough and Watson, 1975).

The clarification of ideas made possible by the Edelberg model however produced better physiological experimentation and a better physiological understanding, which in turn led to the rather better equivalent circuit

representation proposed by Fowles (1974). This is shown in Fig. 12.3.c.II, and Fowles described its relationship to the assumed physiological basis in the following terms:

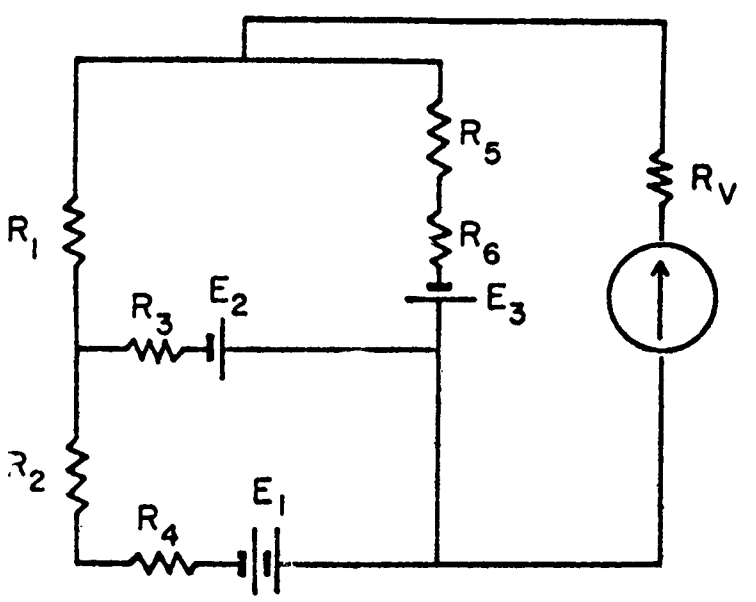

Fig. 12.3.c.II

The Figure shows three sources of e.m.f. and three major pathways for current. The lumen-negative e.m.f. generated across the duct wall in the dermis, E_1, is primarily a function of the sodium concentration in the lumen of the duct. The lumen-negative e.m.f. generated across the epidermal duct wall at the level of the stratum germinativum is E_2. This is probably a function of both the sodium and the chloride concentration in the lumen, but, because of its lower selectivity, will be smaller in magnitude than E_1. The e.m.f. E_3 generated by some permselective "epidermal barrier layer" in the region of the stratum corneum compactum (Fowles, 1974, p.261), if this is worth considering to be different from the stratum

corneum as a whole (cf. Jarrett, 1980, p.2112; Grice, 1980, p.2134), or by the stratum granulosum (Edelberg, 1977, p.326), is a function of the potassium concentration in the interstitial fluid (derived from the blood plasma), and in the externally applied electrolyte. The e.m.f. E_3 will be surface-negative so long as the outer potassium concentration is greater than that of the interstitial fluid.

The most important pathway for current is along R_1 and R_3, representing the resistances of the epidermal duct and the duct wall in the stratum germinativum, respectively. R_1 and R_3 are variable resistances, R_1 changing with duct filling, and R_3 with the trans-ductal water reabsorption reflex (for a review, see Fowles, 1974, pps. 246-250). A second pathway for current is along R_1, R_2 and R_4, where R_2 is the dermal duct resistance and R_4 is the resistance of the dermal duct wall. The variable resistances in this pathway were assumed to be just R_1 and R_2, both of them decreasing with duct filling, although personally I can think of a number of reasons to expect R_4 to be variable as well. The final pathway is along R_5 and R_6 which represent the resistance of the upper corneum and the epidermal barrier layer respectively; R_5 varies with the hydration of the corneum, but R_6 is assumed to remain relatively constant. A fourth pathway, in which current flows into the duct from the corneum and then along the two appendageal pathways, has been omitted in order to avoid complicating the circuit further. Similarly, the resistances of the stratum germinativum and the stratum basale, which would be found in series between the two e.m.fs, E_2 and E_3, have been omitted for simplicity. These resistances are known to be extremely small from stripping experiments (cf. subsection 11.4.a).

Now, when the subject is resting and there is minimal sweat gland activity, reabsorption outpaces secretion in the duct, maintaining high values of R_1, R_2 and R_3 and minimal values of E_1 and E_2. The e.m.f. E_3

becomes the major factor in the measured SPL and consequently this "BSPL" reflects interstitial potassium levels. A small or moderate sweating response decreases the resistance of R_2 and possibly of R_1, producing a slow-recovery SCR. At the same time, lumen sodium concentration rises, resulting in an increase in E_1, and the increased potential plus the decreased ductal resistance produce the slow-recovery negative-going SPR. These two responses cause an increase in both SCL and SPL. Larger sweating responses, or those occurring while the ducts are already partially filled, will further decrease R_1 and R_2. If in the duct the hydrostatic pressure or the sodium concentration reaches a high enough level, a response will be initiated in the epidermal duct wall, decreasing the value of R_3 and generating a small lumen-negative e.m.f. at E_2. This membrane response, part of the water reabsorption reflex, produces the rapid recovery SCR and, at the same time, the positive-going SPR through the shunting effect on E_1. Most of the time however there will be a small initial negative-going component to the SPR as a result of the earlier onset of the negative wave than of the increase in permeability.

This Fowles model is still being recommended in the present literature of psychophysiology (e.g. Mitchell and Venables, 1980), and would therefore appear to be well-founded. However, in 1976 Woodrough pointed out that it took no account of the contribution of hair follicles, and that including this contribution would require a number of other resistances and e.m.f.s to be considered, namely those arising at the various interfaces between dissimilar materials. He also called attention to the interface between the external electrolyte and the stratum corneum. These considerations were then incorporated into the design of an elaboration of the Fowles model. However, in my opinion Woodrough did not take this elaboration far enough, and so this Chapter will extend his approach.

12.2.d The need to consider a wider range of literature

If one reads the non-psychophysiological literature dealing with the electrical properties of skin, one soon becomes aware that the equivalent circuits used in the psychophysiological literature only tell a very small part of the whole story. These circuits do not model the A.C. properties of skin represented by the Cole equation. Neither do they even adequately represent the D.C. properties, since the current/voltage characteristic curve of skin is full of phenomenological surprises not modelled by the Fowles or Woodrough circuits.

Consequently in the remainder of this Chapter an equivalent circuit for skin will be built up which will be as good as, and perhaps better than, the Fowles and Woodrough circuits in modelling the "electrodermal measures" of the psychophysiologists, while also modelling the A.C. properties and all those D.C. properties of skin which can be represented in a circuit of reasonably limited complexity.

To accomplish this, it is necessary to examine the non-psychophysiological literature, to interpret the phenomenology reported there, and to design equivalent circuits modelling it. In Section 12.9 these will then be combined with the phenomenology and circuitry gleaned from the psychophysiological literature, and I hope that the whole will be thought to be greater than the sum of its parts. Certainly nothing like the resultant circuit has been published before, partly because "the two literatures" have not been brought together before.

12.4 The linear region of the I/V characteristic curve of skin

From the literature reviewed already in Sections 4.3 and 9.4 it is apparent that in general the electrical properties of skin depend upon the voltage applied across it. Consequently in the past different investigators using different applied voltages have often observed different phenomenological behaviours, and sadly this has resulted in much confusion and argument. Only in 1949 did Gerstner and Gerbstädt become the first to attempt a classification of the electrical properties of skin in terms of the voltage applied across it, yet even this quite recent work seems unfortunately to have been almost entirely ignored in the non-German literature. The classification devised by Gerstner and Gerbstädt together with that by Kryspin (1965) have however been incorporated into the original and more extensive one used in this thesis (cf. subsection 4.3).

In addition to the slow artefactual skin conductance changes discussed in Section 12.2, and the psycophysiological electrical properties of skin considered in Section 12.3, it is possible to identify other phenomenologically distinctive types of electrical conductance behaviour. In any given expermental arrangement skin will exhibit some or all of the phenomena discussed in Sections 12.2 and 12.3, plus some or all of the phenomena pertaining to four additional "domains" of electrical conductance behaviour. However, these additional domains of conductance behaviour only come into operation above certain voltage thresholds, so the only ones which will be observed are those which have a voltage threshold lower than the voltage being applied across the skin at the time.

In this and the next three Sections, we will consider in detail these four field-determined domains of conductance behaviour in ascending order of voltage threshold.

The first such domain might be said to have no right to be included in this Chapter at all, since it is characterized by linear, not non-linear, electrical conductance. Most investigators assume that their investigations are confined by this linear domain, even though they usually are not. The properties of this very popular domain were therefore considered in detail in Chapter 11, and the linear domain is only briefly mentioned again here in order to provide a reminder of its relationship to the other ones.

The characteristic feature of the linear domain is of course that skin conductance is not noticeably dependent upon the applied voltage magnitude, the applied voltage polarity or the duration of voltage application. (Skin conductance tends to be thought of as a D.C. property which must be measured by D.C. measurements, but of course its value in fact corresponds to the value of $1/R_o$, which is also derivable from A.C. measurements of the complex impedance locus, as described in detail in Sections 4.2 and 8.3, so long as these A.C. measurements are made within the linear domain).

Observations of the existence of this linear domain of skin conductance behaviour have been made by (amongst others) Rosendal (1944, p.201), Gerstner and Gerbstädt (1949), who called it "region a", Edelberg (1967, pps. 18, 19) and Cambrai et al. (1979, Fig.1).

To guarantee that experiments are being conducted entirely within the linear domain of conductance behaviour the voltage applied across the skin must be kept "very low". According to the available evidence this means less than 0.1 volt (Rosendal, 1944, p.201), less than 0.8 volt (Gerstner and Gerbstädt, 1949), less than 0.25 volt (Kryspin, 1965) or less than 0.5 volt (Edelberg, 1967, p.19). Personally I favour the Rosendal figure. Such values are however only estimates of the voltage threshold for the onset of non-linear conductance, which represents the lower voltage boundary of the domain we shall consider next, in Section 12.5.

12.5 "Time-independent non-linearity" in the I/V characteristic curve

12.5.a The onset of non-linearity

The first report of "time-independent non-linearity" which I have been able to find is that of Gerstner and Gerbstädt (1949, p.113), who in the course of investigating the voltage dependence of the impedance of human skin in vivo at 200 Hz, observed that at low voltages the resolved components of the impedance were independent of voltage and of time - this being the "linear" region described in Section 12.4 - but that at higher voltages the impedance components become voltage-dependent, though not time-dependent. This voltage range, which they labelled "region b", thus produces what is here called "time-dependent non-linearity", following the terminology of Kryspin (1965), whose work will be reviewed later. For still higher voltages, Gerstner and Gerbstädt found that the impedance components became not only voltage-dependent but also time-dependent, a response which Kryspin rediscovered and named "time-dependent non-linearity", as will be considered in Section 12.6.

Of course the breakaway from ohmic behaviour on the current/voltage characteristic curve occurs at a particular voltage coordinate (the voltage threshold V_{th}) and a particular current coordinate (the current threshold I_{th}), the values of these thresholds depending upon the state of the skin involved. The available evidence however indicates that the value of V_{th} is less variable than the value of I_{th}, and so in this thesis the non-linear conductance phenomena of skin have been classified in terms of applied voltage rather than applied current or current density.

The evidence is as follows. Edelberg (1967, p.19) recommended that no more than 0.5 volt should be applied across a single skin site if ohmic behaviour was to be obtained, having found that for high skin resistances only small current densities could be applied without non-linearity appearing,

whilst for low skin resistances relatively high current densities could be reached before non-linearity occurred. Also, Bergsmann and Woolley-Hart (1973) measured the current/voltage characteristic curves of the "liver 8" acupuncture point on the left sides of fifteen patients with liver dysfunction, and plotted as Figure II of their paper the relationship between the threshold current for ohmic breakaway I_{th}, and R, the skin resistance below that threshold current. I find that their results can be replotted to fit

$$I_{th} = V_o R^{-n} \qquad (12.5.a.1)$$

with n = 1 quite accurately. V_o is a "critical voltage" which must be applied across the skin before ohmic breakaway occurs. Despite the large variation in I_{th} and R , there exists only a small indeterminacy in the voltage V_o, which may in fact be entirely due to re-plotting errors. The value of V_o for the experimental arrangement of Bergsmann and Woolley-Hart is (4.5 ± 0.5) volts. We will return to the equation above in Section 12.5.g.

12.5.b "Phoreography" and the onset of non-linearity

In 1965 Kryspin reported some investigations of the current/voltage characteristic curve of human skin in vivo using a technique he named "phoreography". This basically involves applying to the skin trapezoidal current pulses, a "chopped ramp" of current, and observing the form of the voltage responses associated with these pulses. Kryspin used a sequence of pulses which increased in amplitude linearly with time, and then decreased in the same way.

He observed that at low applied currents the skin resistance was unaffected by current amplitude, but that at higher currents the associated voltage responses increased less than proportionately, i.e. the skin resistance decreased more and more as current increased above some threshold value. This decreased resistance value would however hold steady with continued current application, and so he called the effect "time-independent non-linearity". At still higher currents the resistance no longer held steady with time and this response he named "time-dependent non-linearity". Our consideration of this latter response and the phenomenon of "hysteresis" will be deferred until Section 12.6. At this point it is only necessary to note that the breakaway from ohmic behaviour on the I/V characteristic curve is associated with non-linearity which is time-independent. Various observations have been made of the physiological and pathophysiological dependencies of the voltage threshold V_{th} and/or the current threshold I_{th} for the onset of non-linearity, but the reports usually do not specify whether the subsequently observed non-linearity was time-independent or time-dependent. From the observations of Gerstner and Gerbstädt (1949) and of Kryspin (1965) however, we may assume that the onset of non-linearity is due to some time-independent mechanism, and these physiological and pathophysiological

investigations can help us formulate educated guesses as to quite what this mechanism may be. Some of the investigations will therefore now be reviewed.

12.5.c The findings of Cambrai and colleagues

Cambrai and his various co-workers have been the most prolific reporters of work using the technique of phoreography. Cambrai and Do Linh (1973) made phoreographic measurements in vitro on skin from the backs of rats, since such skin does not have sweat glands. Their findings were as follows:

(1) Non-linear responses could be observed for six or seven hours provided the skin was irrigated by a properly constituted and oxygenated medium.

(2) The non-linear responses disappear very quickly if potassium cyanide or dinitrophenol is added to the perfusion medium.

(3) There is a relationship between the possibility of observing non-linear responses and the magnitude of the transcutaneous potential difference, in that both vanish at the same time.

In vivo experiments also showed that

(4) Non-linearity disappears after killing the animal.

(5) The (voltage) threshold can be modified by anaesthesia.

(6) The older the animal the higher the voltage threshold.

(7) Non-linear responses disappear when the animals are fed on a lipid free diet.

(8) Increasing levels of erythematous response induced by UV irradiation progressively raise the voltage threshold for non-linear conduction.

It is also of interest to note that the "phoreograms" given by Cambrai and Do Linh as their Figures 4 and 5, show that the time-independent non-linearity immediately above the threshold of ohmic breakaway always represents an *increase* in skin conductance, irrespective of whether the probe electrode is anodic or cathodic. (The same Figures show that there *is* however a polarity dependence in the sign of the change in conductance encountered at higher voltage, time-dependent non-linearity.) The fact that non-linearity which is time-independent seems to depend on the magnitude and not the

polarity of the applied electric field is of course of considerable importance in interpreting its mechanism, and we will return to this in Section 12.5.f.

Cambrai and Do Linh in a later publication (1974) gave details of their experiments on rat skin in vivo which led them to the conclusion that decreases in oxygen consumption and transcutaneous potential difference were associated with increases in the voltage threshold for the onset of non-linearity.

Cambrai continued (1975) by giving details of his experiments indicating that rats fed on a diet deficient in essential fatty acids (EFA) showed an increasing voltage threshold for non-linearity, a decreasing transcutaneous potential difference (which he called "resistance at zero current") and an increasing flux of transepidermal water loss.

Recently, Cambrai et al. (1979) have published very interesting investigations of psoriatic human skin in vivo using A.C. measurements of impedance magnitude and phase angle, and D.C. phoreographic measurements of the voltage threshold. The results are however stated in terms of the voltage threshold, which they call the "phoreographic index ψ", and a parameter they call "Z (slope)", the slope of a plot of the log of $|Z|$ against the log of frequency between 100 Hz and 1 kHz. This appears to be a frequency range for which the slope is approximately maximal, and were it maximal it could from the Cole equation be seen to be equal to (m - 1) in the notation of this thesis. (Incidentally the values of Z (slope) given in the paper must in fact be negative.)

The closeness of "Z (slope)" -1 to m was tested as follows. In their Table 1, Cambrai et al. provide the mean values (± standard deviation) of skin impedance modulus and phase angle obtained on 15 subjects including three normals. Only two frequencies are reported, 5 Hz and 1 kHz, but

assuming R_∞ = 0 makes possible a rough fit to the Cole equation (cf. Table 10.3.a.A). The results are

	CONTROL (3 subjects)	PSORIATIC (12 patients)
R_o =	1.34 MΩ	226 kΩ
m =	0.1367	0.4533
[cf. "Z (slope)" - 1 from Table 1 of Cambrai et al. (1979) =	0.18 ± 0.02	0.44 ± 0.04]

Table 12.5.c.A

Consequently I think that it is justifiable to discuss the trends in "Z (slope)"-1 observed by Cambrai et al. as if they had been observing trends in m.

Cambrai et al. have also provided phorographic measurements of the applied voltage resulting in breakaway from ohmic behaviour, i.e. the non-ohmic threshold voltage Vth, and of the skin resistance observed for lower applied voltages. Their values were:

	CONTROL (3 subjects)	PSORIATIC (12 patients)
V_{th}	0.69 ± 0.11 volts	1.15 ± 0.20 volts
D.C. subthreshold ohmic resistance	651 ± 206 kΩ	134 ± 52 kΩ

Table 12.5.c.B

The fact that the values of D.C. subthreshold ohmic resistance obtained using phoreography are smaller than the values of R_o obtained using skin impedance determination may arise because different sites were used for the

different techniques (p.205), or because Cambrai et al. were more careful not to hydrate the corneum when making the skin impedance measurements, and indeed used a "modified Edelberg" formulation for the contact gel (cf. subsection 9.3.b). Note however in particular from these various results that *in psoriasis the D.C. resistance is decreased, the value of m is increased, and the non-ohmic threshold voltage V_{th} is increased.* We have considered the negative correlation of R_o and m in the last Chapter, (cf. Section 9.3.a), and later we will also examine the negative correlation of R_o and V_{th}.

Cambrai et al. (1979) continued their paper by reporting investigations of the clinical responses to three different treatments for psoriasis measured in terms of the parameters m and V_{th}. For the details of the treatment regimes the original paper should be consulted, but the findings were:

(a) Using Dithranol (Cignolin) 0.2%

m *begins* to decrease towards normal values *after* 3 days (2 patients, nos. 9 and 4) and *at* 3 days V_{th} is completely restored to normal (1 patient only, no.4).

(b) Using corticosteroids (difluoroprednisolone 0.05%

Patient no.3: m and V_{th} were both restored to normal at 3 days.

Patient no.1: m was normal at 3 days but V_{th} was *not* restored to normal even at 9 days.

Patient no.2: the results were stated (p.203) to be "practically identical" - but not to which of the other two.

(c) Using photochemotherapy (0.7 - 1.8 J/cm^2/session)

Only two of the four patients showed clinical improvement or change in electrophysiological responses with treatment. They were

Patient no.5: m almost back to normal at 11 days.

V_{th} much improved at 3 days but becoming progressively more abnormal even at 11 days.

Patient no.6: m back to normal at 9 days.

V_{th} back to normal at 5 days but becoming progressively more abnormal even at 10 days.

12.5.d The conclusions of Cambrai and colleagues

Cambrai and Do Linh (1973) concluded from their experiments on rat skin that the possibility of observing breakaway from ohmic conduction depended upon there being normal, healthy living layers of the epidermis and (though not in rat skin) normal healthy sweat glands. If the cell membranes of the glands or the living layers of the epidermis became hypopolarized for whatever reason, then the value of V_{th} would increase.

The same conclusion that non-linearity reflected the health of living processes in the living cells of the skin was restated by Cambrai and Do Linh (1974) and by Cambrai (1975).

As we have seen, Cambrai et al. (1979) were able to test this hypothesis in human skin by observing the value of V_{th} and of m as a function of known pathology and a known (average) time-course of restoration of normal physiology. They concluded that the value of V_{th} is determined by the degree of normality of function of the living layers of the epidermis. They also concluded that the restoration of a normal value of m depends upon the restoration of a normal granular layer and orthokeratosis.

12.5.e Criticisms of the conclusions of Cambrai and colleagues

Cambrai et al. (1979) have clearly demonstrated that in psoriatic patients the **phoreographic** threshold for non-linearity, V_{th}, can be restored to normal values before the corneum can be replaced by normal keratinocytes. *Thus the non-linear conductance increase is not likely to originate in the corneum itself.* They therefore postulated that these increases take place in the granular or some other epidermal layer under the corneum, the granular layer (the stratum granulosum being preferred because of the known association of the non-linear phenomena with transcutaneous potential difference, (Cambrai and Do Linh 1974, Cambrai 1975), the epidermal component of which appears to be generated in or near this region (cf. Edelberg, 1977, p.326).

A serious criticism of this interpretation is however that conductance increases in or below the granular layer could only affect skin resistance by a small percentage, since the corneum is in series with these deeper layers and has a relatively high resistance even if it is pathological, as may be proved by stripping experiments (e.g. Rosendal, 1943; Gerstner and Gerbstädt, 1949; Pfister and Schulz 1966; Yamamoto and Yamamoto, 1976a). Moreover, if these interpretations of Cambrai et al. were correct, the sufficiently supra-threshold current/voltage characteristic would, if extrapolated back towards lower voltages, intercept the origin of the I/V graph. Experimentally however such a conductance limit is never observed (assuming the use of non-polarizable electrodes).

While the association of the non-linear effects with living processes in the skin seems well enough proven, it is not at all firmly established that the most relevant processes are in the living layers of the epidermis and not in the appendages. Not only would a predominant dependance upon

the living layers of the epidermis produce a form of response which is not seen, as we have noted above, but also a dependence upon the appendages has not in fact been excluded as was claimed. Cambrai and Do Linh (1973, p.9) state that they observed non-linear effects in rat skin without sweat glands, but with hair follicles and living epidermal cells, and also in human skin "deprived of any hair", but with living epidermal cells and presumably sweat glands. They then assumed arbitrarily that the common factor had to be living cells of the epidermis, and apparently ignored the fact that in both cases skin appendages were still present, though possibly of different types.

In the next Section we will therefore argue for *a predominant dependence of* V_{th} *upon the permeability of the cells of the skin appendages*. Field-dependent non-linearity in living cells of the skin is certainly more likely to occur at lower applied fields in the appendages than in the living layers below the corneum because of the potential-dividing action of the resistance of the corneum.

12.5.f A proposed new interpretation of the findings of Cambrai and colleagues

Suppose that V_{th} depends mainly upon the state of permeability of the cells forming the "membrane" lining the ducts of the skin appendages. We would then still expect in comparison with the results of Cambrai and Do Linh (1973) cf. Section 12.5.c) that:

(1) the non-linear response could only be maintained while the physiological process of the skin could be maintained reasonably normal,

(2) the non-linear response could be abolished by cell poisons,

(3) V_{th} would rise towards infinity as the permeability of the duct cells increased, and that this would be associated with a greater or lesser reduction in the transcutaneous potential difference, since this results predominantly (Edelberg, 1968) from skin appendages, meaning not only the sweat glands but also (Woodrough,. 1976, pps.92-100) the pilo-sebaceous apparatus;

(4) non-linear responses disappear after killing the animal because the cells begin to break down and the appendages become more permeable;

(5) the value of V_{th} can be modified by anaesthesia because this will affect the permeability of the cells lining the appendageal ducts. It should be noted that Cambrai et al. (1979, p.203) state that one patient "was so emotive that no phoreographical response could be obtained".

(6) Increasing age may imply decreasingly active living processes in the appendageal membranes and thus increasing permeability.

(7) A diet deficient in essential fatty acids causes decreased sebum secretion in rats (Cambrai, 1975, p.485) again implying that skin appendages are involved. TEWL is also raised (e.g. Grice, 1980, p.2139-2143).

Also, if the skin appendages are predominant in producing the non-linear response above the non-ohmic breakaway threshold, then there would be no limit to the skin conductance since the appendages are in parallel with the highly-resistive corneum, and indeed no limit is observed.

It may be thought that the work of Cambrai et al. (1979) argues against the predominance of skin appendages. Considering firstly the results for m, those obtained with Dithranol, corticosteroids and photochemotherapy are indeed consistent with the hypothesis that the restoration of a normal value of m depends upon the restoration of a normal granular layer and orthokeratosis. But it may be concluded, since we know m to be so dependent upon the hydration of the corneum (subsection 11.9.h), that the reduction in m with healing is a consequence of the reduction in transepidermal water loss resulting from the restoration of orthokeratosis; TEWL is closely correlated with the severity of psoriasis. (see e.g. Rajka and Thune, 1976; Grice, 1980). *The existence of a normal granular layer per se is then not of primary relevance.*

The results of Cambrai et al.(1979) reported in Section 12.5.c clearly show that there is no direct correspondence in the time-courses of m and V_{th}. Thus we must examine the "epidermal hypothesis" for V_{th} entirely on its own merits. Though Cambrai et al. hypothesized that the value of V_{th} is determined by the degree of normality of function of the living layers of the epidermis, this conclusion is questionable. In particular, the response of patient no.1, on the basis of the quoted effect of corticosteroids in restoring the granular layer in two days and a normal mitotic index in four, flatly contradicts their hypothesis. Patient no.3 and, possibly patient no.2, may however support the hypothesis. For the Dithranol results, the one patient whose response is quoted (no.4) can only just be

made to support the hypothesis in the light of the information in Table 3 of Cambrai et al. concerning the biological action of Dithranol. For the photochemotherapy results, both patients' responses can neither support nor contradict the hypothesis because measurements were discontinued too soon (at least by the timescale for the biological action of PUVA given in Table 3). Thus two results, possibly three, are in favour of the hypothesis, one is against and two are inconclusive. Consequently the evidence in favour of the hypothesis is at best very weak, and it is submitted here that in view of the attractiveness of our proposal, which avoids predicting the wrong form of current/voltage characteristic, that other effects, i.e. those involving the physiology of the skin appendages, may in fact dominate in the determination of V_{th}. What might such effects be?

The biological evidence available to date is still far too scanty to decide the biophysical mechanism of time-independent non-linearity. Consequently, just three suggestions will be offered here, in the light of the observation (Section 12.5.c) that time-independent non-linearity always seems to produce an increase in the conductance of the skin, and thus is apparently dependent only on the magnitude of the applied electric field and not its direction.

Firstly, space-charge-limited conduction in the appendageal membrane

The theoretical and phenomenological literature covering space-charge-limited conduction (SCLC) in solids is very extensive, but a simplistic theory for the present problem is given by Lampert and Mark (1970, pps.17-29). SCLC has been suggested for biological membranes by Agin (1967). Externally, we observe the larger of two currents: an ohmic current due to charge carriers intrinsic to the material, and an SCLC current due to carriers injected into the material. This latter current increases more than

proportionally with applied voltage and so there is a breakaway from ohmic conduction at some "turnover voltage" which in our case would correspond to V_{th}.

Using the following results of Cambrai et al. (1979)

	CONTROLS	PSORIATICS
Threshold voltage for onset of non-linearity, V_{th}	0.69 volts	1.15 volts
D.C. resistance for subthreshold voltages, R_o	651 kΩ	134 kΩ
threshold current for onset of non-linearity, I_{th}	1.06 μA	8.58 μA

it is possible to construct the graph shown in Fig. 12.5.f.I.

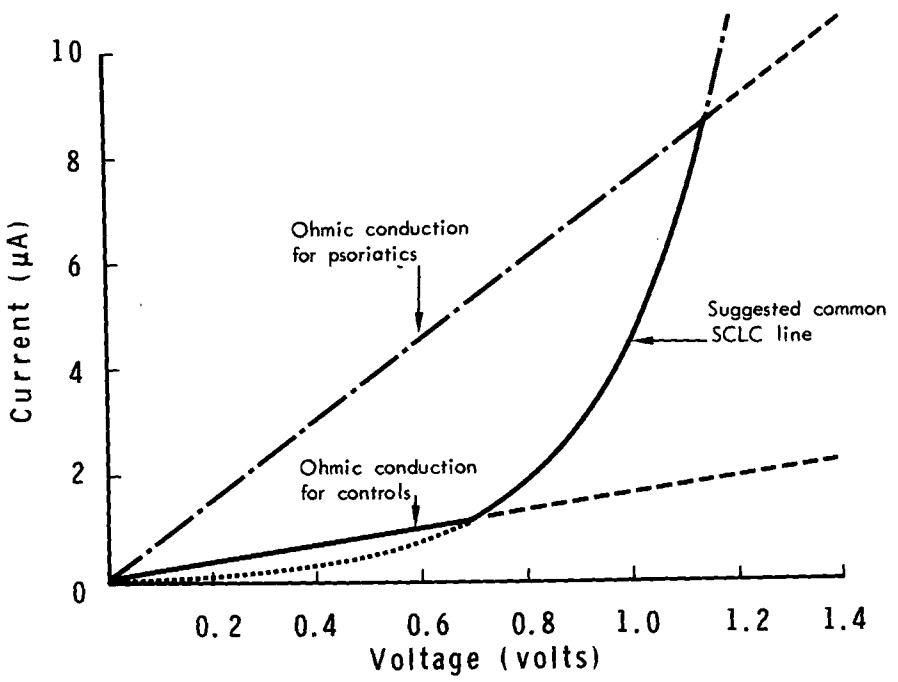

Fig. 12.5.f.I

proportionally with applied voltage and so there is a breakaway from ohmic conduction at some "turnover voltage" which in our case would correspond to V_{th}.

Using the following results of Cambrai et al. (1979)

	CONTROLS	PSORIATICS
Threshold voltage for onset of non-linearity, V_{th}	0.69 volts	1.15 volts
D.C. resistance for subthreshold voltages, R_o	651 kΩ	134 kΩ
∴ threshold current for onset of non-linearity, I_{th}	1.06 μA	8.58 μA

it is possible to construct the graph shown in Fig. 12.5.f.I.

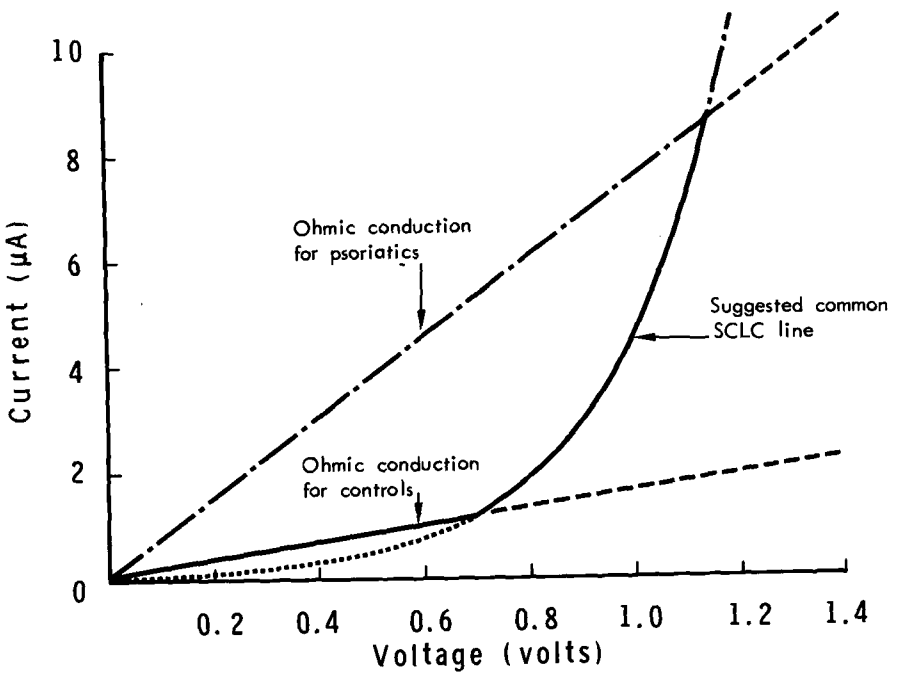

Fig. 12.5.f.I

proportionally with applied voltage and so there is a breakaway from ohmic conduction at some "turnover voltage" which in our case would correspond to V_{th}.

Using the following results of Cambrai et al. (1979)

	CONTROLS	PSORIATICS
Threshold voltage for onset of non-linearity, V_{th}	0.69 volts	1.15 volts
D.C. resistance for subthreshold voltages, R_o	651 kΩ	134 kΩ
∴ threshold current for onset of non-linearity, I_{th}	1.06 μA	8.58 μA

it is possible to construct the graph shown in Fig. 12.5.f.I.

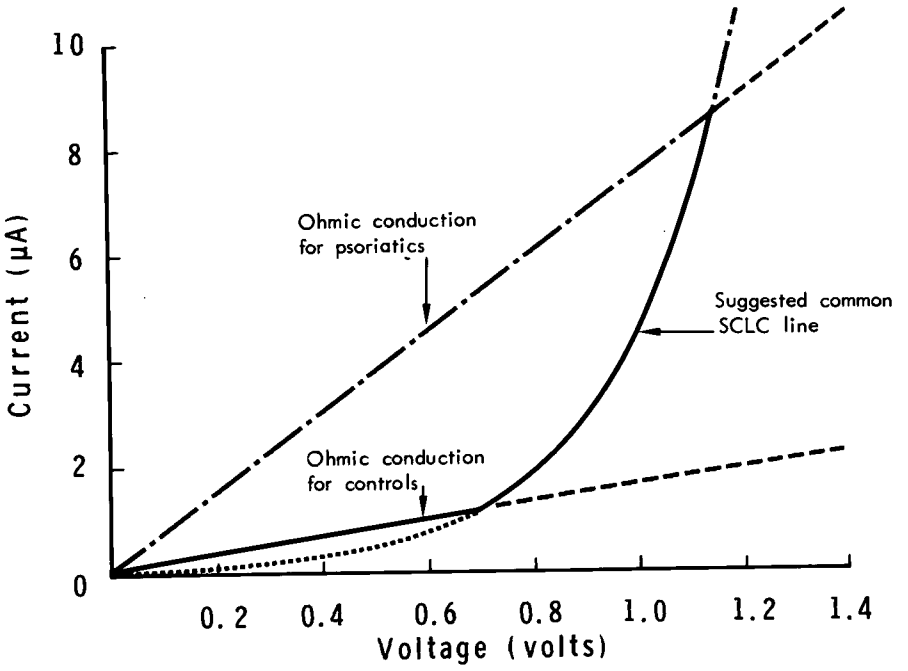

Fig. 12.5.f.I

The fitted SCLC contribution is given by

$$I = a V \exp (b V)$$

with $a = 1.43431 \times 10^{-7}$ and $b = 3.43635$, having assumed for simplicity a uniform distribution of SCLC trap energies (cf. Lampert and Mark, 1970, eqn. 2.31, and also pps. 80, 155, 156).

As can be seen from the graph, this model predicts that V_{th} increases as R_o decreases (i.e. as the ohmic conductance increases), which is the trend observed clinically.

Secondly, the Wien disassociation effect in appendegeal membranes

Bass and Moore (1973, pps. 163 - 167) have discussed at some length how the Wien ionic dissociation effect is likely to be important in depolarizable biological membranes. The theory of the effect has been given by Onsager (1934), and the basic idea is that ionic dissociation is increased non-linearly by strong electric fields. Thus when an applied field sufficiently exceeds the random local fields in a material the Wien effect will lead to a non-linear increase in conductance.

Thirdly, the "punchthrough" phenomenon in appendageal membranes

Coster (1965) considered a particular and rather specialized type of membrane containing two apposed layers having fixed charges of opposite signs, and investigated theoretically the behaviour of this membrane over a wide range of applied potential difference. He predicted that such a membrane would have an I/V characteristic curve rather like that of a pn junction diode, and that above a certain threshold of hyperpolarization, a large increase in membrane conductance could be expected due to "punchthrough" of the depletion layer between the zones of opposite fixed charge. The model membrane would thus show behaviour similar to that of a Zener or avalanche-breakdown diode.

These predictions were confirmed by experiments on plant cell membranes, and since 1965 the theory has been extended and further tested experimentally (e.g. Williams and Bradley, 1968; Coster, George and Simons, 1969; Coster, 1973a, 1973b). Artificial membranes have also been found to exhibit similar behaviour (Rosenberg, 1971).

A whole cell would of course have to be modelled by two such membranes placed in series, with the sides of the same fixed charge facing each other. The conductance behaviour of this "cell" would then be similar to that of two Zener diodes connected in series but facing in opposite directions, a combination usually called a "voltage reference diode", because if the magnitude of the potential difference applied across it is small it has a very low conductance, but as the magnitude of the potential difference exceeds a certain threshold value the conductance begins to increase very rapidly with further increase in the magnitude of the applied potential difference.

This is exactly what is found for the case of "time-independent non-linearity" in skin, and so whether or not the biophysical mechanism of it is indeed "punchthrough" of the membranes of the appendageal duct cells, a voltage reference diode will be used in the equivalent circuit modelling this aspect of the electrical phenomenology of skin.

12.5.g An equivalent circuit to model the new interpretation

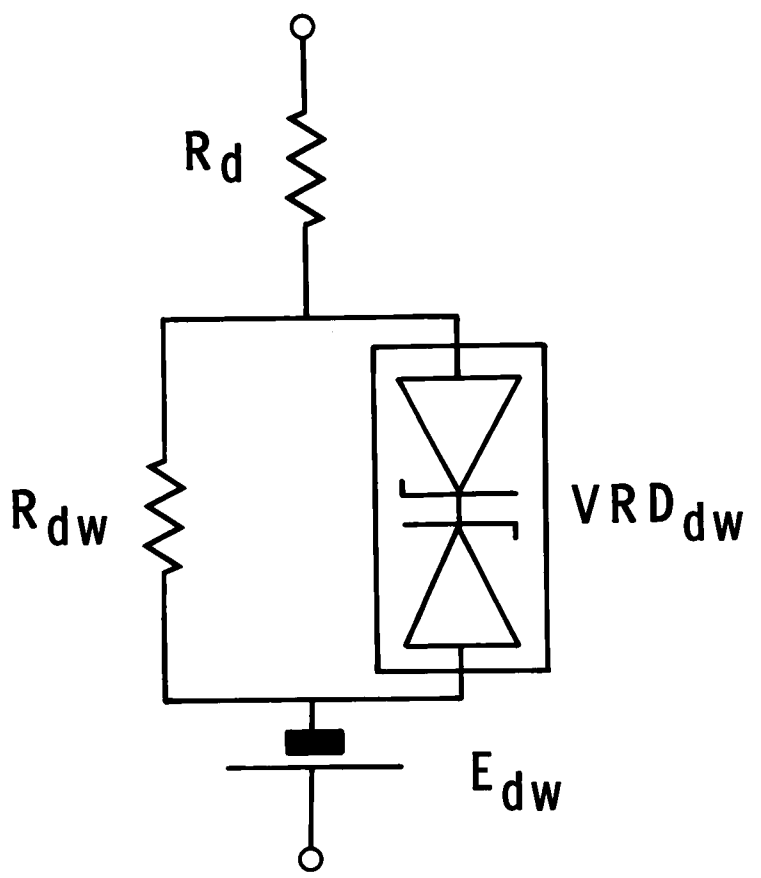

Fig. 12.5.g.I

This is shown in Fig. 12.5.g.I. The circuit is intended to model conduction through generalized skin appendages. The resistor R_d represents the resistance of the lumen or duct of such appendages, and is a simplification which will be elaborated in Section 12.6. The other circuit components represent the properties of the "membrane" of cells forming the duct wall. This "membrane" is basically represented by the resistor R_{dw} in series with the e.m.f. E_{dw}, following the concepts of Finkelstein and Mauro (1963), but the resistor is shunted by a voltage reference diode VRD_{dw} to model the fact that if the magnitude of the voltage applied across the cells of the "membrane" exceeds some threshold value, their conductance will increase considerably. The e.m.f. E_{dw} arises because of the difference in composition between the fluids inside and outside the duct wall.

Now if the voltage reference diode has a voltage V_{VRD} applied across it when a voltage V_{app} is applied across the skin, we may write approximately

$$V_{VRD} \simeq \frac{R_{dw}}{R_d + R_{dw}} (V_{app} - E_{dw}) \qquad (12.5.g.1)$$

and breakaway from ohmic conduction will begin at some critical value of $V_{VRD} = V_{crit}$, sufficient to cause hyperpolarized breakdown of one of its component diodes. Thus the externally applied voltage at the ohmic breakaway, V_{th}, can be identified from (12.5.g.1) as

$$V_{th} \simeq V_{crit} \cdot \frac{R_d + R_{dw}}{R_{dw}} + E_{dw} \qquad (12.5.g.2)$$

Consequently if the duct wall is abnormally permeable for whatever reason, i.e. if R_{dw} is abnormally low, then V_{th} will be abnormally high, that is, it will be very difficult to elicit a "phoreographical response". This agrees with the results obtained both in rats and in man, particularly recalling the patient of Cambrai et al. (1979, p.203) who was "so emotive that no phoreographical response could be obtained".

Finally, note that when conduction through the appendages dominates,

$$I \simeq \frac{V_{app}}{R_d + R_{dw}} \qquad (12.5.g.3)$$

and if $I = I_{th}$ when $V_{app} = V_{th}$, then

$$I_{th} \simeq \frac{V_{th}}{R_d + R_{dw}} \qquad (12.5.g.4)$$

and so from (12.5.g.2)

$$I_{th} \simeq \frac{V_{crit}}{R_{dw}} + \frac{E_{dw}}{R_d + R_{dw}} \qquad (12.5.g.5)$$

but the second term is likely to be negligible by comparison with the first, so

$$I_{th} \simeq \frac{V_{crit}}{R_{dw}} \qquad (12.5.g.6),$$

and this expression very nicely interprets the relative variability of I_{th} and "R", plus the relative constancy of "V_o", which was found in subsection 12.5.a when examining the experimental results of Bergsmann and Woolley-Hart (1973) - compare (12.5.g.6) with (12.5.a.1).

12.6 Short-time-constant conductance perturbations: "time-dependent non-linearity"

12.6.a A description of the phenomenon

For applied voltages rather larger than those required to produce the phenomena of time-independent but voltage-dependent conductance which were considered in the last Section, another "domain" of conductance behaviour is entered. The particular value of the voltage threshold which must be exceeded in order to enter this domain depends upon various factors, including the polarity of the probe electrode compared with that of the fixed charge of the corneum. For applied voltage magnitudes larger than the relevant threshold, the conductance of the skin under the probe electrode is found to either increase *or decrease* with time, the direction of change depending upon the polarity of the probe electrode compared with that of the fixed charge of the corneum. Consequently the differences marking off the phenomenology of this domain of conductance behaviour from that of the domain of time-independent non-linearity (which was examined in the last Section) are principally that at these higher voltages the changes in conductance now depend upon time as well as upon voltage, and that the changes may be increases or decreases, not just increases.

The voltage-induced perturbations of conductance are reversible, the local electric field magnitude determining their maximum amplitude and the value of the time-constant governing the approach to equilibrium. This time constant is however usually of the order of tens of seconds, which on the basis of the evidence reviewed in subsection 12.2.b tends to suggest that equilibrium is regained by means of a transport process operating through the skin appendages.

12.6.b Some observations of the phenomenon

Gildemeister and Kaufhold (1920, pps. 156, 157) used voltages of 1.5 - 16.4 volts applied to electrode systems of zinc/zinc sulphate/Ringer solution/skin. They stated that above a certain applied voltage, skin resistance decreased with time for anodic conduction and increased with time for cathodic.

In 1922 Ebbecke extended these observations by showing that at 4 volts such results were typical when alkaline contact electrolytes were used, but that for acidic electrolytes the polarity dependence was reversed (Table 12.6.b.A; cf. subsection 12.2.e and Table 12.2.e.B).

Table 12.6.b.A Some observations by Ebbecke (1922, pps. 320, 321)

[redacted]

Rein (1926b) obtained results confirming this behaviour, but also showing other phenomena discussed in Sections 12.2 and 12.7. In Figures 4-7 of his paper he shows graphs of current flow at constant applied voltage (5 volts). There is in every case a slow increase in conductance with time such as was in subsection 12.2.f attributed to electrodiffusion of ions into the corneum (see Fig. 12.6.b.I). Superimposed upon this slow trend are conductance perturbations with a much smaller time-constant, which is important evidence of their dependence upon a difficult mechanism. These fast conductance perturbations, caused by Rein reversing the polarity

of the probe electrode every minute, are increases or decreases depending on the polarity of the probe electrode compared with that of the fixed charge of the corneum, the fixed charge polarity itself depending upon the electrolyte solution being used (subsection 12.2.e). The graphs also show that the current density eventually rises to such a value as to lead to the "breakdown" phenomenon which will be discussed in the next Section, 12.7, this breakdown being manifested in general as a diminution, abolition, or partial or full reversal of, the effects being considered here, namely the short-time-constant conductance perturbations.

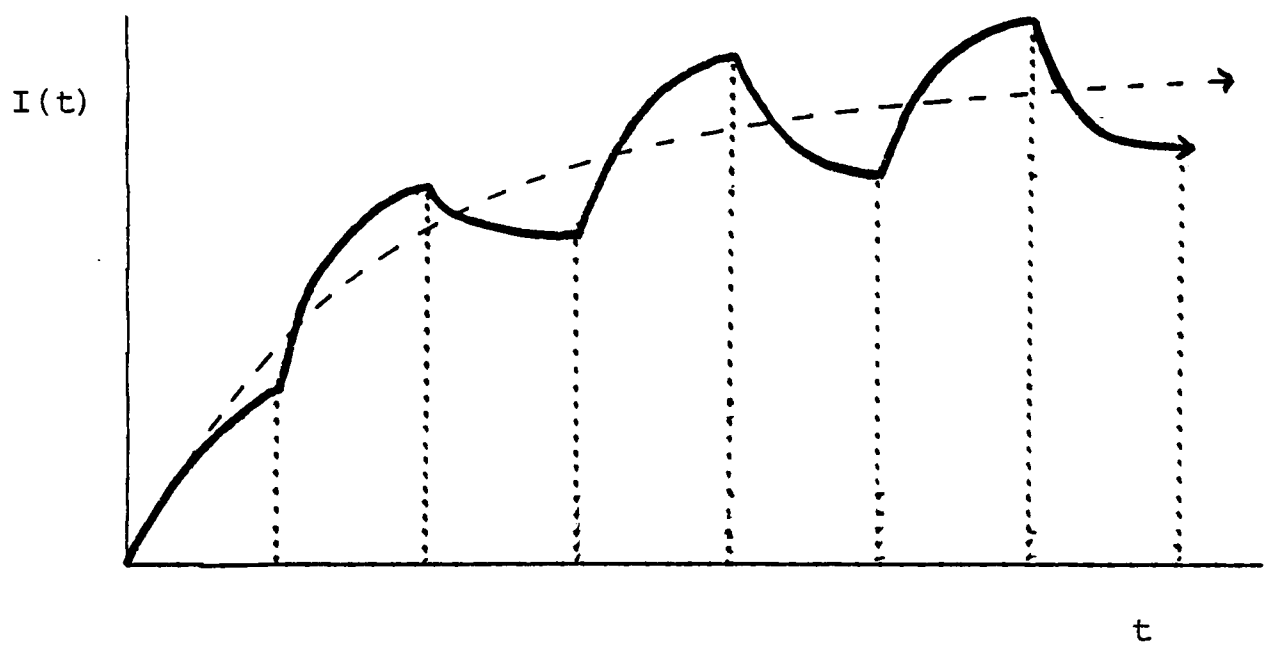

Fig. 12.6.b.I A schematic graph to show the general form of the results displayed by Rein in his Figures 4 - 7 (1926b); the successive vertical lines indicate successive reversals of the probe electrode polarity. ("Breakdown" phenomena are not shown here).

Rosendal also investigated these conductance perturbations, and published graphs (1943, Figs. 4 - 6) of skin resistance against time which showed results corresponding to the effects drawn in Fig. 12.6.b.I. In this series of experiments Rosendal used KCl and the contact electrolyte, and found that the skin resistance increased with time for anodic conduction and decreased with time for cathodic conduction. These findings agree with the results of Ebbecke and the (pre-breakdown) results of Rein, if we accept the conclusions reached in subsection 12.2.e as to the action of KCl on the corneum. In a later series of experiments (1944, Figs. 2 - 5) Rosendal obtained similar results using other contact electrolytes.

At 2 volts the time-constant of these perturbations in skin conductance was about two minutes, whereas at 5 volts Rein's results (1926b, Figs. 4 - 7) show a value of about thirty seconds. The results of Ebbecke (1922, p.320, 321), obtained at 4 volts, also imply time constants of the order of a few tens of seconds.

Finally, and much more recently, Edelberg (1971, Fig. 15.2) showed that for high constant currents applied via a micropipette to areas of corneum between sweat glands, the magnitude of the associated potential difference produced across the skin increased with time for anodic conduction and decreased for cathodic. These results correspond to the behaviour found by Rosendal, although the nature of the electrolyte contained in the micropipette is not reported.

The investigations of Rein, Rosendal and others have thus demonstrated that under certain conditions skin conductance can depend upon both voltage and time in the distinctive manner described in the last subsection. This "domain" of conductance behaviour corresponds to "region c" in the classification of Gerstner and Gerbstädt (1949), and to "time-dependent-non-linearity" in the work of Kryspin (1965). The applied voltage necessary

to produce these phenomena appears however to vary with skin site and experimental conditions, since there is no common value published in the literature. All that can be inferred from this literature is that to produce these phenomena, and/or avoid other ones, the applied voltage should be between 0.1 and 2 volts (Rosendal, 1944, p.201, and Rosendal 1943, p.141); greater than 3 volts (Gerstner and Gerbstädt, 1949, cf. Ebbecke 1922, Rein 1926b), or greater than 0.52 - 7.80 volts (Kryspin, 1965).

12.6.c Electro-osmosis and the work of Rein

Before we can proceed further the concept of electro-osmosis must be introduced, though not in detail, since discussions of this electro kinetic phenomenon may easily be found elsewhere (e.g. Adamson, 1967).

Given our present context, consider a membrane composed of a substance having a fixed electrical charge on its surface. Any pores in the membrane will then be lined with this fixed charge. An electrolyte solution in contact with the membrane will fill the pores such that mobile ions of the appropriate polarity will be attracted to the fixed charge on the walls, and this sheet of charge, together with the fixed charge of opposite polarity, will constitute a double layer. If an electric field is applied across the membrane, then the counter-ions forming the mobile part of the double layer lining the pores will move towards the appropriate electrode, and in doing so will sweep with them some of the fluid in the pores. There will therefore be a net transport of fluid across the membrane.

Also, insofar as the width of the double layer is not small compared with the pore radius, then the movement of the ions of the mobile part of the double layer will dominate the ion flux across the membrane, because there will be reduced room for a countercurrent flow through the centre of the pore of ions of the same polarity as the fixed charge of the walls.

For aqueous fluids, the ions of water will take part in these flows, and so again depending on the radius in relation to the fixed charge density of the walls (determining the so-called zeta potential and thus the double layer thickness), there may or may not be produced a significant change in pH on each side of the membrane.

Now the idea that electro-osmosis may occur in the skin dates back at least as far as Munk (1873), but Rein (1924) was the first to make extensive in vitro tests of the possibility. He arranged 4 cm^2 sheets of human

epidermis as diaphragms separating compartments filled with water or aqueous solutions. He found that when an electric field was applied across the membrane there was a movement of fluid from one compartment into the other. When water was the fluid used, the direction of flow was towards the cathode. From this observation Rein concluded that electro-osmosis was occurring through pores in the skin lined with a fixed negative charge (cf. subsection 12.2.e). As the fluid used was made more alkaline, there was increased transport of it across the skin. Rein interpreted this as an enhancement of electro-osmosis, due to adsorption of hydroxyl ions increasing the negative fixed charge density on the pore walls. Conversely, as the fluid used was made more acidic, the fluid transport decreased, reaching zero at between pH 4 and pH 3. For still lower pH values the fluid transport was reversed in direction, implying that the fixed charge polarity of the skin had become reversed as well, i.e. that skin is amphoteric (Rein, 1926a). A number of other experimental observations made by Rein (1924, 1926a, 1929), (and briefly reviewed by Rothman, 1954, pps. 11 and 51), supported his two main conclusions, namely that skin exhibits electro-osmotic behaviour, and that it has a pH-dependent fixed charge (cf. subsection 12.2.e). It is now known that many other polymer membranes behave similarly (see e.g. Lakshminarayanaiah, 1980, p.126 ff).

Abramson and Gorin (1940a, 1940b) accepted these conclusions, although they qualified them by pointing out that in liquid-filled pores simple diffusion would also be expected to occur besides electrophoresis and electro-osmosis, so that the total velocity of an ion would be the sum of its velocity through the fluid due to diffusion and electrophoresis, and the velocity of the fluid itself due to electro-osmosis:

$$V_{tot} = V_{diff} + V_{ep} + V_{eos} \qquad (12.6.c.1)$$

In this way they became able to understand the results of their experiments on the electrophoretic introduction into the skin of charged substances of particular polarities, because the observed influx was not found to correlate directly with the polarity of the charged substance, as it should have done on the basis of the simpler model used by Rein.

Rosendal (1943) re-investigated another aspect of Rein's electro-osmotic work, that in which he examined the effect of D.C. conduction on the pH and specific conductivity of n/100 kCl contact electrolyte in vivo (Rein 1926a), because changes in the pH and specific conductivity of the electrolyte may follow as a result of the ionic redistributions caused by electro-osmosis. Rosendal perhaps unfairly concluded that the results obtained by Rein and also by himself could not be considered to be significant, but even if this conclusion is justified (and Rosendal was concerned to deprecate the work of Rein - see subsection 12.2.e), it may only mean that the pores involved in electro-osmosis are quite large.

12.6.d Polarization counter-e.m.f., "apparent resistance", and a controversy

There are in the literature two hypotheses as to the origin of the rather large value of the (direct current) resistance of skin. One hypothesis attributes it to the generation of counter-electromotive force. The other hypothesis says it is due to a low mobility of the current carriers through the stratum corneum compactum. Because the proponents of the first hypothesis have frequently explicitly disclaimed the evidence put forward by those favouring the second, and vice versa, an apparently irreconcilable controversy has arisen and still exists even in the more recent literature. For example, the counter-e.m.f. hypothesis is advocated by Keller (1963, p.49), Edelberg (1967, p.30), Venables and Martin (1967, p.60), Maxwell and Barton (1971, p.95), Greatbatch (1974, p.30) and Melczer (1976), whereas Gerstner and Gerbstädt (1949), Tregear (1965), Pfister and Schulz (1966),and Scheuplein (1976a, p.32) are proponents of the low bulk mobility hypothesis.

Because there are "big names" on each side, the controversy is confusing and unhelpful to all those who work with the literature, especially of course the newcomer, though even Rothman (1954, p.12) admitted to perplexity. This subsection therefore attempts to show that certain aspects of the two competing hypotheses may be taken and built into a combined hypothesis which still adequately interprets the common pool of experimental observations. This procedure resolves the controversy and also suggests mechanisms of short-time-constant conductance perturbations which will be investigated in more detail in succeeding subsections.

Let us then firstly examine the counter-e.m.f. hypothesis, which is slightly older. Early investigators observed that when a step-function of

voltage was applied to the skin, the resulting current flow very rapidly decreased from some initial high level towards a final low level. Correspondingly the potential drop across the skin very rapidly rose from an initial low level towards a final high level. The decrease in current was attributed by Gildemeister and his school (see e.g. Gildemeister, 1912, 1928) to some interface or interfaces in the tissue which were not perfectly faradaic (e.g. Scheider, 1976; Albery, 1975), i.e. they were partially blocking to charge transfer. These partially permeable interfaces were assumed to be membranes of the cells of the epidermis, which by compartmentalizing the tissue increasingly restricted the maximum flow of current through it after a time roughly equal to that necessary for a charge carrier to electrophoretically diffuse from the middle of the compartment to its boundary (cf. the Maxwell-Wagner-Trukhan theory described by Pethig, 1979, pps. 150 - 167). Such ideas were being widely discussed at the time of Gildemeister's papers, following the work of Nernst (simply reviewed in English by Lucas (1910) and Cole (1933b)). The work of Nernst included a discussion of how a potential difference would build up across a selectively permeable membrane subjected to an electric current, because of the ionic imbalance caused by the selective flow. This potential difference was called a counter-electromotive force because as it build up it reduced the applied voltage across the membrane and thus the current flow through the membrane. Similar phenomena were known to occur at non-ideal electrode/electrolyte interfaces and to produce the falling current associated with "electrode polarization". Basically then Gildemeister applied the theoretical work of Nernst and hypothesized that there were a number of selectively permeable membranes in skin which rapidly built up a series of counter e.m.f.s when a voltage was applied across it, thus reducing the voltage and hence the current flow, as was observed.

We could in fact write

$$I_{obs}(t) = \frac{A}{d}\left[V_{app} - V_{cemf}(t)\right] \sum_i n_i q_i \mu_i \qquad (13.6.d.1)$$

where $I_{obs}(t)$ is the observed current flow as a function of time through a skin region of area A and thickness d,

V_{app} is the voltage applied externally across the skin region,

$V_{cemf}(t)$ is the sum of the counter-e.m.f.s which build up as a function of time across the selectively permeable membranes in the skin region concerned,

n_i is the number per unit volume of the ith type of charge carrier which exists in the medium between these membranes and may be involved in carrying charge across them,

q_i is the charge on the ith type of charge carrier,

and μ_i is the diffusion (drift) mobility of the ith type of charge carrier.

The fact that the observed current decreases with time for a constant externally applied voltage can also be described by saying that the effective resistance of the skin increases with time, because

$$R_{eff}(t) = R_\infty \cdot \frac{V_{app}}{\left[V_{app} - V_{cemf}(t)\right]} \geq R_\infty = \frac{d}{A \sum_i n_i q_i \mu_i} \qquad (12.6.d.2)$$

Here R_∞ is the skin resistance at infinite frequency (corresponding to zero time), and $R_{eff}(t=\infty)$ is equal to R_o, the skin resistance to direct current (zero frequency or infinite time). It will be seen later however that $R_{eff}(t)$ is approximately equal to $R_{eff}(t=\infty)$ after only a few milliseconds, so that the buildup of the effective resistance is very fast indeed. (I do not like the term "apparent resistance" used by that English literature which is in favour of the counter-e.m.f. hypothesis

as a translation of the German terms "Scheinbar Widerstand" or "Scheinwiderstand". "Schein-" and "apparent" both give the impression of unreality, yet the resistance being discussed is real enough, so I have used the term "effective resistance".)

From (12.6.d.2) we therefore also have the relationship we met earlier as equation (10.1.d.1), namely

$$V_{cemf}(t = \infty) = V_{app}\left[1 - \frac{R_\infty}{R_o}\right] \qquad (12.6.d.3)$$

which might serve as an algebraic description in the terminology of this thesis of what authors such as Rein (1929) mean by "the polarization of skin".

The table of V_{cemf} against V_{app} given by Rein (1929, Table 2, p.52) shows however that $[1 - (R_\infty/R_o)]$ must itself be dependent upon V_{app}, presumably through R_o being dependent on V_{app}. Thus at least some of the resistances in skin must be non-linear, a fact we have already become familiar with (see e.g. Section 4.3).

Now the observation that when a step-function of voltage was applied to the skin, the current flowing through it very rapidly decreased from some initial high level towards a final low level, had meanwhile given to Einthoven and Bijtel (1923) the idea that skin could be modelled by the Lapicque circuit (Fig. 11.2.I), in which the same effect was produced by the charging up of the capacitor to a fraction of the applied voltage determined by the two resistors. Einthoven and Bijtel postulated in fact that the buildup of counter-e.m.f. across the skin was nothing more than the charging of the dielectric capacitance formed by the relatively dry epidermis sandwiched between the relatively wet dermis and contact electrolyte. A pure dielectric capacitance in the Lapique circuit would

however produce a pure exponential decay of current in response to a step-function of voltage, and Strohl and Iodlka (1924) soon showed that the decay was not a pure exponential function. This finding was confirmed by the much more detailed time-domain experiments of Hozawa (1928), and the unsuitability of a pure capacitance also follows from the frequency-domain studies of Gildemeister (1928; see also Section 11.2), who showed that the "capacitance" had in fact to have a phase-angle other than 90°. At the time, the only phenomenology known to provide such a (frequency-dependent) "capacitance" was that of electrode polarization. Hence a so-called "polarization capacitance" was used in place of the pure capacitance by Gildemeister (1928) and this was later generalized to a "polarization impedance", as has been discussed in Section 11.2. Very reasonably however Gildemeister (1928) and Rein (1929, pps. 50-52) pointed out that there would however be present in the tissue a pure capacitance representing the charging of Holmholtz double layers, and I assume that this should be in parallel with the "diffusion capacity" or "polarization capacity", latterly revised into a polarization impedance. All this of course is modelled by the familiar small-signal equivalent circuits of skin (Section 4.2), at least if the pure capacitance in parallel with the polarization impedance is negligible, as it would seem to be from the results reported in this thesis. The fact that the simple small-signal equivalent circuits of skin are indeed capable of reproducing exactly the non-exponential time-domain current decay described by Hozawa (1928) has at last been proved analytically by Poon and Choy (1978), and it should be remembered that we have not needed to invoke interfacial polarization processes in order to interpret these small-signal (linear) electrical properties of skin in Chapter 11. Thus really Gildemeister's advocacy of the exclusive relevance of Nernstein polarization phenomena and counter-e.m.f.s may well have been unfounded, since actually of course any

linear mechanism with a DRT, or any non-linear mechanism, will lead to a non-exponential response, and a DRT suitable for producing the right time-domain non-exponential response, and thus the right frequency-domain behaviour, may arise from an infinite variety of physical mechanisms.

Rein (1929, p.58) considered that the counter-e.m.f. arose primarily in the interface region between the corneum (which he mistakenly assumed to be very permeable) and the living cells of the epidermis (cf. Rothmann, 1954, p.12). This is of course the site of origin of the epidermal component of the skin potential level (see Section 12.3). Having demonstrated the existence of electro-osmosis through skin as we noted in the last subsection, Rein had the idea of attributing to electro-osmosis the origin of the inequality in diffusion mobility through the skin of ions of opposite polarities, this inequality being a necessary condition for the generation of a counter-e.m.f. across a selectively permeable membrane, as was shown by Nernst. Electro-osmosis leads to an inequality in mobilities because the resultant velocity of an ion through the skin "membrane" is the sum of the electro-phoretically-produced velocity of the ion and the electro-osmotically produced velocity of the fluid in which it is moving,

$$V_{res} = V_{ep} + V_{eos} \qquad (12.6.d.4)$$

but c.f. Abramson & Gorin, 1940a, and equation (12.6.c.1)

This sum will in general be different for ions of opposite polarities.

Nevertheless, although Rein's work did provide definite proof of the existence of electro-osmosis of skin, it could not establish the counter-e.m.f. hypothesis as obviously "the whole truth" in the face of the evidence provided by the proponents of the rival hypothesis, which we will now examine briefly.

The evidence in favour of the second hypothesis is very simple. It is, basically, that nearly all the distinctive electrical properties of skin disappear as the stratum corneum is stripped away or is otherwise rendered more permeable.

The main papers describing this evidence are those of Lewis and Zotterman (1926-27), Hill and Taylor (1937), Rosendal (1943, 1944, 1945), whose experimental work was the most extensive, Gerstner and Gerbstädt (1949), Pfister and Schulz (1966), and Yamamoto and Yamamoto (1976a). Most of this work is in English and the results of it need not be reviewed again collectively at this point because so much of it has been discussed already in earlier parts of this thesis.

These (and other) advocates of the "corneum hypothesis" have said that the site of origin of skin resistance (and presumably also of skin impedance) is in the corneum, or at least the relatively tightly-bound lower part of it known as the stratum corneum compactum (or stratum conjunctum, as used by Pfister and Schulz, 1966). This view would not in itself be irreconcilable with the counter-e.m.f. hypothesis since Gildemeister if not Rein was of the opinion that the membranes of the dead cells of the corneum could act in the required selectively-permeable way (Gildemeister, 1928, p.90, footnote). However, this compromise was never accepted by the advocates of the corneum as the main site of skin resistance. Instead they preferred the simpler concept that the resistance was due to a "mechanical" impediment to diffusion rather than an electrophoratic drag produced by the buildup of a counter-e.m.f.

By analogy with the system of equations used earlier we could write an algebraic description of this concept as follows:

$$I_{obs} = \frac{A}{d} V_{app} \sigma_{eff} = \frac{A}{d} V_{app} \sum_j n_j q_j \mu_j \qquad (12.6.d.5)$$

A low value of I_{obs} for a particular V_{app} is attributed to a low value of one or more of

n_j the number per unit volume of the jth type of charge carrier negotiating the skin by electrodiffusion

q_j the charge on the jth type of charge carrier

and μ_j the drift (diffusion) mobility of the jth type of charge carrier averaged over the bulk of the tissue.

The difference between this and the previous formalism is that the quantities with the subscript j are averaged values over the bulk of the tissue, whereas those we had before with subscript i referred only to the medium between the restricting membranes.

The concept of a mechanical impediment to diffusion soon led to the more sophisticated one that the motion of charge carriers through the skin was limited by temporary trapping at certain trapping sites assumed to be distributed approximately isotropically (e.g. randomly) throughout the bulk of the material. This idea helps us to clarify the issue over which the battle between the two hypotheses has been fought. *The issue is whether charge carriers diffusing through the skin under the influence of an electric field are temporarily held up mainly at sites distributed roughly isotropically throughout the material, or at sites distributed non-isotropically, such as interfaces.* In the earlier hypotheses the interfaces are membranes permeable in a selective way, and in the rival hypothesis the isotropically-distributed temporary traps are supposed to be something to do with the corneum (e.g. keratin side-groups). Because one hypothesis depends on the assumption that the sites are distributed (highly) non-isotropically, the other hypothesis assumes the opposite, and yet both assumptions are likely to be justified somewhere within the complicated anatomical and biochemical structure of skin, it is probably most reasonable to try to put the two hypotheses together,

leaving out only what must be left out if the hypothesis is to agree with the newly enlarged common pool of evidence.

Let us then begin the "combined hypothesis" with

Postulate (a): *Ions find it difficult to get through the corneum.*

This postulate is of course taken from the "corneum hypothesis". The evidence for it was reviewed in subsection 12.2.b, which demonstrated that those who have in the past thought that the entire corneum is highly permeable to ionic diffusion (as have most proponents of the counter-e.m.f. hypothesis), may now be assumed to have been misled (see e.g. Scheuplein, 1965, 1976a, 1976b). We also need

Postulate (b): *There is a fixed charge on the proteins of the stratum corneum*, which is an undisputed fact, employed by advocates of both hypotheses.

Accepting postulates (a) and (b) is however equivalent to accepting the corneum hypothesis, which implies (e.g. Teorell, 1953)

Consequence (a): *The corneum will indeed be at least partially selectively permeable with respect to ions*, and this in turn from simple membrane theory (e.g. Teorell, 1953) leads to

Consequence (b): *When a current is forced through the corneum, a counter-e.m.f. will be generated.*

These consequences follow even without the electro-osmotic action which Rein (1929) postulated to be involved in the generation of the counter e.m.f.

Supporters of the corneum hypothesis may object to consequence (b) on the grounds that Rosendal (1944, p.195) was unable to measure any significant decay of that potential difference which still existed across the skin 5 - 10 seconds after the cessation of current application. He assumed that the observed slowness of the decay meant that the corneum had not been previously charged up with a counter-e.m.f. to any significant extent and that the potential difference he had observed during the application of current had been entirely due to simple "ohmic" voltage drop.

This conclusion is however not justified. From Table 3 of Rein (1929) we may take an average capacitance of a square centimetre of skin to be about 0.01 μF, and it is easily established that a typical value for the resistance of such an area is about 100 kΩ. These values predict a time constant for electrical relaxation of skin of $\tau = RC = 1$ millisecond, agreeing well with the time Rein (1929, cf. Fig.19) shows is necessary to build up the counter-e.m.f., and within a non-significant factor of ten of the duration of the "initial charging spike" of Hozawa (1928), this factor being non-significant considering that Hozawa used electrodes of 3.8 cm^2 which would have reduced C, and that R is a rough average. Moreover a value of $\tau = 1$ ms corresponds to a "peak frequency" f_p of 160 Hz on the complex impedance locus, which is within the range I have observed for 1 cm^2 of skin (see Chapter 9).

Consequently taking this apparently reasonable value of $\tau = 1$ ms, we can see that whatever in fact was the value of the counter-e.m.f. contributing to the p.d. which Rosendal did measure during the application of current, at the cessation of current this counter-e.m.f. contribution would have decayed to less than 1% of its previous value after only 5 mS, and both it and its further decay would have been immeasurably small by the time that Rosendal made his measurements some 5,000 - 10,000 time-constants later.

Thus, it is submitted that the work reported by Rosendal (1944) is not sufficient to prove that counter-e.m.f.s do not arise in skin subjected to an imposed flow of current.

Having now dealt with those aspects of the corneum hypothesis which still seem acceptable in the light of the evidence published on both sides of the controversy, the same treatment can now easily be given to the counter-e.m.f. hypothesis.

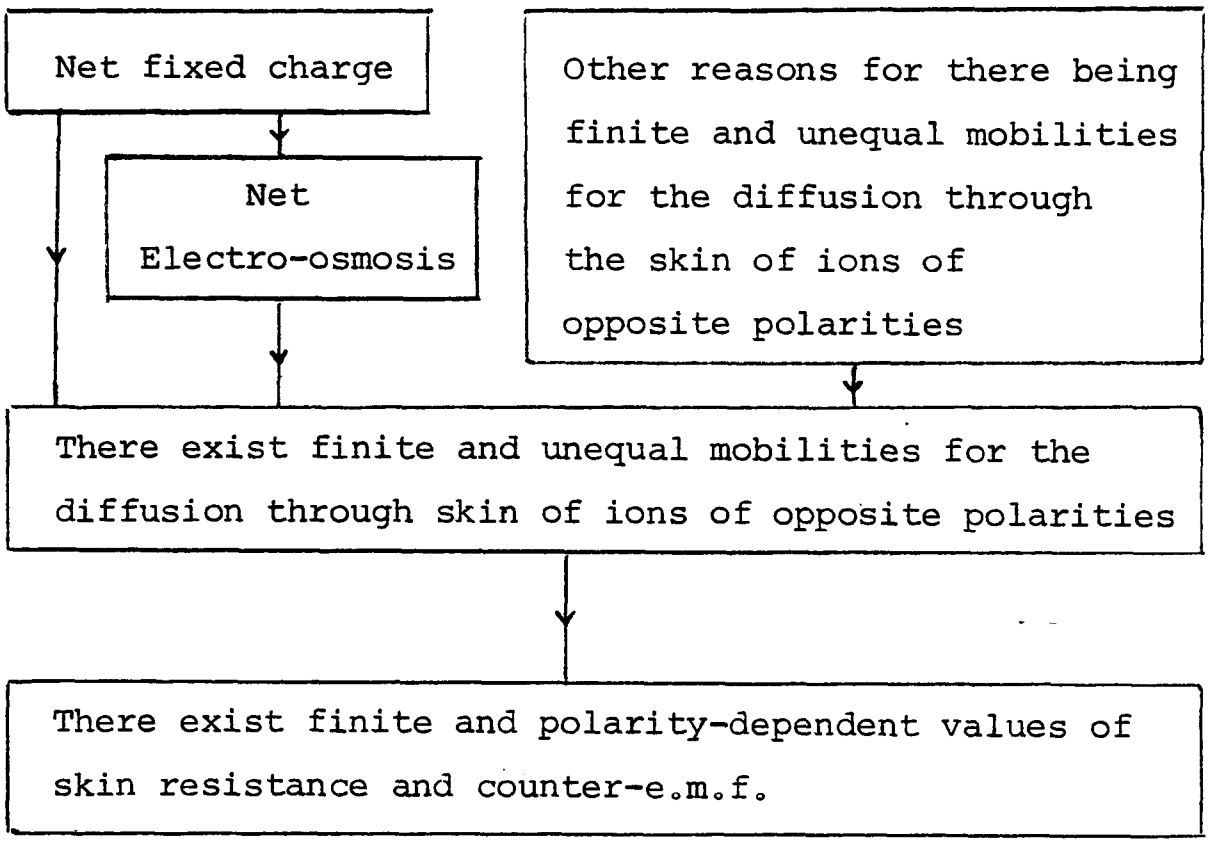
Net fixed charge
Net
Electro-osmosis
Other reasons for there being finite and unequal mobilities for the diffusion through the skin of ions of opposite polarities
There exist finite and unequal mobilities for the diffusion through skin of ions of opposite polarities
There exist finite and polarity-dependent values of skin resistance and counter-e.m.f.

Fig. 12.6.d.I

The existence of fixed charge on the proteins of the corneum - postulate (a) - together with the physically necessary

Postulate (c): *The corneum is not totally impermeable to ions*

leads to

Consequence (c): *Electro-osmosis will occur through whatever suitably-sized pores there are in the corneum.*

Such pores may be of various sizes from the very small (as Rein assumed for those in his hypothetical barrier stratum) up to the size of appendageal ducts, since even these are still not too big (see subsection 12.6.g).

This then completes the combined hypothesis which attempts to resolve the controversy between the two less versatile previous ones. The way in which the new hypothesis combines the two others is outlined schematically in Fig. 12.6.d.I.

Finally, to return to the short-time-constant conductance perturbations (STCCPs) which are the subject of this Section, the combined hypothesis suggests that they may arise in at least the following ways:

(1) From a polarity-dependent perturbation of the (series) interfacial resistance which has to be surmounted by a charge carrier entering the corneum.

(2) From a polarity dependence in the resistance of the bulk of the corneum.

(3) From a polarity dependent perturbation of the degree of shunting of the corneum resistance by the parallel conductance afforded by pores through the skin.

Let us begin by considering type (1) theories. If the interfacial resistance is only an "apparent resistance" caused by a counter-e.m.f. of some polarity-dependent magnitude arising at the corneum surface, then type (1) theories are unreasonable. This is because we know from the discussion above that any counter-e.m.f. would build up across skin in a

matter of milliseconds, whereas from subsections 12.6.a and 12.6.b we know that the time constant of an STCCP is of the order of tens of seconds.

The possibility of the interfacial resistance being a"true" resistance is examined in the next subsection.

12.6.e Electrolyte/semiconductor interfaces

The boundary between the contact electrolyte and the surface of the stratum corneum is an electrolyte / semiconductor interface because the corneum is a semiconductor (subsection 9.2.c). At such an interface, so-called "surface states" develop within the semiconductor (Many et al., 1965, Gerischer, 1970; Kleitz et al., 1976) which produce the equivalent of a Schottky barrier (e.g. Wright, 1979). This causes the interfacial region to conduct charge carriers of a particular polarity more readily in one direction than in the reverse direction, and the interface acts as a partial rectifier rather like a leaky pn junction diode.

Consequently we can expect the surface of the corneum to exhibit a different electrical resistance under conditions of anodic conduction to the resistance it shows under conditions of cathodic conduction. It is therefore necessary to estimate the relevance of this effect in order to ascertain whether conduction-polarity-dependent electrical responses of skin, such as STCCPs, result from this type of modulation of series resistance, or from some modulation of parallel conductance.

Now the skin-stripping experiments of Yamamoto and Yamamoto (1976a) and the work of other investigators (see Section 4.2 and subsection 11.4.a) showed that the bulk properties of the corneum can be described by a resistance R_1 in series with a parallel combination of a resistance R_2 and a polarization impedance. To this circuit representing the bulk of the corneum let us then add a diode to represent the effect of partial rectification at its surface. Any associated surface capacitance must however be negligible because the combination of a series resistance in parallel with a combination of a resistance and a polarization impedance fully reproduces the observed distribution of relaxation times. We therefore have Fig. 12.6.e.I as an equivalent circuit of the corneum.

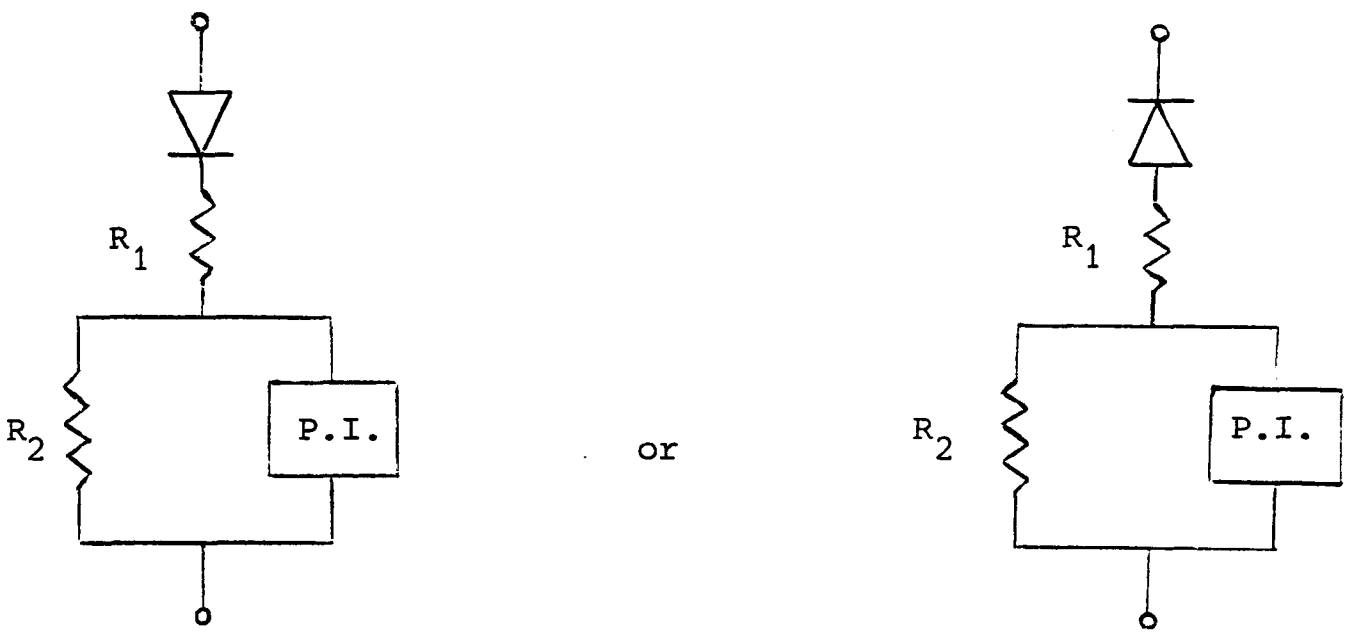

Fig. 12.6.e.I

To represent the appendageal shunts we add to the corneum equivalent circuit a parallel circuit branch consisting of a resistance R_3 (representing the appendageal ducts) in series with a parallel combination of a resistor R_4 and a capacitor C_m (representing the appendageal duct wall membrane). This then produces a crude equivalent circuit for whole skin, Fig. 12.6.e.II.

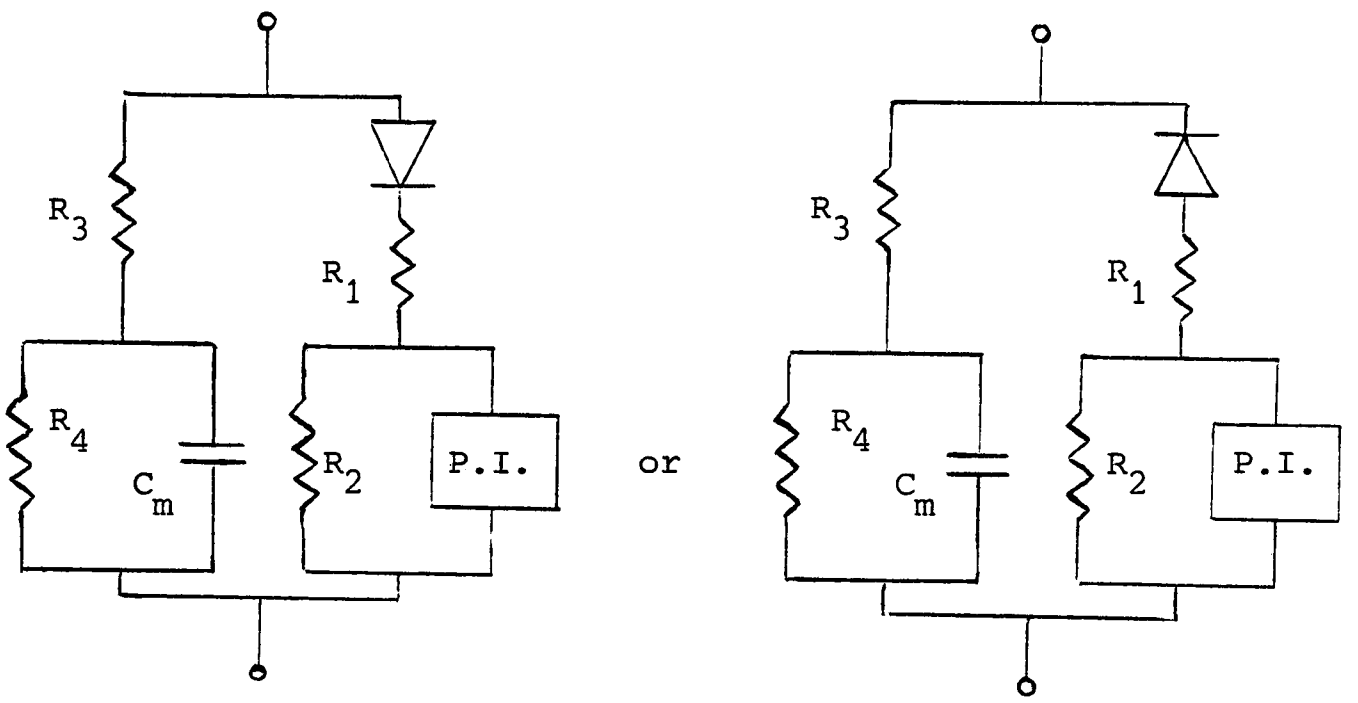

Fig. 12.6.e.II

At very high frequencies these are equivalent to

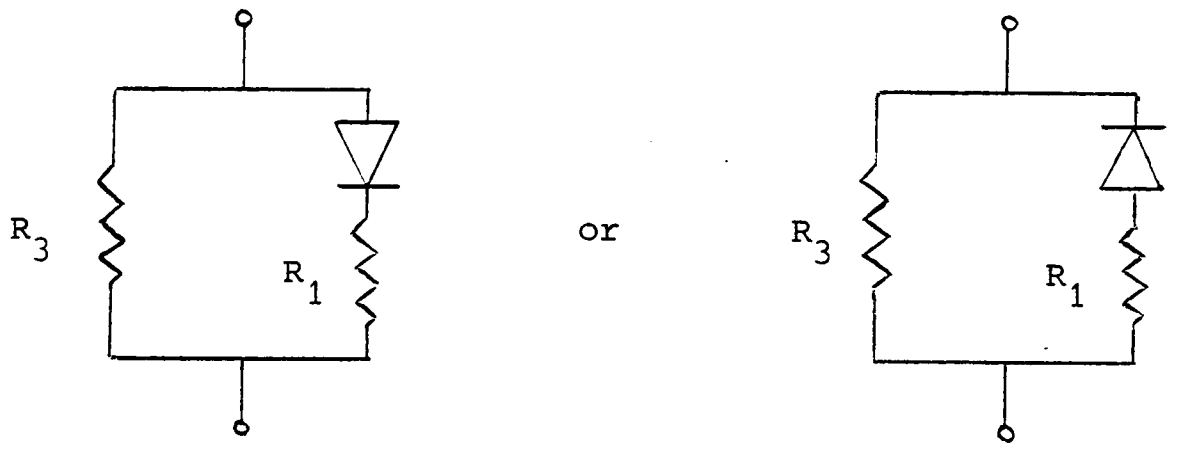

Fig. 12.6.e.III

Hence the VHF impedance of the skin reduces to just an equivalent series resistance R_∞, which must represent the average of the equivalent series resistances of the circuits shown in Fig. 12.6.e.III. Because R_1 is very much smaller than R_3 (indeed appendageal ductal conductivity is usually the main factor limiting skin conductivity, cf. Edelberg, 1971, p.519), this average would be expected to be approximately equal to $\frac{1}{2}R_3$ if the diode effect is significant, and to $\frac{1}{2}R_1$ if it is not. Experimentally, R_∞ is found to be very small indeed (see Section 8.3 and Chapter 9), which argues in favour of the view that resistance effects at the surface of the corneum are insignificant.

Consequently type (1) theories of STCCPs based on polarity-dependent perturbations of corneum surface resistance are not likely to represent the true mechanism. Let us therefore move on to consider theories of types (2) and (3).

12.6.f The work of Rosendal

At this point it will be helpful to introduce some more experimental observations. In 1944 Rosendal published a paper reporting investigations of the phenomena underlying what are here being called STCCPs. His results showed the following:

(A) STCCPs have a time constant of the order of tens of seconds (see subsection 12.6.b).

(B) STCCPs were progressively reduced in amplitude as the stratum corneum was progressively stipped off (Fig. 5, p.143).

(C) As the external electrolyte concentration was increased (especially that of the anions, under the conditions used by Rosendal), the skin resistance decreased, although more for cathodic than for anodic conduction, thus increasing the amplitude of STCCPs.

(D) The amplitude of STCCPs also depended on the molecular weight thus presumably the physical size of the ions in the external electrolyte. (Under the conditions used by Rosendal, this was especially true of the anions.)

Now let us return to considering alternative theories of the mechanism involved.

12.6.g Some hypotheses concerning the mechanism of STCCPs

Having discarded type (1) theories, we next consider type (2) theories based on the idea of a polarity-dependence in the resistance of the bulk of the corneum, i.e. a corneum having properties throughout its bulk such that it is easier for charges of one polarity to diffuse through it than it is for charges of the opposite polarity.

Rosendal's findings (B), (C) and (D) all provide evidence in favour of this view, and indeed it was the interpretation which Rosendal himself adopted. Nevertheless, finding (A) which Rosendal did not explicitly quote or discuss, is strong evidence against it in the light of what is now known about time-constants for the corneum concentration re-equilibration of substances whose diffusion constant is low (such as ions - subsection 12.2.b). These time constants are of the order of minutes or even tens of minutes (identifying the lag-time estimates of Scheuplein, 1967, Fig.2, with the time constants of subsection 12.2.f). Indeed Abramson and Gorin (1940a, p.273, 274) showed that up to the first five minutes of iontophoresis, the only significant penetration of ions is into sweat gland ducts and a few hair follicles. Thus since the lag-times for these appendageal routes ARE of the same order of magnitude as the time constants of STCCPs (Scheuplein, 1967, Fig.2, 1978, pps. 1732, 1733), we should place type (2) theories to one side and not return to them unless type (3) theories (highlighting the role of appendages) turn out to be even less promising.

Type (3) theories are based on the idea that STCCPs arise from a polarity-dependent perturbation of the degree of shunting of the corneum resistance by the parallel conductance afforded by pores through the skin. Since however there is no firm evidence for pores through normal skin other than those associated with the appendages, it will be assumed in the following that most if not all "pores" are in fact appendages.

The first type (3) theory we shall consider hypothesizes that the rate-limiting process predominantly determining the conductance level of skin is that of ionic conduction through at least partially permselective appendageal duct wall membranes at the bottom of appendageal ducts. The requirement that ions must diffuse down through the duct and then cross an at least partially permselective membrane easily explains Rosendal's findings (A), (C) and (D) in the light of that work of Abramson and Gorin and of Scheuplein which was mentioned above. Finding (B) however cannot be explained, except perhaps as being due to the initiation of an inflammatory response to the stripping procedure which includes a depolarization of the appendageal membrane. Moreover, the present hypothesis does not account for Rein's finding a pH-dependence in the sense of the STCCP polarity-dependence (Rein 1926b, pps. 222, 223 and Figs. 6 and 7. See also subsection 12.6.b.) This finding together with the stripping results shows that the corneum must be intimately involved in the mechanism of the STCCP.

Let us then consider in more detail STCCP phenomena as a function of pH. The pertinent observations of Rein can be reduced to the two self-explanatory diagrams Figs. 12.6.g.I and 12.6.g.II.

Figures 12.6.g.I and 12.6.g.II show that an observed short-time-constant increase of skin resistance with time is not consistently associated with the movement of charges of any particular polarity in any particular direction. It is however consistently associated with circumstances which cause the electro-osmotic flow in pores to be towards the surface of the skin. A similar statement can be made about observed short-time-constant decreases of skin resistance with time - these are consistently associated with electric-osmotic flow towards the inner layers of the skin.

Thus because STCCPs seem to be very closely correlated with electro-osmotic phenomena, let us now examine hypotheses which assume that an electro-

Fig. 12.6.g.I

ACIDIC CONTACT SOLUTIONS

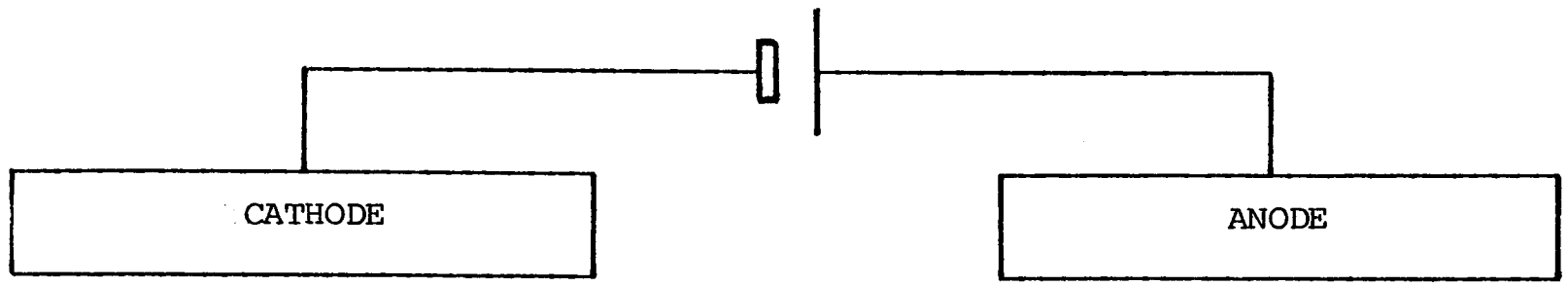

CORNEUM = THICK MEMBRANE WITH FIXED POSITIVE CHARGE

- ives move this way ↓	+ ives move this way ↑	Electro-osmotic flow in pores ↓		- ives move this way ↑	+ ives move this way ↓	Electro-osmotic flow in pores ↑
Resistance of the skin site under cathodic conduction decreases with time				Resistance of the skin site under anodic conduction increases with time		

Fig. 12.6.g.II

ALKALINE CONTACT SOLUTIONS

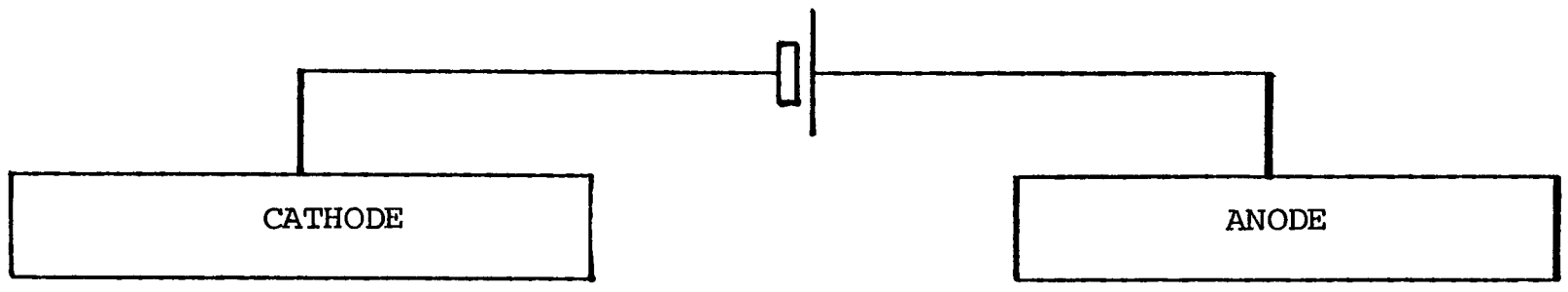

CORNEUM = THICK MEMBRANE WITH FIXED NEGATIVE CHARGE

Resistance of the skin site under cathodic conduction increases with time	Resistance of the skin site under anodic conduction decreases with time
- ives move this way ↓	- ives move this way ↑
+ ives move this way ↑	+ ives move this way ↓
Electro-osmotic flow in pores ↑	Electro-osmotic flow in pores ↓



Fig. 12.6.g.III

osmotic mechanism is involved in the STCCP. As was noted earlier, (subsection 12.6.d and equation 12.6.d.4), Rein (1929) suggested that ionic mobilities are modified by the occurrence of electro-osmosis in a way depending on the polarity of the ions concerned, and the polarity of conduction being employed. For example, for skin in contact with acidic solutions, the movement of positive ions into the skin under the anode will be hindered by the electro-osmotic counterflow, and thus the skin resistance to anodic conduction will be greater than that to cathodic conduction, as of course was found experimentally by Rosendal (1943, 1944). This hypothesis is then another example of a type (3) theory - one based on an electro-osmotically induced difference in ionic mobilities for diffusion through the skin through pores.

Let us firstly consider some evidence in favour of the hypothesis. The time-constant for the buildup of electro-osmotic flow in pores is hard to estimate, but it may be expected to be no longer than the lag-time for diffusion through an appendageal duct, which is of the order of ten seconds (Scheuplein, 1967, Fig.2). Thus Rosendal's finding (A) may perhaps be accommodated by this hypothesis, and there is less doubt concerning the other findings of Rosendal. If we assume that the electro-osmosis depends upon the presence of the (amphoteric, fixed-charge) cornified cells found in the upper reaches of the appendageal ducts, (see Fig.12.6.g.III from Pillsbury and Heaton, 1980; see also Hashimoto, 1978, pps. 1567, 1568; Scheuplein, 1967, p.81; Spearman, 1977, Fig.1 and Fig.5; Kligman and Christophers, 1963, pps. 704, 705), then stripping off the corneum will strip off most if not all of these as well and Rosendal's finding (B) can be understood. Findings (C) and (D) are also reasonable, on the basis that ions derived from the external electrolyte are assumed to diffuse (with particular mobilities) in appendageal ducts of restricted dimensions.

However, the present hypothetical form of the type (3) theory was assumed by Rein (1929) (though to apply to some sub-corneum epidermal permselective membrane, not the corneum itesl f), and evidence against it comes from the work of Abramson and Gorin (1940a, 1940b), who as we saw in subsection 12.6.c showed that Rein's hypothesis was inadequate.

But there is one more observation which is relevant to type (3) theories and which suggests the final type (3) hypothesis we shall examine here. It is this. Rein (1929, pps. 63, 64) and Keller (1963, p.78) reported that they observed electrically-induced swelling or shrinkage of "skin spots usually associated with hair follicles", in experimental circumstances which according to Figures 12.6.g.I and 12.6.g.II would imply that swelling of hair follicle ducts is always associated with a decrease in skin resistance with time, and that shrinkage is always associated with an increase. These associations are readily understandable, and suggest the hypothesis that short-time-constant skin conductance perturbations depend upon the alteration of appendageal duct widths due to electro-osmotic filling or emptying of the ducts. Because the appendageal ducts are bounded by the appendageal duct walls, electro-osmotic flow tends to fill or empty the duct rather than merely transport fluid across the skin as Rein believed.

As to evidence in favour, Edelberg (1968, p.255; 1971, p.519) and Fowles (1974, pps. 240-253) have stressed the importance of appendageal duct filling in determining the conductance of the skin, and the present hypothesis is of course also advocated by the experimental observations of Rein (1924, 1929) and Keller (1963, p.78) which indirectly led to it. The time-constant for the filling or emptying process may reasonably be expected to be of the order of tens of seconds depending on the applied voltage, the value required by Rosendal's finding (A). The other findings of Rosendal (subsection 12.6.f) can be interpreted according to the present hypothesis

in the same way as they were interpreted according to Rein's simplistic electro-osmotic hypothesis above, and moreover the present hypothesis may easily be reconciled with the results of Abramson and Gorin (1940a, 1940b). Objection may be made that appendageal ducts are too large to be involved in electro-osmotic phenomena, but Simons et al. (1980) recently reported large electro-osmotic water flows through the tracheid and resin ducts of the wood of the Scots Pine, these ducts being approximately 10 μm and at least 25 μm in diameter respectively (cf. the 70 μm nominal average diameter of appendageal duct openings, reducing very rapidly on entering the duct itself: Scheuplein, 1967, Table 1). It should also be noted that Rein found that the electro-osmotic activity of skin decreased with time after its removal from the body (1924, p.132) and that the electro-osmotic activity of atrophic or scarred skin was always much less than that of normal skin (1929, p.61), since these findings may also be taken as evidence in favour of hypotheses involving electro-osmosis occurring via appendages, although Rein himself did not hold this view (Keller and Rein, 1928, p.70).

Finally, we shall see in the next Section (12.7) that the electro-osmotic duct filling hypothesis is in good agreement with the phenomena associated with electrical breakdown of the skin.

Thus, in conclusion, having examined a large number of alternative possibilities concerning the mechanism of short-time-constant conductance perturbations, it seems on the basis of the available evidence that the most likely hypothesis is as follows: *The conductance of the skin is dependent upon the polarity of conduction because there is a conduction-polarity-dependent fluid flow in the appendageal ducts due to electro-osmosis. Because the ducts are bounded by a wall with a limited permeability, the polarity-dependent electro-osmotic fluid flow tends to fill them or empty them, and this alters the cross-sectional area of the pore and thus its*

electrical resistance. Because the appendages act as electrical shunts, an alteration in their resistance alters the resistance of the whole skin site, and this is the origin of the short (tens of seconds) time-constant conductance perturbations which can be induced in skin by switching conduction from one polarity to the other.

12.6.h An equivalent circuit to model STCCPs

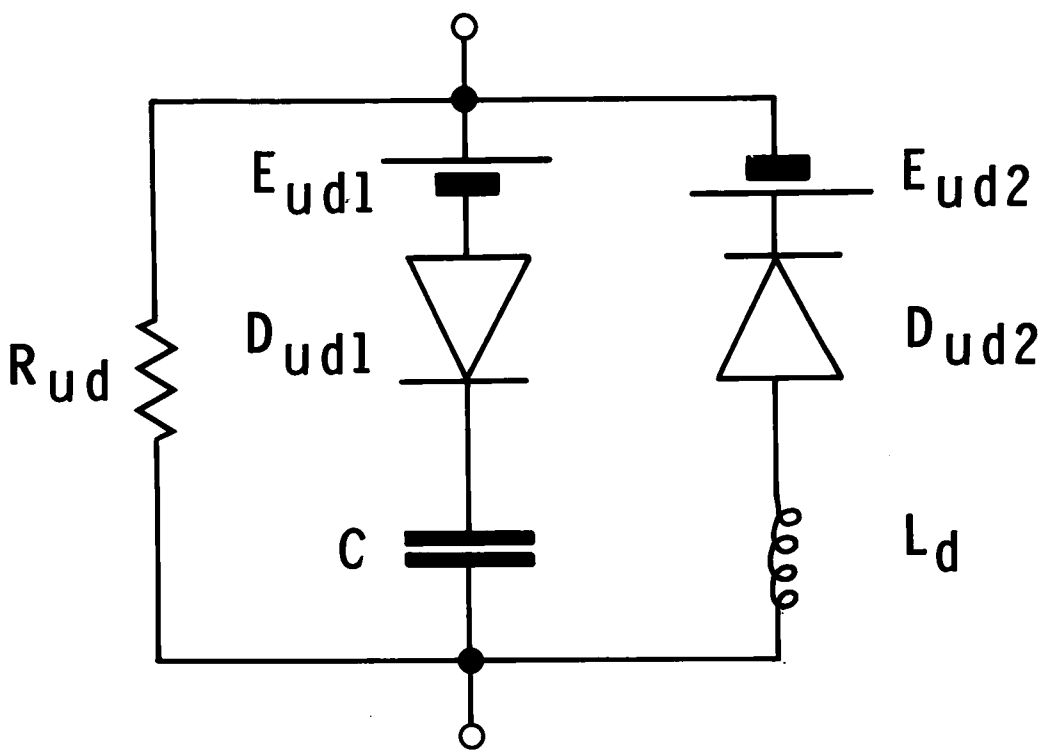

Fig. 12.6.h.I

To model the hypothetical electro-osmotic duct filling mechanism of time-dependent non-linearity with which we concluded the last subsection, we can replace the simple ductal resistance R_d of Fig. 12.5.g.I by a resistor R_{ld} in series with the equivalent circuit of Fig. 12.6.h.I. The resistor R_{ld} represents the resistance of that lower part of the duct which may be assumed to be unaffected by electro-osmosis, and the equivalent circuit represents the upper part of the duct which is. Let us examine the properties of this equivalent circuit as a function of the voltage V between its terminals.

Firstly, consider the case of positive V of magnitude smaller than that of E_{udl} or E_{ud2}. The e.m.f. E_{ud2} reverse biases the diode D_{ud2}, and V will serve only to increase this reverse bias and so further raise the already very

high resistance of the diode, which we may call R_{ud2}. R_{ud2} is also of course the resistance of the branch of the circuit including L_d. The branch of the circuit including the capacitor C will also have a very high resistance, indeed an infinite resistance, since the resistance of C is infinite. Consequently the resistance of the equivalent circuit as a whole, R, will be approximately equal to R_{ud}.

In the case of negative V of magnitude smaller than that of E_{udl} or E_{ud2}, V is insufficient to forward bias D_{ud2} against the action of E_{ud2}, and so the resistance of this branch of the circuit, R_{ud2}, remains high. The resistance of the branch of the circuit including C is again of course infinite and so the resistance of the whole equivalent circuit, R, is again approximately equal to R_{ud}.

In the case of V alternately positive and negative, with the magnitude of V still smaller than that of E_{udl} or E_{udl}, the response of the circuit does not change. At times of polarity changeover the capacitance C will acquire a finite resistance, indeed for an infinitely rapid changeover a zero resistance, but the fact that D_{udl} will then be affected by V is of little significance. Either V is insufficient to forward bias D_{udl} against the action of E_{udl} when V is positive for times shortly following a changeover, or V increases the reverse bias of D_{udl} already being applied by E_{udl} when V is negative for times shortly following a changeover.

Thus we may conclude that for small V of either polarity, conduction through the circuit will be ohmic, with its resistance being independent of sudden reversals of V, and of small changes in the magnitude of V.

Now consider the case of positive V large enough for the magnitude of V to exceed that of E_{udl} and E_{ud2}, (which are assumed to be equal). Under equilibrium conditions, we find that V increases the reverse bias of D_{ud2},

and so the resistance of the circuit branch containing L_d is very large indeed. The resistance of the circuit branch containing C is infinite because of the infinite resistance of C. Thus the resistance of the equivalent circuit is approximately equal to R_{ud}, and we may write

$$R(+ \text{ equilibrium}) = R_{ud} \qquad (12.6.h.1)$$

However, for times shortly following a step-function change in V, the impedance of C will temporarily be very small, and V will forward bias D_{udl}, even against the action of E_{udl}, such that the resistance of this branch of the circuit will be R_{udl}, where R_{udl} is rather small. Simultaneously, the impedance of L_d will temporarily be very large, but as this effect diminishes the resistance of this branch of the circuit will still be very large for the reasons we have seen above. Consequently the resistance of the whole equivalent circuit will be approximately equal to

$$R \text{ (+ after step)} \simeq \frac{R_{ud} \cdot R_{udl}}{R_{ud}+R_{udl}} < R_{ud} \qquad (12.6.h.2)$$

Finally, consider the case of negative V large enough for the magnitude of V to exceed that of E_{udl} or E_{ud2}. Under equilibrium conditions we find that V forward biases D_{ud2}, even against the action of E_{ud2}, such that the resistance of this branch of the circuit will be R_{ud2}, where R_{ud2} is rather small. The resistance of the eircuit branch containing C is infinite because of the infinite resistance of C. Thus the resistance of the whole equivalent circuit is approximately equal to

$$R \text{ (- equilibrium)} \simeq \frac{R_{ud} \cdot R_{ud2}}{R_{ud}+R_{ud2}} < R_{ud} \qquad (12.6.h.3)$$

However, for times shortly following a step-function change in V, the impedance of L_d will temporarily be very large, and so the resistance of this branch of the circuit will also be very large. Simultaneously, the impedance of C will temporarily be very small, but since V acts in such a way as to increase the reverse bias of D_{udl} this transient effect is unimportant since the resistance of the circuit branch containing C remains very high. Thus the resistance of the equivalent circuit is approximately

$$R \text{ (- after step)} = R_{ud} \qquad (12.6.h.4)$$

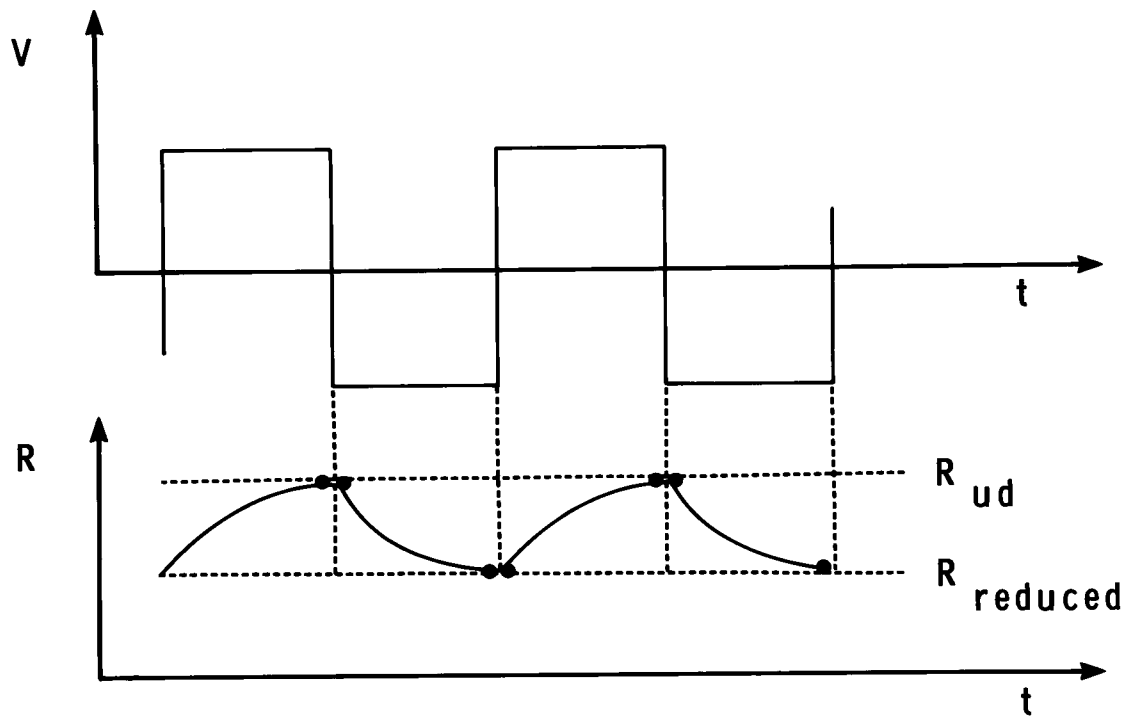

Fig. 12.6.h.II

We are now in a position to see that a wavetrain of V alternately positive and negative such as Rein (1926b) and Rosendal (1943) employed (see subsection 12.6.b) will be associated with a corresponding wavetrain of resistance (Fig. 12.6.h.II). The black dots shown in the Figure are intended to be successive values of R obtained from the sequence (12.6.h.1),(12.6.h.4), (12.6.h.3) and (12.6.h.2). The time-dependent resistance of the circuit can

be seen to relax in a pseudo-exponential way between two limits R_{ud} and

$$R_{reduced} = \frac{R_{ud} \cdot R_{udx}}{R_{ud}+R_{udx}} \qquad (12.6.h.5)$$

where the x subscript indicates the assumption that when (12.6.h.2) or (12.6.h.3) are applicable

$$R_{udl} = R_{ud2} = R_{udx} \qquad (12.6.h.6)$$

Note particularly that the decay from R_{ud} to $R_{reduced}$ may be described approximately in terms of a time constant

$$\tau_{decay} = L_d/R_{udx} \qquad (12.6.h.7)$$

and the rise from $R_{reduced}$ to R_{ud} may be described approximately in terms of

$$\tau_{rise} = C.\ R_{udx} \qquad (12.6.h.8)$$

where these two time constants need not be of equal magnitude, and will both be dependent upon the magnitude of V. The first property is very clearly seen in the results of Rein (1926b, Fig.6) and of Rosendal (1943, Fig.6). The second property has not so far as I know been tested experimentally, but seems intuitively reasonable. The same applies to the fact that the amplitude of the resistance swings produced by the model increase as the magnitude of V increases, since

$$\Delta R = R_{ud} - R_{reduced} = R_{ud}\left[1 - \frac{R_{udx}}{R_{ud}+R_{udx}}\right] \qquad (12.6.h.9)$$

which increases as the magnitude of V increases, because R_{udx} decreases as the magnitude of V increases.

In summary then, the present equivalent circuit for STCCPs is able to model the fact that STCCPs only begin when moderately high voltages are

applied across the skin, and that when they do begin they involve a resistance response to repeated reversals of applied voltage polarity which is of the form shown in Fig. 12.6.h.II. When such a response is superimposed upon a slow decrease in resistance with time caused by the factors reviewed in Section 12.2, the form of the clinical observations made by Rein (1926, Figs. 4 - 7) and by Rosendal (1943, Fig.4; 1944, Figs. 2 - 5) is modelled very closely indeed.

12.7 Electrical breakdown of the skin

12.7.a Introduction

Breakdown of the usual electrical properties of skin can occur in various ways. Some properties of course depend upon the maintenance of cellular metabolism and so will tend to fade with time during in vitro experiments. Still more properties will disappear or alter if autolysis is allowed to proceed. (For example the D.C. resistance R_o will diminish with time.)

This Section however is intended to review the phenomena associated with breakdown when that breakdown is caused by excessively strong current densities being passed through the skin. Such currents lead to what might be termed an electrically-produced biological lysis of the tissue, besides the "electro-lysis" in the chemical sense which will occur as well.

The phenomenology of such a breakdown may be briefly described as follows. If the current density flowing through the skin exceeds a certain threshold value, then after a short latent period of a few seconds the conductance of that skin increases very abruptly and substantially, increasing still further with increase in the magnitude and/or the duration of application of the applied voltage. The requisite threshold value of current density depends upon the polarity of the probe electrode compared with the polarity of the fixed charge of the skin. The occurrence of breakdown is associated with a local inflammatory response of a severity depending on the current density employed. There may be just mild local reddening of the skin, or feelings of itching, burning or pain followed by local hyperaemia, or even (in more extreme cases) feelings of pain and burning followed by local hyperaemia and whealing. Very large current densities will of course simply destroy the tissue.

In order to avoid the occurrence of breakdown, low current densities should be employed. Rein, (1924, Table 5) published values of what were in his opinion "safe" current densities for various experimental conditions, and these values are reproduced in the adapted Table below divided by a factor of ten to accord more closely with my own experimental observations (unpublished work, 1975):

Table 12.7.a.A: Suggested current density limits if breakdown is to be avoided

Contact electrolyte pH	Probe electrolyte polarity	Current density (microamps/cm^2)
Alkaline	anodic	150 - 200
Neutral	"	180
Acid	"	5 - 10
Alkaline	cathodic	5 - 10
Neutral	"	40
Acid	"	100 - 150

12.7.b Some reports of breakdown

In 1882, Gärtner drew attention to the fact that the resistance of the skin could be greatly reduced by the passage of a current through it, the reduction in resistance depending upon the intensity and duration of the applied current density.

Little further attention seems to have been paid to this however until Ebbecke published a series of papers (1921, 1922, 1923) on the connection between local stimulation of the skin (by a variety of means) and its electrical conductance. Ebbecke found (1921) that upon mild mechanical, thermal or electrical stimulation of a particular skin area, the electrical conductance of that area was temporarily and (usually) reversibly increased. This he called the "local galvanic reaction" of the skin and showed that it was *not* neurally mediated like the 'psycho-galvanic response" or SCR described by the psychophysiologists. It was indeed "local". Moreover, the fact that it was (usually) reversible and (usually) short-lasting - a minute perhaps - meant that it (usually) involved no particularly gross injury. However, he continued his investigations by employing higher current densities (1922, 1923), ultimately using a needle-tip as a probe electrode to achieve very high current densities (1923), and by this means was able to observe more dramatically the phenomena associated with electrical breakdown of the skin. This is perhaps most clearly illustrated by the type of experiment he describes on page 202 of his 1923 paper. He applied a large indifferent electrode and a needle-tip probe electrode to the skin with a potential difference of 4 volts between them, and the needle tip as cathode. With this arrangement the current was at first 4 - 8 microamps, but after a few seconds it began to rise rapidly and within 15 seconds had reached 70 - 100 microamps, after which it stabilised. The rapid rise was associated with feelings of prickling, burning or pain at the site of the

needle-tip, followed by other sequelae of the inflammatory response, namely a localized hyperaemia and the formation of a wheal.

Lewis and Zotterman (1926-27) repeated these investigations and found the same results.

Rein also repeated some of Ebbecke's work (Rein, 1926a) but drew attention (1929, pps. 63, 64) to the fact that the effects produced depended upon the polarity of the electrode compared with the polarity of the fixed charge of the skin. For contact electrolytes producing a fixed positive charge, e.g. HCl (see subsection 12.2.e and Table 12.2.e.B), a breakdown under the anode would lead to pain, a moderate hyperaemia, and sunken, dried up spots associated with hair follicles (cf. Figs. 12.6.g.I and the appendageal electro-osmosis theory of subsection 12.6.g), whereas a breakdown under the cathode would lead to pain, a considerable hyperaemia, and dermal oedema and wheals mostly near hair follicles. Breakdown occurred at a lower current density for anodic conduction than for cathodic conduction (see Table 12.7.a.A). Conversely, for contact electrolytes which produce a fixed negative charge on the skin, one should read "anode" for "cathode" and vice versa, in the phenomenological description above.

In 1943, Rosendal reported observations of the electrically-produced breakdown of skin resistance in the first of three papers forming the most systematic investigation of the electrical properties of skin since the work of Rein (1926a, 1926b, 1926c, 1926d, 1929). Rosendal worked with skin which had a fixed positive charge, as we have seen (subsection 12.2.e), and so, as would be expected from the work of Rein, he found that breakdown occurred at a lower current density for anodic conduction than for cathodic conduction. Indeed, for cathodic conduction the threshold was so high that breakdown did not occur even at six times the voltage necessary to produce anodic breakdown (Fig.3, p.141). Anodic breakdown was however easy to produce, and pain and local hyperaemia were associated with it (p.141).

The work of Rosendal (1943) is also relevant to the interpretation of some observations of Rein (1926b). It was noted in subsection 12.6.b that Rein carried out experiments in which he switched the polarity of the probe electrode from anodic to cathodic or vice versa once per minute, and observed what have been called here STCCPs superimposed upon a long-time-constant conductance increase (Section 12.2). These observations were shown schematically in Fig. 12.6.b.I. Now, after a few seconds of this program of conduction switching, presumably when the long-time-constant conductance increase had increased the applied current density to some critical value, there was a spontaneous event which Rein describes in another experimental context in the following paper (1926c), and which has here been called a "breakdown". The event was associated with pain (1926b, pps.212, 223), and also a reversal of the conduction-polarity dependence of the STCCPs. For example, if a switch to anodic conduction had previously led to a short-time-constant increase of the resistance of the skin with time, then after breakdown it was found to lead to a short-time-constant decrease, and cathodic conduction to an increase, whereas before it had produced a decrease. Rein could offer no interpretation of this reversal phenomenon, and so was forced on pages 227 and 228 of his 1926b paper to promise that there would be one in a later publication. However, I have not been able to find it.

As was previously noted in subsection 12.6.b, Rosendal also investigated STCCPs, but under conditions in which the long-time-constant conductance increased had equilibrated. He too observed breakdown, though only during conduction of one polarity - presumably because he only investigated one sign of fixed charge in the skin. Yet following breakdown, Rosendal did not observe any reversal in the polarity-dependence of STCCPs, but just a reduction in their amplitude, i.e. there was a reduction in the (eventual) difference between resistance to anodic conduction and resistance to

cathodic conduction. Thus on the basis of the work of both Rein and Rosendal it is necessary to conclude as was done in subsection 12.6.b that breakdown will in general cause a diminuation, abolition, or partial or full reversal of, short-time-constant conductance perturbations.

12.7.c Some interpretations of breakdown

Ebbecke (1922, p.322) was of the opinion that an electrically-produced "local galvanic reaction" strong enough to produce electrical breakdown, involved "chemical products of electrolysis at the electrodes", in particular hydrogen ions and hydroxyl ions. These products of electrolysis, concentrated according to the area of the electrodes, were assumed to chemically attack the epidermal layer(s) responsible for the electrical resistance of the skin (Ebbecke assumed that the corneum was negligible in this respect) and this produced the breakdown in electrical resistance which he observed. He assumed that the relevant epidermal membrane was made so permeable that it no longer produced a polarization counter-e.m.f. or the associated ("apparent") resistance.

As we noted in the subsection above, Rein pointed out that the phenomena associated with breakdown depended upon the pH of the contact electrolyte, and assumed that this dependance arose via the pH-dependance of the fixed charge of the skin. He therefore slightly altered the emphasis in Ebbecke's interpretation to take account of this factor, and postulated that breakdown was a manifestation of an electric-field induced direct electrolysis of the epidermal layer responsible for the electrical resistance of the skin (Rein, 1926c). This will be more easily understood by reference to the schematic diagrams Figures 12.7.c.I and 12.7.c.II.

Figure 12.7.c.I illustrates the use of an acidic contact electrolyte, namely HCl. For this arrangement skin behaves as a thick membrane with fixed positive charge (Table 12.2.e.B), and Rein assumed that this would mean that negatively charged ions, in this case Cl^-, would enter the skin more readily than positively-charged ions, in this case H^+ (ignoring solvation). Consequently relatively more hydrogen ions would build up outside the skin under the anode than Cl^- ions under the cathode, and this would eventually

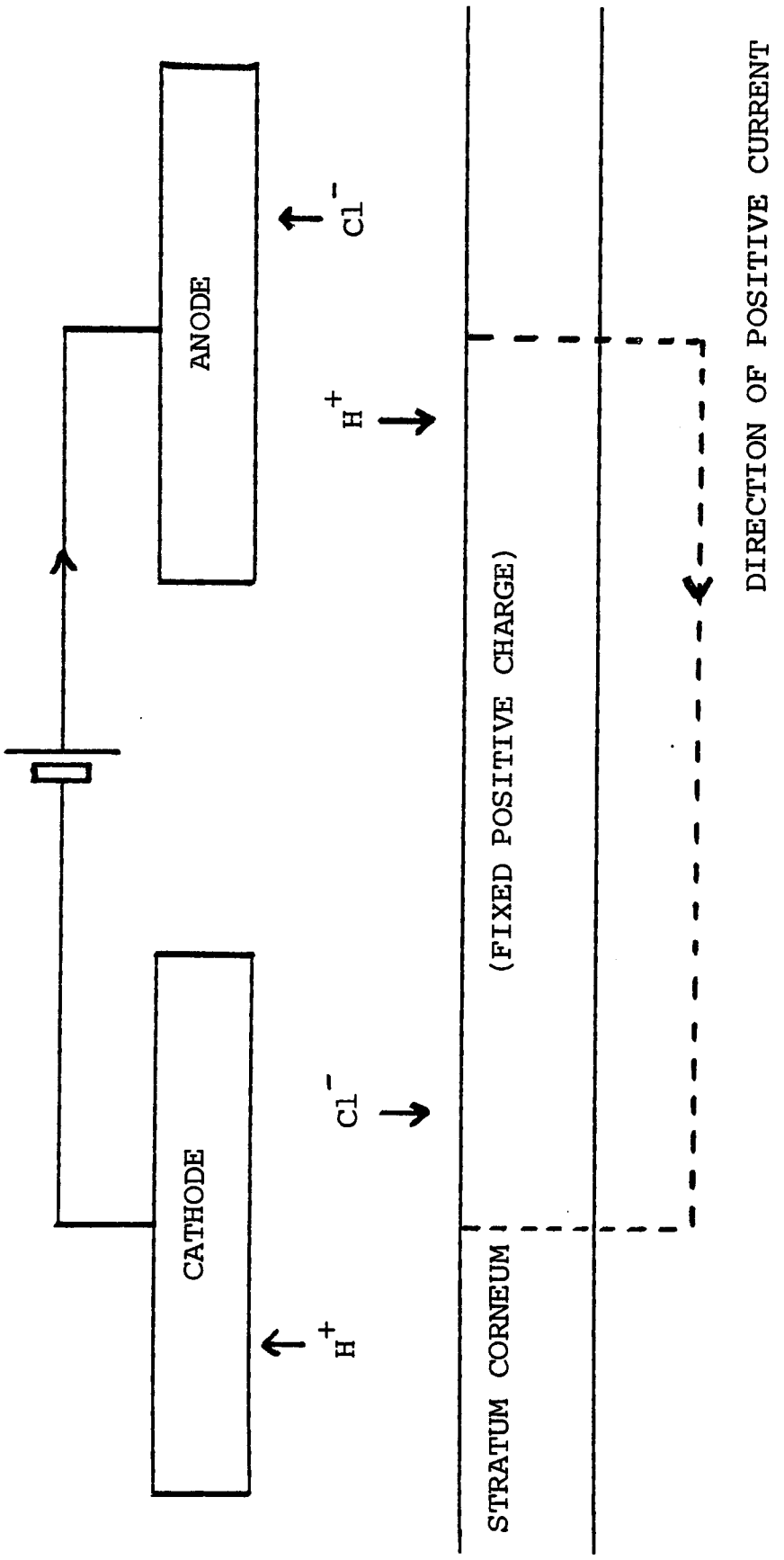
ACIDIC CONTACT SOLUTIONS, e.g. HCl
ANODE
CATHODE
H^+
Cl^-
Cl^-
H^+
STRATUM CORNEUM
(FIXED POSITIVE CHARGE)
DIRECTION OF POSITIVE CURRENT

Fig. 12.7.c.I

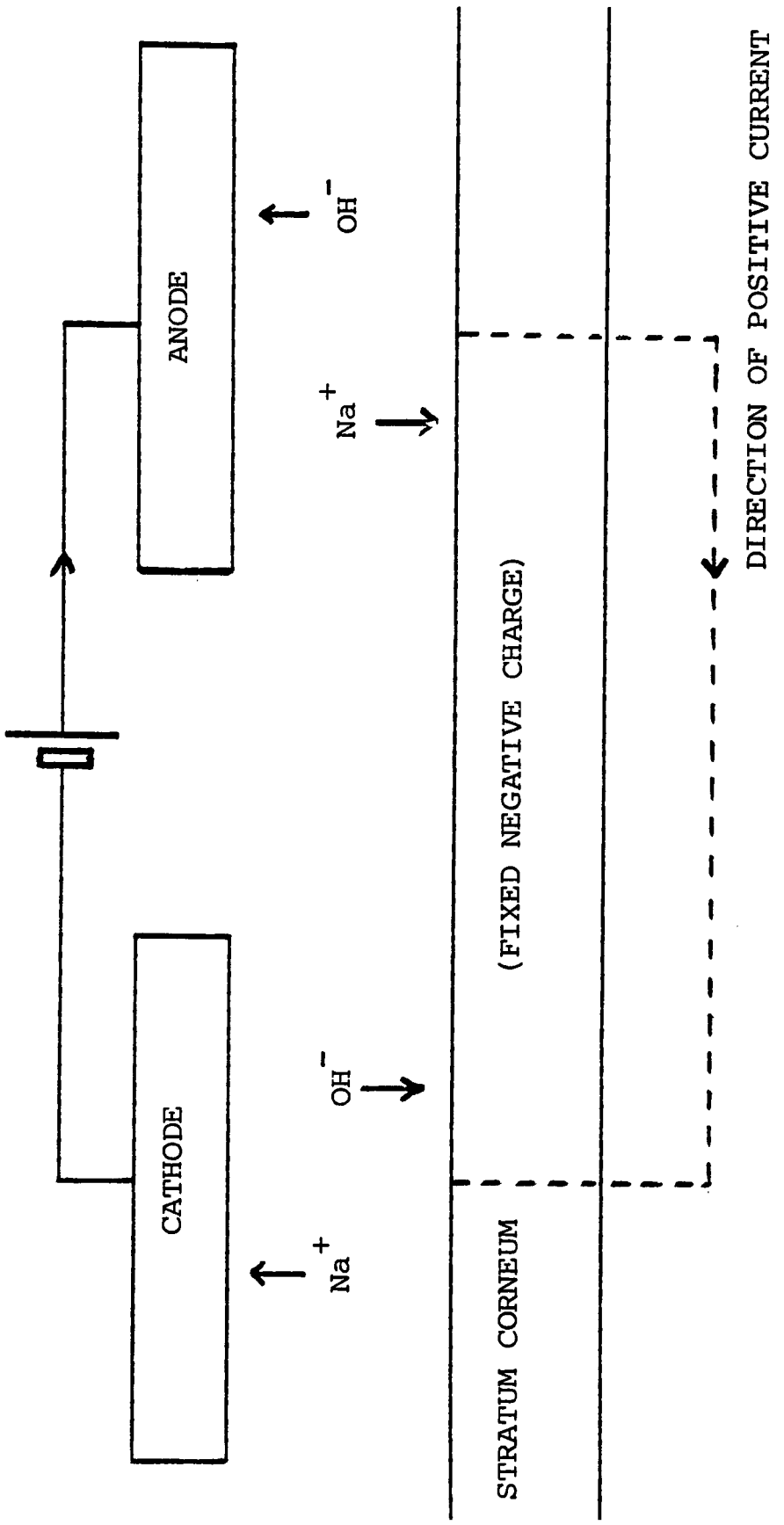
ALKALINE CONTACT SOLUTIONS, e.g. NaOH
ANODE
CATHODE
Na^+
OH^-
OH^-
Na^+
STRATUM CORNEUM
(FIXED NEGATIVE CHARGE)
DIRECTION OF POSITIVE CURRENT

Fig. 12.7.c.II

produce (besides the pH changes which Rein passed over), a large increase in the applied electric field under the anode and a small decrease in the field under the cathode.

Ultimately, pain is felt under the anode (Rein, 1926c, p.232), and there is a sudden large decrease in the skin resistance at this site.

Rein assumed that this resulted from the increased field under the anode reaching a critical value sufficient to cause electrolysis of the tissue, since at a rather higher current density, "breakdown" was observed to occur under the cathode too.

Figure 12.7.c.II illustrates the use of an alkaline contact electrolyte, namely NaOH. For this arrangement skin behaves as a thick membrane with fixed negative charge (Table 12.2.e.B), and Rein assumed that this would mean that positively charged ions, in this case Na^+, would enter the skin more readily than negatively-charged ions, in this case OH^- (ignoring solvation). Consequently relatively more hydroxyl ions would build up outside the skin under the cathode than Na^+ ions under the anode (Rein, 1926c, p.234),and this would eventually produce (beside the pH changes which Rein passed over), a large increase in the applied electric field under the cathode and a small decrease in the field under the anode.

Ultimately, pain is felt under the cathode (Rein, 1926b, p.232) and there is a sudden large decrease in the skin resistance at this site.

Rein assumed that this resulted from the increased field under the cathode reaching a critical value sufficient to cause electrolysis of the tissue, since at a rather higher current density, "breakdown" was observed to occur under the anode too.

As was noted in the last subsection, the work of Ebbecke was also repeated by Lewis and Zotterman (1926-27), and they obtained the same results. However, they did not agree with Ebbecke's interpretation of these

results, since during experiments using a needle-tip as probe electrode they claimed to have observed bubbles of gas forming both on the needle tip and within the corneum itself. From this they inferred that the corneum was being electrolytically disrupted by the applied current (1926-27, p.282), as in Rein's concept of the disruption of some layer other than the corneum. Indeed they demonstrated that mechanically opening up holes through the corneum was sufficient to reproduce the breakdown of electrical resistance observed by Ebbecke, and further substantiated their interpretation by various experiments which showed that the electrical resistance of the skin mainly depended upon the integrity of the corneum, and not upon that of any other epidermal layer. This emphasis upon the corneum however directly challenged the view then prevailing in the German and French literature (see subsection 12.6.d) and Rein (1929, p.81) was induced to accuse Lewis of (unspecified) methodological errors, and of being ignorant of the Continental evidence, both of which accusations were no doubt unwarranted.

However, after ten years most of this dust had settled, and in 1937 Hill and Taylor ventured to publish an extension of the work of Lewis and Zotterman. They showed that the corneum was indeed being disrupted by the applied current, but that the disruption was due to chemical products of electrolysis at the electrodes, not electrolysis within the tissue. This was an experimental vindication of part of Lewis and Zotterman's interpretation combined with part of Ebbecke's, but it also showed that Rein's was completely wrong. Hill and Taylor (1937, p.94P) not only demonstrated, using chemical indicators, that the passage of current through the skin produced measurable traces of acid under the anode and alkali under the cathode, but also that the more acidic the anodic contact solution was made to begin with, and the more alkaline the cathodic contact solution was made to begin with, the lower was the current density necessary to produce breakdown at that site

(cf. Table 12.7.a.A). They also followed Ebbecke in suggesting (p.94P) that the pain associated with breakdown resulted from the stimulation of nerve endings by H^+ or OH^- ions released at the two electrodes.

Meanwhile the contemporary French opinion had reached the same conclusion as Hill and Taylor, and Darier et al. (1936), besides supporting the "corneum hypothesis", pointed out that lesions appearing at anodic sites of breakdown are dry and hard like those produced by acids, and that cathodic lesions are soft, more extensive, and slower to heal, like those produced by alkalis. (From the similar observations of Rein, (1929, pps. 63, 64) it would seem that Darier et al. were referring to the use of neutral or alkaline contact electrolytes.)

Finally, coming to the work of Rosendal, we find that he did not wish to commit himself to a very informative interpretation, and stated only that he supposed breakdown resulted from "a short-circuiting of the stratum corneum at voltages above 2 volts" (1943, p.141).

12.7.d A new interpretation

Let us now examine more closely possibilities concerning the anatomical site of electrical breakdown. There are basically three: breakdown may occur (1) in some epidermal layer(s) beneath the corneum, (2) in the corneum itself, or (3) in the skin appendages.

With regard to the first possibility, a breakdown of some epidermal layer(s) beneath the corneum, as postulated by Ebbecke and by Rein, would only produce a very small effect upon the skin conductance (cf. the criticism of Cambrai's conclusions outlined in subsection 12.5.e), due to the large resistance of the corneum in series with such lower epidermal layers. Ebbecke and Rein of course thought that the resistance of the corneum was negligible, but as we have seen, this view has since been thoroughly disproved by skin-stripping experiments (e.g. Rosendal, 1943; Gerstner and Gerbstädt 1949; Pfister and Schulz, 1966; Yamamoto and Yamamoto, 1976a). Consequently, sub-corneum epidermal layers can be ruled out as the site of any significant breakdown.

However, a "short-circuiting" of the corneum (as postulated by Lewis and Zotterman, and by Rosendal) could indeed increase skin conductance by an appropriate amount. Such a short-circuiting could occur though either by breaching the corneum directly, for example by pricking it (Lewis and Zotterman), or by chemically eroding through it (Hill and Taylor), this being possibility (2), or by breaching the skin appendages, the stratum corneum could be short-circuited indirectly, this being possibility (3).

Now, the fact that pain and local hyperaemia are associated with the occurrence of a breakdown, in my opinion strongly suggests that some form of "rupture" of the skin appendages is involved, since it is here rather than close to the corneum that there are nerve endings and blood vessels to be stimulated. A further consideration weighing in favour of possibility (3)

and against possibility (2) is that of the timescale of breakdown. Breakdown takes place within "a few seconds" (Ebbecke, 1923, p.202; cf. Rein, 1926c, pps. 222, 223) of the application of a supra-threshold current density. It is hardly likely that a pH-dependent electrolysis could break the entire thickness of the corneum in such a time without always producing a fearsome lesion, but ionic diffusion into the appendageal ducts can take place within times of this order (for example, Scheuplein, 1967, Fig.2, and 1978, p.1733, gives a lag-time of 6.7 seconds for diffusion into an "average" hair follicle), and indeed Abramson and Gorin (1940a) showed that the only significant diffusion of ions was into appendages within times of this order.

Some other evidence pro and con the involvement of appendages tends to balance out. Ebbecke (1921, p.243) said that the sensitivity of the skin to the "local galvanic reaction" did not correlate with the density of sweat glands on the body; it is for example only obtainable with difficulty on the palms, where sweat glands are numerous (and active), yet was obtainable without difficulty on the extensor aspect of the upper thigh, where sweat glands are few (and not very active). Ebbecke did not mention however that this evidence against sweat glands is equally evidence in favour of hair follicles, and so it does not follow (as he thought it did) that appendages are not involved in the phenomenon of breakdown. Rein (1929, p.81) said that the local galvanic reaction can still be elicited even if the corneum is stripped off. If this is true, it supports the role of the appendages. Conversely however, Hill and Taylor (1937, p.94P) stated that lesions resulting from breakdown did not appear to be associated with hair follicles. Thus the question of the involvement of appendages is not clear-cut, but I think that the evidence of nerve and blood vessel stimulation plus the timescale consideration, makes it likely that possibility (3) will in fact eventually be vindicated.

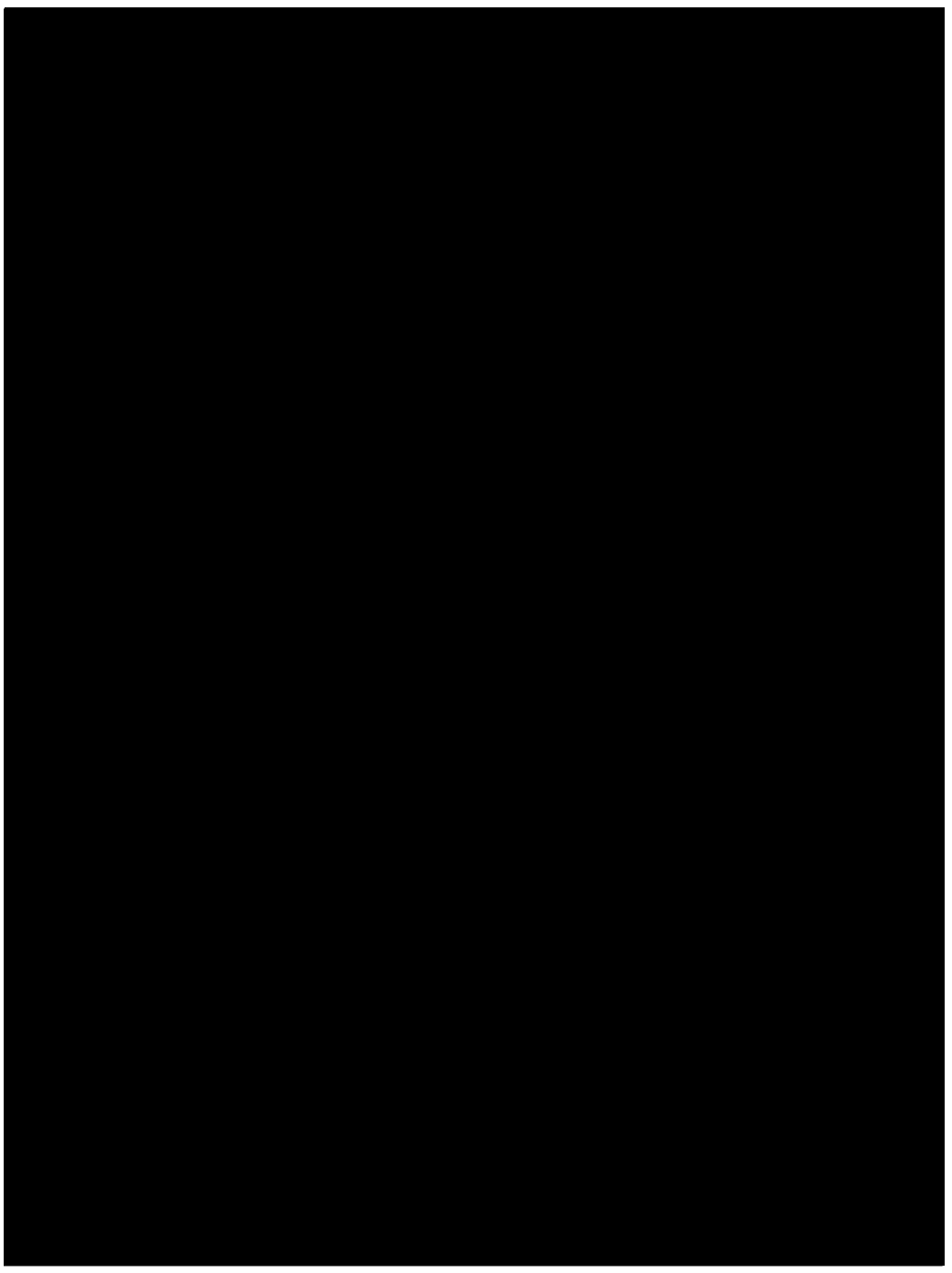

Fig. 12.7.d.I

Let us then formulate a new interpretation of breakdown rather more succinctly.

(i) Electrolysis of the contact electrolyte leads to ionic concentration differences localized to the area of the electrode, which, if small, will produce correspondingly larger concentration differences per unit current flowing (cf. the needle-tip electrode experiments of Ebbecke, 1923, and Lewis and Zotterman, 1926-27). The localized ionic concentration differences will be manifested as localized changes in pH. (These are simply those ideas of Ebbecke which have been verified experimentally by Hill and Taylor. We may also expect that the more moist the skin is, the greater will be its ability to dilute a destructive ionic concentration, meaning that breakdown will only occur at a higher current density, as was in fact observed by Hill and Taylor. As to their further observation (following Rein) that the current threshold depends on the pH of the contact electrolyte, this also accords with our present interpretation).

(ii) The pH changes propagate down into skin appendages, as shown schematically in Fig. 12.7.d.I, with a lag-time of a few seconds, as observed by Ebbecke and by Rein, and also agreeing with the calculations of Scheuplein).

(iii) The acid or alkali then acts upon the cells of the appendageal ducts in such a way as to cause them to increase their permeability. This increase may be small, or very large and very rapid indeed - a catastrophic "rupture". The permeability increase allows the acid or alkali to enter the dermis (cf. Fig. 12.7.d.I from Pillsbury and Heaton, 1980), and so to stimulate nerve endings, causing the release of agents of the inflammatory response, leading to local hyperaemia and possibly whealing. The pH-change-initiated increase in appendageal permeability also decreases the electrical resistance of the skin (the electrically-

induced "local galvanic reaction" of Ebbecke), and possibly does so catastrophically ("breakdown").

(Amongst the evidence for this is that of Allenby et al. (1969, Fig. 3B), who showed that the low-frequency (1.5 Hz) electrical impedance of human skin in vitro is very sensitive to the ambient pH. The phenomenon may also be related to those ductal permeability changes induced by hydrostatic or osmotic pressure which Fowles (1974) has reviewed).

(iv) For acidic contact electrolytes, breakdown takes place at a lower current density under the anode than under the cathode, probably because under the anode the solution is made even more acidic by the progress of electrolysis, whereas under the cathode the solution becomes rather less acidic. For similar reasons breakdown takes place at a lower current density under the cathode than under the anode if neutral or alkaline contact electrolytes are employed. (This corresponds to the findings of Rein, 1926c, as we have already seen. Compare also Table 12.7.a.A).

Now on the basis of this new interpretation we may also account for the diminution of the amplitude of STCCPs as reported by Rosendal (1943, or see subsections 12.6.b and 12.6.f). In Section 12.6 a model was arrived at in which STCCPs were dependent upon changes in the fluid content of appendageal ducts, and the possibility of (electro-osmotically) filling or emptying a duct rather than of simply transporting fluid directly through it depended upon there being a duct wall having a limited rate of passage of fluid across it. However, if this duct wall is made more permeable, such that the passage of fluid across it is made easier, then fluid will not as readily accumulate in the duct and there will be a diminution of the duct swelling/widening effect. Similarly, fluid will be more easily replaced through the wall, and there will be a diminution of the duct shrinking/narrowing effect.

Consequently we may expect that if the wall is made very permeable, then the difference in the degree of shunting observed between the cases of anodic conduction and cathodic conduction ought to be very much reduced, as was indeed found by Rosendal. I cannot at the moment however think of any interpretation of Rein's observation of the *reversal* of STCCP polarity dependences following breakdown (1926b; see subsection 12.6.b), but then neither could Rein himself, and, so far as I know, no-one has reported this phenomenon again. It certainly conflicts with the findings of Rosendal.

Thus in conclusion, it seems that the new interpretation outlined in (i) to (iv) above is able to account for all the observed phenomenology of breakdown, with the exception of the STCCP reversals noted by Rein, but probably not by anyone else.

12.7.e An equivalent circuit to model breakdown

We have seen that the phenomenology of the electrical breakdown of skin is very complicated, and indeed involves a number of chemical effects. It therefore follows that any electrical equivalent circuit proposed to model this phenomenology will only be able to do so in a rather approximate way not really analogous to the processes taking place in the skin.

Since this Section has drawn together evidence from which it was concluded that the electrical breakdown was primarily that of the resistance of the skin appendages, the effects can be modelled by connecting in parallel with the equivalent circuit of the upper duct, Fig. 12.6.h.I, a voltage reference diode in series with an inductance. When the voltage across the skin, V_{app}, is then sufficient to produce a voltage V across the upper duct great enough to cause the voltage reference diode to break down, the resistance of the upper duct will be very drastically reduced, although this reduction will be delayed a short while after V_{app} reaches the critical value due to the step-function response of the inductance. This simulates the "few seconds" delay noted by Ebbecke (1923, p.202) and Rein (1926c, pps. 222, 223). Moreover, breakdown will take place at a lower value of V_{app} for that polarity of V_{app} which produces a more resistive upper duct, and this as we have seen in the foregoing subsections, is what is found clinically. Finally, the occurrence of breakdown will substantially reduce or even abolish the possibility of observing STCCPs in the model, which is also what is found clinically.

12.8 A summary of the new phenomenological framework and its proposed interpretation

After a general introduction in Section 12.1, the process of laying a foundation was continued by reviewing phenomena which affect the electrical properties of an area of skin whatever magnitude or polarity of voltage or current is applied to that skin, namely, the effects of the diffusion of water and electrolytes through the stratum corneum with or without the presence of an electric field. These effects were called "long-time-constant artefactual skin conductance changes", and were shown to be dependent in general upon various external factors under the control of the investigator, and also upon the magnitude and sign of the fixed charge of the stratum corneum, which is itself partially dependent upon external factors. Some electrodiffusion theory was then extracted from the biophysical literature and simplified enough to confirm an empirical algebraic description of these complicated phenomena. The algebraic description was then associated with an equivalent circuit containing an inductance, and finally the circuit was elaborated so that its behaviour corresponded more closely to that observed for human skin in vivo.

Having dealt with those phenomena which affect the electrical properties of skin at all values of applied voltage, including zero, the review proceeded to consider the electrical behaviour of skin at zero and successively large magnitudes of applied voltage. The sequence began in Section 12.3, which discussed the electrical properties of skin at zero applied voltage in the historically appropriate context of a review of the investigation of the electrical properties of skin by psychophysiologists. The various psycho-physiological "electrodermal measures", or electrical indices, were introduced, namely the skin conductance level, the skin potential level, the skin conductance response and the skin potential response. These indices have been shown

to be related to various physiological factors, including the e.m.f. generated across the epidermal layers, the electrical conductance of the epidermal layers, the e.m.f. generated across the duct walls of the skin appendages, and the electrical conductance of these appendages. The way was considered in which these physiological factors are interpreted in the Fowles physiological model (1974), and represented correspondingly in the Fowles equivalent circuit, which, it was noted, still seemed to be the best available in the psychophysiological literature. However, there have since been some modifications and improvements by Woodrough (1976), although these do not seem to be widely known, and the present Chapter of this thesis, Chapter 12, has provided a considerable further elaboration of the Fowles physiological model, together (in the next Section) with a correspondingly considerable elaboration of the Fowles equivalent circuit.

After Section 12.3 we temporarily parted company with the "electrodermal measures" SPL, SCR and SPR because they do not seem to have been investigated systematically at non-zero applied voltages - indeed there would be little point in doing so. Thus we were only able to continue to consider skin conductance (level) as a function of applied voltage.

For what were then in Section 12.4 called "very low" applied voltages, the skin conductance is linear, and may be completely described in terms of the indices appearing in the Cole equation (cf. Section 4.2). The detailed interpretation of the linear behaviour should in principle be easier than the detailed interpretation of the non-linear behaviour, but nevertheless proved to be so difficult that a whole Chapter was devoted to proceeding with the attempt (Chapter 11). The linear properties of skin were later briefly re-introduced in Section 12.4, to set them into their proper context amidst the relatively less well-known and less well classified non-linear properties.

In Section 12.5 we reviewed the literature of what has been termed "phoreography", that is, the plotting of current/voltage characteristic curves obtained with the use of chopped voltage-ramp generators, with the intention of measuring and interpreting the current and voltage values above which skin conductance is no longer linear. Indeed, for applied voltages magnitudes a little greater than those within the linear domain, skin conductance exhibits what has been termed "time-independent non-linearity", that is, it increases with increase in applied voltage magnitude, but not with increase in applied voltage duration. The effect is also independent of applied voltage polarity, and thus seems to depend only upon field strength. As to the interpretation of these phenomena, the concept prevailing in the literature that they depend upon living processes of cells in some sub-corneum epidermal layer was shown to have a number of arguments against it, not the least of which was that it predicts completely the wrong form of current/voltage characteristic curve. It was further shown however that the hypothesis that the phenomena resulted from field-dependent electrical conductance increases in the duct walls of skin appendages could satisfactorily account for the same pool of experimental observations, while also being capable of producing the correct form of current/voltage characteristic curve, and moreover of interpreting other experimental observations such as the high voltage required to produce a "phoreographical response" in those people with active sweat glands. Finally, a number of biophysically viable mechanisms were suggested for the proposed field-dependent conductance increase in the duct walls.

In Section 12.6 we considered the fact that for still larger voltage magnitudes the non-linearity suddenly does become dependent upon the duration and also the polarity of the applied voltage, in addition to the dependance on its magnitude. In particular, skin conductance is found to increase or

decrease with time depending upon the polarity of the probe electrode compared with that of the fixed charge of the corneum. These perturbations of conductance are reversible, and the applied voltage magnitude determines their maximum amplitude. The time constant for equilibration is of the order of ten seconds, much shorter than that for the corneum diffusion phenomena of Section 12.2, and one of a number of indications that these so-called "short-time-constant conductance perturbations" (STCCPs) involve ions moving through skin appendages rather than through the corneum. After a long review of many possible interpretations of this phenomenon, it seemed most reasonable to conclude that it is due to alterations in appendageal duct filling resulting from electro-osmosis.

Finally, in Section 12.7, we examined the electrically-induced breakdown of the electrical resistance of the skin which occurs at "large" applied voltages ("large" however means large in physiological terms, and so may mean only a couple of volts). The phenomenology of such a breakdown may be summarized as follows. If the current density flowing through the skin exceeds a certain threshold value, then after a short latent period of a few seconds, the conductance of that skin increases very abruptly and substantially, increasing still further with increase in the magnitude and/or the duration of application of the applied voltage. The requisite threshold value of current density depends upon the polarity of the probe electrode compared with the polarity of the fixed charge of the skin, and also upon the pH of the contact electrolyte. The occurrence of breakdown is associated with a local inflammatory response of a severity depending on the current density employed. Feelings of itching, burning or pain, local hyperaemia or even whealing may all be induced. Also, it is very difficult if not impossible to observe the STCCP phenomena of Section 12.6 following such a breakdown. After another long review of a number of possible interpretations

the following mechanism was proposed as apparently being the most likely. Electrolysis of the contact electrolyte produces pH change localized to the area of the electrode, and of a magnitude determined by the current density at the electrode. These pH changes propagate down into skin appendages with a lag time of a few seconds, and chemically attack the duct walls, increasing their permeability and thus the electrical conductance of the skin, whilst simultaneously inducing a local inflammatory response. The partial or total disruption of the normal physiological milieu of the appendageal duct walls (for example their fixed charge) is also reflected in the partial or total abolition of STCCPs.

Thus in conclusion, it could be said that *most of the non-linear electrical phenomenology of skin seems to give information about the physiological state of the skin appendages, whilst as we saw in Chapter 11, most of the linear electrical phenomenology of skin seems to give information about the physiological state of the stratum corneum.* Such a statement is useful however only so long as it is remembered that it is only a greatly over-simplified generalization.

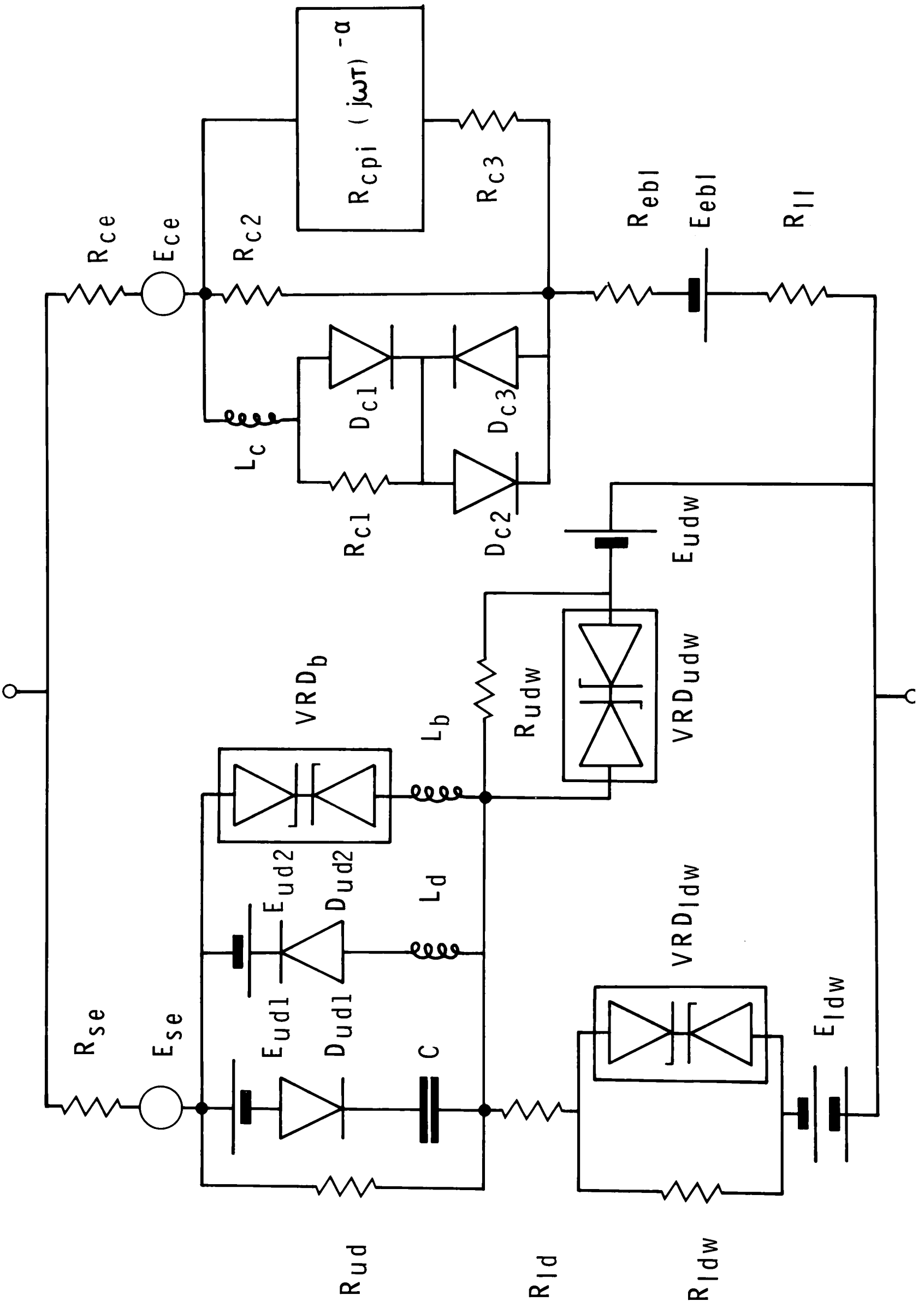

Fig. 12.9.I A suggested skin-equivalent circuit.

12.9 A suggested skin-equivalent circuit

An equivalent circuit, like an algebraic equation or a chemical formula, is a very good way of describing a lot of phenomenology very concisely. Therefore, since many of those people working on the electrical properties of skin have been trained to appreciate the behaviour of a system merely by looking at a suitably-designed equivalent circuit for it, this form of representation affords a powerful means of communicating the electrical phenomenology of skin, and it should be used as such. However, to do so we ideally need to have available an equivalent circuit which models as much of the behaviour of the skin as possible as faithfully as possible, within the limits imposed by keeping the circuit reasonably simple. The present subsection outlines a suggestion for such an equivalent circuit, and indeed *this circuit is so far as I know the first ever to model all the salient features of the electrical phenomenology of human skin in response to A.C. or D.C. of arbitrary amplitude.* Previously published circuits have all been very much more restricted.

Consider then Figure 12.9.I. This may seem to be a little complicated at first but it is quickly possible to find one's way about it; as a beginning note that the upper terminal is supposed to represent the region of the electrolyte in contact with the surface of the skin (even if this electrolyte is only composed of sweat), and the lower terminal the region of the deep dermis. Thus the circuit represents the electrical properties of a single area of skin from the level of the surface of the stratum corneum down to the region of the deep dermis. Note too that at the top the circuit splits into two branches; the right hand one is intended to represent the electrical properties of the various layers of the skin, and the left hand one is intended to represent the electrical properties of the various appendages

of the skin, i.e. sweat glands and hair follicles. These appendages, although biologically very different, appear in fact to present much the same sort of pathway for electrical conduction, and so have been lumped together as a sort of "generalized appendage".

Let us firstly see how the circuit models the electrical properties of skin in the case of zero applied voltage. These properties can be completely described by the SPL and the SPR, and the best physiological model available for them is that of Fowles (1974), which was reviewed in subsection 12.3. The circuit of Figure 12.9.I is an elaboration of, and thus contains, that of Fowles (compare Fig.12.3.c.II). It has the e.m.f. across the lower duct wall, E_{ldw}, which Fowles called E_1, the e.m.f. across the upper duct wall, E_{udw}, which Fowles called E_2, and the e.m.f. across the "epidermal barrier layer", E_{ebl}, which Fowles called E_3. The resistance of the lower duct wall, R_{ldw}, is what Fowles called R_4, that of the lower duct, R_{ld}, was termed R_2, that of the upper duct wall, R_{udw}, was called R_3, and that of the epidermal barrier layer, R_{ebl}, was called R_6. However, the resistance of the upper duct itself, which Fowles called R_1, and that of most if not all the corneum, R_5, have been greatly elaborated in Fig.12.9.I to model the complicated electrical phenomena which as we have discussed in preceding subsections seem to take place in these regions. The elaborations nonetheless still contain a purely resistive component at all frequencies and amplitudes of electrical stimulation, and so the present circuit must be at least as effective as the Fowles circuit in modelling "electrodermal measures" generally, not just the SPL and the SPR. Moreover, for these skin potential measures it is actually better than the Fowles circuit, since from the work of Woodrough (1976) have been taken the resistance R_{se} and the e.m.f. E_{se} of the interface between the ductal fluid (usually sweat) and the contact electrolyte, together with the resistance R_{ce} and the e.m.f. E_{ce} of the interface between the corneum and the contact electrolyte.

Having therefore shown that the present circuit includes all the elements used in equivalent circuits modelling the psychophysiological "electrodermal measures", let us now note that the other main type of equivalent circuit for skin is also contained in the present one. This type is that used to model the Cole equation for the linear electrical properties of skin, and has two equivalent forms (Salter, 1979, Fig.1a). An introduction to these representations of the Cole equation was given in Sections 4.2 and 11.2. The necessary polarization impedance in the corneum (cf. Chapter 11) is represented by $R_{cpi}\ (j\omega\tau)^{-\alpha}$. and the externally observed values of R_o and R_∞ will be a function of the impedances of all the components of the circuit.

At higher applied voltages the breakaway from ohmic conduction into "time-independent non-linearity" (Section 12.5) is modelled by the circuit sub-unit we considered in subsection 12.5.g placed in an appropriate position within the equivalent circuit. In fact, since it represents the properties of the wall of the appendageal duct, it has been employed twice, in the positions corresponding to those used by Fowles to represent the properties of the lower duct wall and the upper duct wall respectively. However, as to which of these two sub-units is likely to be the first to conduct non-linearly as voltage is increased, it is difficult to say, since although on the basis of the circuit arrangement one would expect it to be the upper duct wall, the physiological evidence given by Fowles (1974) indicates that the upper region of the duct wall is less delicate and responsive than the lower part. This would have to be simulated by setting the Zener breakdown of the voltage reference diode VRD_{udw} to be at a higher potential difference than that for VRD_{ldw}, and perhaps then the ohmic breakaway would take place first in the lower duct wall. There is not yet enough evidence to decide.

The phenomena involved in "short-time-constant conductance perturbations", STCCPs, also known as "time-dependent non-linearity", were reviewed in Section 12.6 and hypothetically related to processes occurring in the upper regions of the appendageal ducts. The circuit developed in subsection 12.6.h to model these phenomena is therefore included in the corresponding part of Fig. 12.9.I, where we find that it produces a generalization of Fowles' upper ductal resistance R_l.

At applied voltages higher than those required to cause the first break-away from ohmic conduction, the remaining resistance of the skin undergoes a catastrophic "breakdown" which Section 12.7 proposed to be associated with the appendageal ducts, and which was modelled by the circuit discussed in subsection 12.7.e. At these voltages, since VRD_{ldw} and VRD_{udw} have already broken down ("softly", however, to give the "time-independent non-linearity" response), the resistance remaining in the appendages is almost exclusively in the upper ducts, and so it is here that a shunt must be placed which will break down when appropriately high voltages are applied. This function is fulfilled by VRD_b, while the inductance L_b provides the short time delay we saw in subsection 12.7.e to be a necessary feature of a faithful model. The breakdown of VRD_b of course tends to short that part of the equivalent circuit capable of reproducing STCCPs, and this is appropriate, since STCCPs are much reduced if not abolished after the occurrence of breakdown.

In conclusion, note that the circuit which was developed in subsection 12.2.g to represent the "slow-time-constant artefactual skin conductance changes" caused by the electrodiffusion of water and electrolytes into the corneum, has been included in the appropriate part of Fig. 12.9.I in such a way as to be able to affect the value of R_o, which is of course what is found to be the case experimentally (see Section 12.2). The diode D_{cl} (as also the diodes D_{udl} and D_{ud2}), has been connected in the way appropriate

to positive fixed charge on the stratum corneum. Note too that a resistance R_{11} to represent the living layers of the skin below the stratum granulosum has been included in the non-appendageal branch of Fig. 12.9.I. This is reasonable since the impedance of the skin layers beneath the stratum corneum is practically independent of frequency (Gerstner and Gerbstädt, 1949, p.117; Yamamoto and Yamamoto, 1976a, p.152).

Finally, it is suggested that it may be helpful to re-read Section 12.8, and to compare the discussion there with the equivalent circuit for skin given here.

Chapter 13. A SUMMARY OF THE PRESENT WORK

13.1 A summary of Chapters 1 to 12

Chapter 1 discussed the need for objective and preferably non-invasive measurements of the state of the skin, and the reasonableness of taking an electrical approach to providing such quantification. It was noted that the consequent popularity of electrical approaches to skin quantification has however led to a multiplicity of papers being produced which can only be described as misleading, in that they over-simplify the various aspects of dermatology, physics and electrical engineering relevant to them. Another deficiency in the literature is its very incomplete systematization of the observed phenomenology.

Therefore, in this thesis the accumulation of further data took second place to a concentrated attempt to improve the foundations of the subject, that is, deciding what measurements should be made and why, then how best to make them, and finally, having made them and having examined the form of the electrical properties of skin derived from them, deciding from biological and physical considerations just how these properties might most reasonably be interpreted.

Chapters 2, 3 and 4 were intended to set the conceptual scene. Chapter 2 introduced some relevant aspects of skin physiology and pathophysiology, and Chapter 3 some relevant aspects of the theory of the movement of electrical current through materials. The way was thus prepared for Chapter 4 to provide an introduction to the observed electrical properties of skin, and to mention and to systematize a wider range of phenomenology than any previous single review known to me.

In Section 4.2, the Cole complex impedance equation

$$Z = R_{\infty} + \frac{R_o - R_{\infty}}{1 + (j\omega\tau_p)^{1-m}} \qquad (13.1.1)$$

was introduced as being a very accurate representation of the linear electrical properties of skin, having for any particular skin region at a particular time some corresponding values of the parameters R_{∞}, R_o, τ_p and m. The consequent uselessness of making measurements at only one value of frequency ω was emphasized, since many past investigations have relied upon such a methodology. It was also pointed out that the Cole equation corresponds to complex conductivities such as are found for inhomogeneous semiconductive materials, since this may be highly relevant to the interpretation of the phenomenology of the linear electrical properties of skin, and possibly of the non-linear ones as well.

Section 4.3 discussed the phenomenology of non-linearity and time-variance in the electrical properties of skin, as a function of the voltage applied across it.

Section 4.4 then pointed out some limitations of past characterizations of the electrical properties of skin:

(1) There have only been a few attempts to define properties of a single skin region in vivo, and they were less successful than was claimed at the time.

(2) The effects of contact electrolyte absorption have not been adequately allowed for or avoided.

(3) Measurement techniques have not usually been well suited to characterizing the parameters of the Cole equation.

(4) Measurements were indeed often made at only one frequency.

(5) Many investigators were unaware of the existence and possible influence

of the non-linear electrical properties of skin.

(6) Many others made too few experiments before publishing their conclusions.

In Chapter 5, Section 5.1 considered skin as a "Black Box", and began to develop a way of characterizing it which would avoid the artifical "compartmentalization" of past measurements of the A.C. properties of skin, its D.C. current/voltage characteristic curve, and the skin potential level.

Section 5.2 provided an introduction to system characterization in the time domain and the frequency domain, and the advantages of a frequency-domain method in our present application.

Section 5.3 discussed the frequency-domain characterization of the electrical properties of not necessarily linear conductances, by means of harmonic analysis. There then followed a description of implementing such a harmonic analysis by means of a discrete Fourier transform (DFT), and of estimating linear electrical properties as a subset of the not-necessarily-linear ones.

In Chapter 6, Section 6.1 considered some properties of electrodes, and Section 6.2 the basic principles of using two or more electrodes in circuit arrangements to measure mutual and transfer impedances.

Subsection 6.3.a then dealt with the advantages and disadvantages of using each of these multi-electrode methods in attempts to distinguish the properties of individual epidermal sites from those of other such sites and those of the dermis and deeper tissue below them. It was shown that no presently available multi-electrode method was able to fully and continuously accomplish such a separation.

In subsection 6.3.b a new multi-electrode technique was then proposed which combined the advantages of the others while cancelling out their disadvantages. This technique seems to be the first and the simplest to be able to continuously and separately monitor the properties of two regions of

epidermis, those of the dermis and deeper tissue between them, and those of the electrodes.

In subsection 6.3.c a way was described of using the new multi-electrode technique to implement the harmonic analysis of the electrical properties of skin which was developed in Chapter 5.

Subsection 6.3.d then concluded the Chapter with a demonstration of the complexity of achieving the same results without using the new multi-electrode technique.

Chapter 7 described the characteristics of the prototype electronic equipment which was developed to use the new multi-electrode technique to implement the discrete Fourier transform harmonic analysis of particular skin regions in vivo.

This equipment, known as the Fourier Transform Impedance Analyser, was built by Plessey Microsystems Ltd. of Towcester, Northants, following a design report from Oxford, at an eventual cost of some £25,000. Half of this was contributed by Plessey and the other half by Vick International Ltd. of Slough.

The electrodes used with this equipment were also described, as was the composition of the electrode gel, which is of great importance since such substances can be absorbed by the skin, and considerably alter its electrical properties in doing so.

In Chapter 8, Section 8.1 described the MINC-11 minicomputer which was interfaced with the Analyser in order to make the gathering of clinical data more rapid and thus the results more self-consistent, since the properties of skin tend to change with time.

In Section 8.2 the preparation of the subject or patient for the measurement procedure was discussed, and this was followed by descriptions of the arrangement of the equipment within the Clinical Measurement Room,

and of typical measurement procedures either using the Analyser only, or using the Analyser together with the minicomputer, in which case the programs of Appendix A were employed.

Section 8.3 then discussed how from the raw data so obtained it was possible to characterize the linear electrical properties of particular skin regions in vivo, the method involving the use of the statistical techniques of Appendix B. These were implemented by the minicomputer using programs listed in Appendix C, and finally in Section 8.3 an example was given of a set of processed results.

Section 8.4 similarly treated the topic of characterizing the non-linear properties of particular skin regions in vivo. An example of a set of final results was given, as produced by the programs of Appendix D.

The Analyser, used to gather the data to produce these results, was of course however by no means perfect, and consequently a discussion of the problems associated with it was given in Section 8.5 and Appendix E.

Chapter 9 set out to illustrate the variability of the electrical properties of normal skin, since unless the bounds of normality are known it is not possible to distinguish abnormality.

In Section 9.2 it was demonstrated that there is an enormous variation in the magnitude (but not the form) of the electrical properties of skin with body site, and with time. There is a smaller variation with skin temperature, which in vivo is accentuated by (secondary) alterations in sweat gland activity. The variations in the electrical properties of skin with temperature were analysed to demonstrate that skin behaves as a semiconductor both in vivo and in vitro, in that it has an activated D.C. conductivity, exponentially dependent upon the reciprocal of absolute temperature. The effect of the ambient relative humidity seems however to be rather small, and that of age has not yet been adequately investigated.

It is interesting that there does seem to be a difference in the magnitude of the D.C. conductivity of the skin depending upon the sex of the subject, with women having a higher conductivity than men. This effect is however only detectable by statistical examination of grouped populations of subjects.

In subsection 9.3.a it was shown that the reproducibility of our measurements could be assumed to depend only on the invariance of the properties of the skin itself. However, the properties of the skin are affected by the characteristics of the electrode gel or contact electrolyte which is used (see subsection 9.3.b), and part of the experimental basis of this thesis has been the development of electrode gels which minimize such effects. The effects of applying moisturizing substances to the skin were also investigated (see subsection 9.3.c), and shown to be dependent on the exact composition of the substance. This however is an advantage rather than a disadvantage because it gives information about the substance being applied. For example, the effect of commercially-produced moisturizing preparations seems to be different from that of pure water, and the difference may perhaps be due to the difference in the dielectric constants of the substances concerned.

Experiments which involve stripping layers off the stratum corneum with adhesive tape were shown in subsection 9.3.d to indicate that the electrical properties of each such layer are qualitatively similar, and that in particular, each obeys the Cole complex impedance equation with a non-zero value of m.

Finally, Section 9.4 discussed the dependence of the observed electrical properties of skin upon the applied voltage magnitude, and Section 9.5 demonstrated that at least at small values of applied voltage the approximately linear electrical properties of skin are very accurately described by the

Cole equation. This finding, together with those of subsection 9.3.d mentioned above, has very important implications for the interpretation of the origin of the particular form of the linear electrical properties of skin, and in fact excludes all the interpretations now current in the literature, as is demonstrated in Chapter 11.

Chapter 10 discussed what has been discovered about the electrical properties of abnormal, i.e. damaged or pathological, skin. If these electrical properties are sufficiently different from those of normal skin, then they can be used as non-invasive and objective indices of what a dermatologist would classify as abnormality.

Some introductory remarks were however necessary to point out various things, especially the fact that great care is needed to ensure that any particular methodology for characterizing the electrical properties of skin actually does characterize them in a way which is not fundamentally ambiguous, i.e. in a way defined by a unique set of physical parameters. Unfortunately much of the work in the literature does not meet this requirement, and so most published results have more alternative interpretations than seems to have been realized before.

The Chapter then reviewed what is known of the electrical properties of skin damaged by mechanical injury, scarring, or the action of ultra-violet light, and the electrical properties of skin which is pathological through the action of psoriasis, various types of eczema or dermatitis, and skin cancers. There was a concluding discussion of the electrical properties of skin affected by pathological changes elsewhere, in cases of thyroid dysfunction, cancer, and visceral disturbances leading to viscero-cutaneous reflex phenomena.

Chapter 11 presented probably the most detailed review yet produced of interpretations of the linear and possibly only slowly time-variant electrical properties of skin.

After an introductory Section, Section 11.2 described the historical development of the small-signal equivalent circuits of human skin, a process which took about fifty years to complete. Section 11.3 then reviewed some analogous phenomenologies in the hope of obtaining clues as to the interpretation of the fact that skin obeys the Cole complex impedance equation. As an aid to this search, Section 11.4 reviewed the chemical composition of the stratum corneum in order to emphasize the importance of the physics of electrical conduction in partially hydrated proteins.

Section 11.5 then proceeded to demonstrate the complete inadequacy of "Barnett-Tregear" models which assume that a spatial gradient of electrical characteristics across the depth of the corneum, for example a gradient of hydration, can explain why its impedance obeys the Cole equation.

Similarly Section 11.6 demonstrated the inadequacy of the other type of model presently available in the literature, namely that due to Edith Clar, which postulates that skin is a shunted Cole-Cole dielectric with the Cole-Cole distribution of relaxation times arising due to fortuitously appropriate forms of tangential counter-ion relaxation.

Section 11.7 emphasized the need for a more rigorous approach to the problem of analysing electrical charge transport in skin, and pointed out that the literature of solid-state physics could provide a suitable approach. Skin can be considered as an inhomogeneous (semi)conductor, and thus have applied to it the continuous-time-random-walk (CTRW) formalism recently developed to model electrical conduction in such materials. The use of this method was then explained in more detail and illustrated by examples.

Section 11.8, noting that skin and other amorphous semiconductors obey the Cole complex impedance equation, proceeded to follow and extend some aspects of the work of Lewis in suggesting that this might be a consequence of electrons or holes moving through the material via localized states

distributed in energy within bandtails of plausible shape. Various mathematical models involving the CTRW formalism were developed on the basis of this idea, and they proved to be very successful in modelling the obedience of the skin to the Cole equation.

In Section 11.9 a slightly different approach was taken to avoid the need to postulate the existence of bandtails, and thus make possible a model of conduction by ions as well as by electrons or holes. This model followed and extended some work of Pike, and then combined it with the CTRW formalism. It was demonstrated that this model could qualitatively and quantitatively model the linear impedance behaviour of skin using reasonable parameter values. Moreover, it could interpret the hydration dependence of these electrical properties of skin, as indeed also could the bandtail models of Section 11.8. It was concluded that both types of model were substantially more promising than those available in the literature at present, which indeed had earlier been proved to be inadequate in Sections 11.5 and 11.6.

Finally, Chapter 12 presented probably the most detailed review yet produced of the non-linear and not necessarily slowly time-variant electrical properties of skin. It briefly touched upon the work of psychophysiologists, and on the basis of a review of the last sixty years of relevant work in the German and French literature, called for a radical re-interpretation of the findings of Cambrai and colleagues as to the physiological and pathophysiological meaning of "phoreography" introduced by Kryspin (1965), with far greater emphasis upon the properties of the skin appendages than has been thought to be appropriate by Cambrai et al. themselves.

Various other aspects of the literature of skin electrophysiology were also examined and new proposals made concerning their interpretation. Following a systematization of all this phenomenology, the Chapter culminated with the

presentation of a suggestion for an equivalent circuit for skin which models most if not all of its distinctive electrical properties, and which certainly models more than any other skin-equivalent circuit presently in the literature.

A rather more detailed summary of Chapter 12 can indeed be found within it, namely Section 12.8, which provided a brief reminder of the phenomenology to be modelled by the new skin-equivalent circuit in Section 12.9.

13.2 A selection of those aspects thought to be contributions to the subject

13.2.a Measurement techniques and data reduction methods

This subsection and the three following ones are intended to briefly recall some of the aspects of the work reported in earlier pages which are thought to be distinct contributions to the subject of the thesis. In each case the brief consideration of such a topic is accompanied by a note of the part of the thesis in which more details are given.

Firstly then, considering measurement techniques and data reduction methods, it should be stated that subsection 6.3.b described what so far as I know is the first published method of separating the electrical properties of epidermis, dermis and electrodes. The method was earlier published in a book (Salter, 1979).

Subsection 10.1.b, again following Salter (1979), emphasized the importance of drawing a full complex impedance locus plot, or a diagram containing an equivalent amount of information, if fundamental ambiguity is to be avoided in reporting clinical results.

Appendix B provided the first derivation of the standard errors of those parameters of the Cole equation describing the linear electrical properties of a single skin site. It also described a much more thorough set of procedures for the reduction and analysis of such data than has been published before.

Finally, subsection 9.3.b reported the progress which has been made in reducing the effects of the absorption of contact electrolyte or electrode gel upon the electrical properties of the skin.

13.2.b Clinical results obtained

Using the new multi-electrode method described in subsections 6.3.b and 6.3.c, it has been possible for the first time to obtain complex impedance loci and current/voltage characteristic curves for particular regions of epidermis (and dermis) *as if it were isolated even though it is in reality still in vivo*. Some example results were given in Sections 8.3 and 8.4.

Secondly, the pertinence of the Cole complex impedance equation was tested in Section 9.5 and fully vindicated, with important theoretical consequences which were described in detail in Chapter 11.

Subsection 9.2.a reported the discovery of a considerable site-to-site variability in the magnitude of the Cole equation distribution parameter m, with the implication that in no sense does each subject have a unique "phase angle", even at very high frequency, such as they were thought to have by Barnett (1938) and apparently all subsequent investigators. This finding therefore shows that the results presently reported in the literature are simplistic, and so of lesser importance than has been assumed.

Finally, subsection 9.2.c demonstrated the semiconductivity of human skin both in vivo and in vitro. This has very great theoretical and practical implications, since it may be possible to apply to the investigation of the properties of human skin at least some of the powerful techniques developed in recent years for the investigation of the properties of semiconductive materials used in the electronics industry.

13.2.c Interpretation of the linear electrical properties of skin

Chapter 11 provided what so far as I know is by far the most detailed review of the linear electrical properties of skin ever published.

In Sections 11.5 and 11.6 the previously available interpretations of the form of these properties were demonstrated to be entirely inadequate.

Sections 11.7, 11.8 and 11.9 therefore presented new theories based upon the literature of solid-state physics, leading to models which can not only accurately reproduce the observed forms of the linear electrical behaviour of skin, but which are also based upon the known properties of those materials from which skin is made. These models are therefore biologically as well as physically reasonable and interpretable.

13.2.d Interpretation of the non-linear electrical properties of skin

Chapter 12 provided what so far as I know is the most detailed review to date of the literature describing the not necessarily linear, and frankly non-linear, electrical properties of skin, and deduced from the review a large number of new interpretations of this phenomenology, so many indeed as to warrant a special Section to summarize them, Section 12.8.

One of the main conclusions of the Chapter, reached in Section 12.5, was that the technique of "phoreography", introduced by Kryspin (1965), does not in fact give as much information about the epidermis as it does about the skin appendages, contrary to the conclusions reached in the various publications of Cambrai and colleagues.

The culmination of Chapter 12 was however the presentation in Section 12.9 of a suggestion for a new equivalent circuit to model most if not all the known electrical properties of human skin, and which certainly models more than any other skin-equivalent circuit presently in the literature.

Chapter 14. FUTURE WORK

14.1 Using the electrical consequences of the condition of the skin

I doubt that any cardiologist would attempt to assess the state of the heart by examining just the P wave of the ECG alone. He would want a great deal more information, and so should any investigator seeking to draw conclusions from the electrical properties of the skin. A particular value of any one electrical property is not likely to provide a sufficiently specific indication of a particular condition of the skin, but the simultaneous observation of particular values of a number of electrical properties may very well do so. This was our reason for simultaneously characterizing as many of the electrical properties of skin as possible, and for characterizing those relating to as specific a skin region as possible.

I hope that this thesis has re-worked and strengthened the groundwork of the subject enough to encourage others to proceed with the potentially very promising attempt to correlate physiological or pathophysiological conditions of the skin with particular conditions of its electrical characteristics, or what might be termed various "electrical syndromes".

One of the interesting correlations that we do in fact seem to have established already is that of the increase in the Cole equation parameter m with increasing hydration of the stratum corneum (see subsections 9.3.c and 11.9.h). This correlation indicates that it may be more sensible to make low-frequency measurements to determine m than to make the type of high-frequency measurements made by Tagami et al. (1980), who admitted on p. 503 of their paper to only being able to monitor very superficial water, and therefore not that which exerts the plasticizing action on the stratum corneum which is essential for its normal functioning. Making the same type of measurements as did Tagami et al. (1980), but at some lower frequency,

would of course give information averaged over a greater depth of the corneum, but this information might not be as specifically hydration-dependent as is the value of the parameter m. No doubt further work will however decide the best way of monitoring this medically very important quality of the skin.

14.2 What might it be best to do next ?

Since I think that this thesis has helped theory to outstrip experiment for the first time in decades and maybe for the first time ever in this subject, it would seem that a lot more experimental work is now needed.

Firstly, the demonstration of the semiconductive nature of skin in subsection 9.2.c will I hope suggest ways in which the powerful techniques developed in recent years to assess semiconductive materials used in the electronics industry can be brought to bear on the problems of assessing the condition of human skin which we considered in Chapter 1. Consequently I think that many in vitro studies are now called for of skin as a semiconductive material, hopefully to be followed in due course by suitably modified in vivo techniques.

It is of course immediately possible to continue with the type of in vivo investigations described in this thesis, and I expect that these will indeed continue even while being enriched and improved on the basis of the conclusions derived from the in vitro semiconductive studies suggested above.

Certainly the continued accumulation and interpretation of such in vitro and in vivo results should make possible the design of equipment to monitor non-invasively and increasingly more specifically those electrical conditions of the skin which by then will be known to be the most relevant to the particular physiological, pathophysiological or industrial aspect of dermatology which is of interest.

PART VI: APPENDICES

APPENDIX A: PROGRAM "TEST", PROGRAM "HEXDAT" AND PROGRAM "PROC"

These programs were written in MINC BASIC for the purposes discussed in subsection 8.2.c, and should be largely self-explanatory.

The optional program HEXDAT is followed here by a printout of the results of running it after TEST had been run with the Analyser connected to a test network. Two frequencies were employed, namely 100 Hz and 20 Hz, and I_{in} was 10 μA. A 47 kΩ resistor was connected between electrode leads 1 and 2, a 10 kΩ resistor between leads 2 and 3, and a 47 kΩ resistor in parallel with a 47 nF capacitor was connected between leads 3 and 4. Finally, a 10 kΩ resistor was connected between leads 1a and 4a.

The results displayed on the front panel were of course reasonable at both frequencies, but as is described in Section 8.5, the decoded hexadecimal data is not necessarily reasonable. In the printout, "Channels 1, 2, 3, 4 and 5" deal respectively with measurements of V_{in}, V_{14a}, V_{34}, V_{24} and V_{14}, meaning that in this case channels 3, 4 and 5 included a reactive component due to the capacitor. It was these channels which could not be interpreted reasonably. Many similar experiments confirmed that the presence of a reactance in the test network would make the serial interface data of the appropriate channels unintelligible, although the front panel data were still correct. This problem is discussed in Section 8.5.

Program PROC was never completed for reasons also discussed in Section 8.5, although similar programs were written and run successfully on the main hospital computer (cf. program VICHAR in Appendix D). An embryonic form of program PROC is given here, together with a printout of the results produced by its operation on the contents of the file HEXDAT following the run of TEST we have considered above.

For the nth harmonic, the converted hexadecimal numbers of channel j give the values of

$$E(V_j) = \sum_{k=0}^{k=N-1} V(kT) \begin{matrix}\cos \\ \text{or} \\ \sin\end{matrix} (n2\pi\frac{k}{N})$$

with N = 1024, n = 0, 1, 2, 3, 4 and j = 1, 2, 3, 4, 5. (A.1)

Then to obtain offsets

$$\tfrac{1}{2}a_o = \frac{1}{N} \sum_{k=0}^{k=N-1} V(kT) \quad (A.2)$$

one should calculate $E(V_j)/1024$ for j = 1, 2 ... 5 and n = 0. (A.3)

To obtain

$$E(I_{in}) = E(V_{in})/R$$

$$= \frac{1}{100\ k\Omega} \cdot \frac{2}{N} \sum_{k=0}^{k=N-1} V(kT) \begin{matrix}\cos \\ \text{or} \\ \sin\end{matrix} (n2\pi\frac{k}{N}) \quad (A.4)$$

one should calculate

$$\frac{1}{100\ k\Omega} \cdot E(V_j)/512 \quad \text{for } j = 1 \text{ and } n = 1,2...5. \quad (A.5)$$

Hence, to obtain the various impedance components one should calculate

$$Z_j = \frac{E(V_j)}{E(V_{in})} \cdot R' \qquad \text{with } j = 2,3,4,5 \quad n = 1,2,3,4,5$$

and the scaling factor $R' = 8.61 \times 10^4$ ohms. (A.6)

Finally, all results should be normalized by

$$I_{in}(\text{expected}) \ / \ I_{in}(\text{measured}). \quad (A.7).$$

```
TEST       24-OCT-80  14:18:09

10 REM Program "TEST" to gather and store data using the Analyser.
20 OPEN "HEXDAT" FOR OUTPUT AS FILE #1
30 DIM #1,P$(160)=80
40 DIM F(13),L$(10),M$(4)
50 DIM C$(10),A$(74),B$(74),D$(74),E$(74),F$(74)
60 DIM G$(74),H$(74),I$(74),J$(74),K$(74)
70 LET N=0
80 PRINT "Please provide instructions for the measurement procedure."
90 PRINT
100 PRINT "You should choose at least THREE frequencies from the set"
110 PRINT "1,2,5,10,20,50,100,200,500,1000,2000,5000 and 10,000 Hertz."
120 PRINT
130 PAUSE(2)
140 PRINT "You will now be asked to type in your choices,"
150 PRINT "ONE AT A TIME, preferably in increasing order of frequency."
160 PRINT
170 PAUSE(2)
180 FOR Z=1 TO 13
190 PRINT "What frequency do you want to use (in Hertz) ";
200 INPUT F(Z)
210 LET N=N+1
```

```
220 PRINT "Do you want to measure at another frequency (Y or N) ";
230 INPUT C$
240 IF C$='N' GO TO 290
250 IF C$='n' GO TO 290
260 IF C$='NO' GO TO 290
270 IF C$='no' GO TO 290
280 NEXT Z
290 LET P$(1)=STR$(N)
300 PRINT
310 PRINT "THUS MEASUREMENTS WILL BE TAKEN AT";N;"FREQUENCIES."
320 PRINT
330 PRINT
340 PRINT "Now please give patient data and experimental conditions."
350 PRINT "What is the name of the patient ";
360 INPUT A$
370 LET P$(2)=A$
380 PRINT "What age is the patient ";
390 INPUT B$
400 LET P$(3)=B$
410 PRINT "What is today's date ";
420 INPUT D$
430 LET P$(4)=D$
440 PRINT "What is the time at the moment ";
```

```
450 INPUT E$
460 LET P$(5)=E$
470 PRINT "What body site is being examined ";
480 INPUT F$
490 LET P$(6)=F$
500 PRINT "What is the skin temperature at this site ";
510 INPUT G$
520 LET P$(7)=G$
530 PRINT "What is the ambient relative humidity of the room ";
540 INPUT H$
550 LET P$(8)=H$
560 PRINT "What p-p current do you want to use (in microamps) ";
570 INPUT I
580 IF I=1 THEN  GO TO 680
590 IF I=2 THEN  GO TO 680
600 IF I=5 THEN  GO TO 680
610 IF I=10 THEN  GO TO 680
620 IF I=20 THEN  GO TO 680
630 PRINT
640 PRINT "THIS ANSWER IS UNACCEPTABLE. You must choose"
650 PRINT "1,2,5,10 or 20 microamps. Please try again."
660 PRINT
670 GO TO 560
```

```
680 LET P$(9)=STR$(I)
690 IF I=1 THEN LET M$="A  1"
700 IF I=2 THEN LET M$="A  2"
710 IF I=5 THEN LET M$="A  5"
720 IF I=10 THEN LET M$="A 10"
730 IF I=20 THEN LET M$="A 20"
740 PRINT
750 PRINT "NOW PLEASE DO THE FOLLOWING."
760 PRINT
770 PRINT "Check that the Analyser is running and that the electrodes"
780 PRINT "are secure. Set the Analyser buttons to some reasonable values,"
790 PRINT "ensure that the 'EXTERNAL CONTROL' button is released,"
800 PRINT "and press 'RESET'. When the measurement is completed,"
810 PRINT "re-engage the 'EXTERNAL CONTROL' button and (firmly)"
820 PRINT "press 'RESET' again (once). That is all."
830 PRINT
840 PRINT "HAVE YOU DONE ALL THIS (type Y when you have) ";
850 INPUT C$
860 PRINT
870 PRINT "Fine. Now stand by."
880 COUT('WAIT',M$,,0)
890 CIN(,A$,,0)
900 FOR Z=1 TO N
```

```
910 GOSUB 1470
920 COUT('WAIT',L$,,0)
930 CIN(,A$,,0)
940 PAUSE(1)
950 COUT('WAIT','G',,0)
960 PRINT
970 PRINT "MEASUREMENT IN PROGRESS FOR FREQUENCY =";F(Z);"HERTZ."
980 CIN('RETRIEVE',A$,74,0)
990 CIN('RETRIEVE',B$,74,0)
1000 CIN('RETRIEVE',D$,74,0)
1010 CIN('RETRIEVE',E$,74,0)
1020 CIN('RETRIEVE',F$,74,0)
1030 CIN('RETRIEVE',G$,74,0)
1040 CIN('RETRIEVE',H$,74,0)
1050 CIN('RETRIEVE',I$,74,0)
1060 CIN('RETRIEVE',J$,74,0)
1070 CIN('RETRIEVE',K$,74,0)
1080 LET A$=SEG$(A$,9,74)
1090 LET B$=SEG$(B$,3,73)
1100 LET D$=SEG$(D$,3,73)
1110 LET E$=SEG$(E$,3,73)
1120 LET F$=SEG$(F$,3,73)
1130 LET G$=SEG$(G$,3,73)
```

```
1140 LET H$=SEG$(H$,3,73)
1150 LET I$=SEG$(I$,3,73)
1160 LET J$=SEG$(J$,3,73)
1170 LET K$=SEG$(K$,3,73)
1180 LET L=(11*Z)
1190 LET P$(L-1)=STR$(F(Z))
1200 LET P$(L)=A$
1210 LET P$(L+1)=B$
1220 LET P$(L+2)=D$
1230 LET P$(L+3)=E$
1240 LET P$(L+4)=F$
1250 LET P$(L+5)=G$
1260 LET P$(L+6)=H$
1270 LET P$(L+7)=I$
1280 LET P$(L+8)=J$
1290 LET P$(L+9)=K$
1300 PRINT
1310 PRINT A$
1320 PRINT B$
1330 PRINT D$
1340 PRINT E$
1350 PRINT F$
1360 PRINT G$
```

```
1370 PRINT H$
1380 PRINT I$
1390 PRINT J$
1400 PRINT K$
1410 NEXT Z
1420 PRINT
1430 PRINT CHR$(7)
1440 PRINT "The requested sequence of measurements has now been completed."
1450 CLOSE
1460 GO TO 1610
1470 IF F(Z)=1 THEN L$="F     1.00"
1480 IF F(Z)=2 THEN L$="F     2.00"
1490 IF F(Z)=5 THEN L$="F     5.00"
1500 IF F(Z)=10 THEN L$="F    10.00"
1510 IF F(Z)=20 THEN L$="F    20.00"
1520 IF F(Z)=50 THEN L$="F    50.00"
1530 IF F(Z)=100 THEN L$="F   100.00"
1540 IF F(Z)=200 THEN L$="F   200.00"
1550 IF F(Z)=500 THEN L$="F   500.00"
1560 IF F(Z)=1000 THEN L$="F  1000.00"
1570 IF F(Z)=2000 THEN L$="F  2000.00"
1580 IF F(Z)=5000 THEN L$="F  5000.00"
1590 IF F(Z)=10000 THEN L$="F 10000.00"
1600 RETURN
1610 END
```

```
HEXDAT    24-OCT-80  14:44:55

10 REM Program "HEXDAT" to print the contents of data file HEXDAT.
20 OPEN "HEXDAT" FOR INPUT AS FILE #1
30 DIM #1,P$(160)=80
40 LET N=VAL(P$(1))
50 PRINT "Contents of data file HEXDAT for measurements"
60 PRINT "taken at ";N;" frequencies:"
70 PRINT
80 FOR I=1 TO (9+(11*N))
90 PRINT P$(I)
100 NEXT I
110 PRINT "End of file contents."
120 CLOSE
130 END

READY
```

MEXMAT 12-MAR-80 15:10:33

Contents of data file MEXMAT for measurements
taken at 2 frequencies:

2
RESISTOR CHAIN + ONE CAPACITOR

10
100

CHANNEL	1	2	3	4	5
DC	F72C 0007	0CA3 0000	0B1F 0005	0FB0 0005	0B5A 0006
FUNDAMENTAL	F11A 0009	0CFC 0006	0EE0 0008	0907 0008	0825 0009
	F7C6 0006	0CB9 0002	0FBC 0003	0BBE 0004	F70A 0003
2ND HARMONIC	F358 0000	F42F FFFD	F169 FFFE	F151 FFFF	0B1D FFFD
	0A75 0004	0BCA 0000	09E1 FFFF	0A35 0001	0BCF 0001
3RD HARMONIC	0BAB 0000	F4BF 0000	F4E5 0001	F7BA 0001	F727 0001
	0C53 0000	F3A8 FFFB	F739 0001	F7E2 0001	F758 0001

```
 DC            F72C 0007   0CA3 0000   0B1F 0005   0FB0 0005   0D5A 0006
 FUNDAMENTAL   F11A 0009   0CFC 0006   0EE0 0008   0907 0009   0925 0009
               F7E6 0006   0C89 0002   0FDC 0003   0BDE 0004   F70A 0003
2ND HARMONIC   F358 0000   F42F FFFD   F169 FFFE   F151 FFFF   081D FFFD
               0A75 0004   08CA 0000   09E1 FFFF   0A35 0001   0BCF 0001
3RD HARMONIC   0BAB 0000   F4BF 0000   F4E5 0001   F7BA 0001   F727 0001
               0C53 0000   F3A8 FFFB   F739 0001   F7E2 0001   F758 0001
4TH HARMONIC   F6DA 0000   F7EF FFFE   0BB2 FFFE   0CBA FFFD   095F FFFE
               F67B 0000   F79A FFFE   F7E1 FFFF   F133 FFFD   F2C0 FFFC
20
CHANNEL              1           2           3           4           5
 DC            B2FD 0007   D760 0002   2068 0003   1849 0004   1C63 0003
 FUNDAMENTAL   E400 0008   186C 0005   1E6E 0007   22D1 0007   25B7 0007
               D8A1 0002   1A28 0000   1A0B 0001   1F8B 0000   BFA0 0005
2ND HARMONIC   BF07 0000   24A5 FFFC   1B7D FFFE   E55C 0001   214A 0000
               2045 0002   1A69 FFFC   E784 FFFE   2867 0001   23F8 0000
3RD HARMONIC   E618 0001   1A10 FFFF   E7F7 0000   2A72 0002   1E0D 0000
               1AED 0001   18B8 FFFC   E34A FFFC   D29F 0001   E28E 0002
4TH HARMONIC   DE68 FFFF   2593 FFFC   19FF FFFF   E3D4 0001   E63B FFFE
               2ABC 0001   E230 FFFD   2432 FFFF   D811 FFFE   DECF FFFF
End of file contents.

READY
```

```
PROC      24-OCT-80  14:37:24

10 REM Program "PROC" to process the data obtained using "TEST".
15 PRINT
16 PRINT "DATA PROCESSING NOW IN PROGRESS. Please stand by."
17 PRINT
20 OPEN "HEXDAT" FOR INPUT AS FILE #1
30 DIM #1,P$(160)=80
40 DIM R$(80),A$(9),A(9)
50 LET N=VAL(P$(1))
60 FOR B=1 TO N
70 LET W=(B-1)*46
80 LET R$=P$((11*B)-1)
90 PRINT VAL(R$)
100 FOR J=1 TO 9
110 LET L$=P$((11*B)+J)
120 LET X=(J-1)*5
130 LET A$=SEG$(L$,14,22)
140 PRINT A$
150 GOSUB 1000
160 PRINT Q
170 LET A$=SEG$(L$,26,34)
180 PRINT A$
```

```
190 GOSUB 1000
200 PRINT Q
210 LET A$=SEG$(L$,38,46)
220 PRINT A$
230 GOSUB 1000
240 PRINT Q
250 LET A$=SEG$(L$,50,58)
260 PRINT A$
270 GOSUB 1000
280 PRINT Q
290 LET A$=SEG$(L$,62,70)
300 PRINT A$
310 GOSUB 1000
320 PRINT Q
330 NEXT J
340 NEXT B
350 CLOSE
355 GO TO 1230
360 PRINT
370 PRINT
380 PRINT
385 PRINT CHR$(7)
390 PRINT "The processing of the data has now been completed."
```

```
400 REM Subroutine to convert hexadecimal data into something intelligible:
1000 FOR K=1 TO 9
1010 LET S$=SEG$(A$,K,K)
1020 LET A(K)=ASC(S$)
1030 IF A(K)<=57 THEN LET A(K)=A(K)-48
1040 IF A(K)>=65 THEN LET A(K)=A(K)-55
1050 NEXT K
1060 IF A(6)>=8 THEN LET S=1
1070 LET E=A(9)+A(8)*16+A(7)*256+A(6)*4096
1080 IF S=1 THEN LET E=(E-65536)
1090 LET S=0
1100 LET E=2^E
1110 IF A(1)>=8 THEN LET S=1
1120 IF S=1 GO TO 1180
1130 LET M=A(1)+A(2)/16+A(3)/256+A(4)/4096
1140 IF S=1 THEN LET M=-M
1150 LET S=0
1160 LET Q=M*E
1170 RETURN
1180 FOR K=1 TO 4
1190 LET A(K)=15-A(K)
1200 NEXT K
1210 LET A(4)=A(4)+1
1220 GO TO 1130
1230 END
```

```
DATA PROCESSING NOW IN PROGRESS. Please stand by.

 100
F72C 0007
-70.625
0CA3 0000
 .789795
0B1F 0005
 22.2422
0FB0 0005
 31.375
0B5A 0006
 53.4063
F11A 0009
-476.75
0CFC 0006
 51.9375
0EE0 0008
 238
0907 0009
 288.875
0925 0009
```

```
0925 0009
 292.625
F7E6 0006
-32.4063
0CB9 0002
 3.13379
0FBC 0003
 7.92969
0BBE 0004
 11.8672
F70A 0003
-4.48047
F358 0000
-.791016
F42F FFFD
-.0923157
F169 FFFE
-.227966
F151 FFFF
-.458862
081D FFFD
 .063385
0A75 0004
```

```
 .063385
0A75 0004
 10.457
08CA 0000
 .549316
09E1 FFFF
 .308716
0A35 0001
 1.27588
0BCF 0001
 1.47607
0BAB 0000
 .729248
F4BF 0000
-.695557
F4E5 0001
-1.38818
F7BA 0001
-1.03418
F727 0001
-1.10596
0C53 0000
 .770264
F3A8 FFFB
```

```
F3A8 FFFB
-.0241089
F739 0001
-1.09717
F7E2 0001
-1.01465
F75B 0001
-1.08203
F6BA 0000
-.571777
F7EF FFFE
-.126038
0BB2 FFFE
 .182739
0CBA FFFD
 .100403
095F FFFE
 .146423
F67B 0000
-.594971
F79A FFFE
-.131226
F7E1 FFFF
```

```
-.131226
F7E1 FFFF
-.253784
F133 FFFD
-.115631
F2C0 FFFC
-.0517578
 20
D2F0 0007
-360.094
D760 0002
-10.1563
2068 0003
 16.2031
1849 0004
 24.2852
1C63 0003
 14.1934
E400 0008
-448
186C 0005
 48.8438
1E6E 0007
```

```
1EGE 0007
 243.438
22D1 0007
 278.531
25B7 0007
 301.719
D0A1 0002
-9.84277
1A2B 0000
 1.63477
1A0B 0001
 3.25537
1FBB 0000
 1.97144
BFA0 0005
-64.75
BF07 0000
-2.06079
24A5 FFFC
 .143143
1B7D FFFE
 .429504
E55C 0001
```

```
 .429504
E55C 0001
-3.33008
214A 0000
 2.08057
2045 0002
 8.06738
1A69 FFFC
 .103165
E784 FFFE
-.382568
2867 0001
 5.05029
23F8 0000
 2.24805
E618 0001
-3.23828
1A10 FFFF
 .814453
E7F7 0000
-1.5022
2A72 0002
 10.6113
1E0D 0000
```

```
 10.6113
1E0D 0000
 1.87817
1AED 0001
 3.36572
1BB8 FFFC
 .0965576
E34A FFFC
-.112152
D29F 0001
-5.67236
E28E 0002
-7.36133
DE68 FFFF
-1.0498
2583 FFFC
 .146774
19FF FFFF
 .812378
E3D4 0001
-3.52148
E63B FFFE
-.402649
2ABC 0001
```

```
-7.36133
DE68 FFFF
-1.0498
2583 FFFC
 .146774
19FF FFFF
 .812378
E3B4 0001
-3.52148
E63B FFFE
-.402649
2ABC 0001
 5.3418
E230 FFFD
-.23291
2432 FFFF
 1.1311
D811 FFFE
-.623962
DECF FFFF
-1.03723

READY
```

APPENDIX B: THE LEAST-SQUARES ESTIMATION OF THE LINEAR ELECTRICAL PROPERTIES OF SKIN

B.1 Fitting (R,X) data pairs to a circle to estimate R_o, R_∞, m and their standard errors

Suppose that we have measured n pairs of rectangular coordinates (R_1,X_1), (R_2,X_2), (R_3,X_3), ..., (R_n,X_n) defining the location of n points on the complex impedance plane. Then if the Cole equation (Fig. 4.2.II) is obeyed, all these points would lie on a particular circle if errors were not present in the individual measurements of R and X (see Section 4.2). Indeed, we would find that the equation

$$O = a + bR + cX + R^2 + X^2 \qquad (B.1.1)$$

was obeyed with exactly the same values of a, b and c for each (R, X) data pair, and these pairs would define points lying on a circle having its centre at (R_c,X_c) where

$$R_c = -\tfrac{1}{2}b \qquad (B.1.2)$$

$$X_c = -\tfrac{1}{2}c \qquad (B.1.3)$$

and having a radius

$$r = \sqrt{(\frac{b}{2})^2 + (\frac{c}{2})^2 - a} \qquad (B.1.4).$$

Because however there are errors in the measurements of R and X, we can only obtain estimates of the quantities a, b and c. According to the principle of least squares (see e.g. Bevington, 1969), we obtain the best estimates A, B and C of these quantities when

$$S = \sum_{i=1}^{n} [O - A - BR_i - CX_i - R_i^2 - X_i^2] = \text{minimum} \qquad (B.1.5)$$

We can therefore reduce the problem of finding the best-fit circle by the method of least squares to just a special case of partial regression on two independent variables, since (B.1.1) can be written as

$$y = a + b_1 x_1 + b_2 x_2 \qquad \text{(B.1.6)}$$

by putting

$$x_1 = R \qquad \text{(B.1.7)}$$

$$x_2 = X \qquad \text{(B.1.8)}$$

and $$y = -(R^2 + X^2) \qquad \text{(B.1.9)}$$

and these substitutions reduce (B.1.5) to

$$S = \sum_{i=1}^{n} [\, y_i - A - B\, x_{1i} - C\, x_{2i}] = \text{minimum} \qquad \text{(B.1.10)}$$

Consequently by solving (B.1.10) using standard methods (illustrated by e.g. Bevington, 1969), we find that the best (i.e. least-squares) estimates of a, b and c are A, B and C where (compare e.g. Rektorys, 1969, pps. 1297 - 1299)

$$B = (B4.\, B6 - B2.\, B5)/D \qquad \text{(B.1.11)}$$

$$C = (B4.\, B5 - B1.\, B6)/D \qquad \text{(B.1.12)}$$

and $$A = (-B.\, A1 - C.\, A2 - A3)/n \qquad \text{(B.1.13)}$$

having calculated

$$A1 = \sum_{i=1}^{n} R_i \qquad \text{(B.1.14)}$$

$$A2 = \sum_{i=1}^{n} X_i \qquad \text{(B.1.15)}$$

$$A3 = \sum_{i=1}^{n} (R_i^2 + X_i^2) \qquad \text{(B.1.16)}$$

$$A4 = \sum_{i=1}^{n} (R_i^2) \qquad \text{(B.1.17)}$$

$$A5 = \sum_{i=1}^{n} (X_i^2) \qquad \text{(B.1.18)}$$

$$A6 = \sum_{i=1}^{n} (R_i^2 + X_i^2)^2 \qquad \text{(B.1.19)}$$

$$A7 = \sum_{i=1}^{n} R_i \cdot X_i \qquad \text{(B.1.20)}$$

$$A8 = \sum_{i=1}^{n} R_i (R_i^2 + X_i^2) \qquad \text{(B.1.21)}$$

$$A9 = \sum_{i=1}^{n} X_i (R_i^2 + X_i^2) \qquad \text{(B.1.22)}$$

$$B1 = A4 - (A1)^2/n \qquad \text{(B.1.23)}$$

$$B2 = A5 - (A2)^2/n \qquad \text{(B.1.24)}$$

$$B3 = A6 - (A3)^2/n \qquad \text{(B.1.25)}$$

$$B4 = A7 - (A1.\ A2)/n \qquad (B.1.26)$$

$$B5 = A8 - (A1.\ A3)/n \qquad (B.1.27)$$

$$B6 = A9 - (A2.\ A3)/n \qquad (B.1.28)$$

and $$D = (B1.\ B2) - (B4)^2 \qquad (B.1.29)$$

The residual sum of squares is

$$S_o = B3 + B.B5 + C.B6 \qquad (B.1.30)$$

and there are (n-3) degrees of freedom.

Furthermore, denoting the standard error of a quantity x by S(x) and using

$$E = (S_o/(n-3))^{\frac{1}{2}} \qquad (B.1.31)$$

we have

$$S(A) = E\ ((A4.\ A5 - (A7)^2)/(n.D))^{\frac{1}{2}} \qquad (B.1.32)$$

$$S(B) = E\ (B2/D)^{\frac{1}{2}} \qquad (B.1.33)$$

and $$S(C) = E\ (B1/D)^{\frac{1}{2}} \qquad (B.1.34)$$

Finally, writing the best (least-squares) estimate of r as r*, we may find s(r*) where

$$(r^*)^2 = (\frac{B}{2})^2 + (\frac{C}{2})^2 - A \qquad (B.1.35)$$
cf. (B.1.4)

since from the theory of errors

$$S(x^2) = 2x\ S(x) \qquad (B.1.36)$$

$$S(\frac{x}{2}) = \tfrac{1}{2}S(x) \qquad (B.1.37)$$

and $$S(x \pm y) = [(S(x))^2 + (s(y))^2]^{\frac{1}{2}} \qquad (B.1.38)$$

$$\text{so} \quad S(r^*) = S\left[(r^*)^2\right]/2r^*$$

$$= \frac{\left[\left(\frac{B}{2}S(B)\right)^2 + \left(\frac{C}{2}S(C)\right)^2 + (S(A))^2\right]^{\frac{1}{2}}}{2r^*} \qquad \text{(B.1.39)}$$

We are now therefore able to estimate that the circle which best describes our n data pairs has its centre at (R_c, X_c) where

$$R_c = -\tfrac{1}{2}B \pm \tfrac{1}{2}S(B) \qquad \text{(B.1.40)}$$

$$X_c = -\tfrac{1}{2}C \pm \tfrac{1}{2}S(C) \qquad \text{(B.1.41)}$$

and has a radius

$$r^* = \sqrt{\left(\frac{B}{2}\right)^2 + \left(\frac{C}{2}\right)^2 - A} \pm S(r^*) \qquad \text{(B.1.42)}$$

However, although we are now able to calculate estimates of the coordinates of the centre of the circle, the radius of the circle, and their respective standard errors, these are not the quantities of most direct applicability in least-squares-best-fitting a Cole equation to the data pairs. We actually want estimates not of these quantities but of R_o, R_∞, m and their standard errors. Consequently we will make use of the simple correspondence which exists between the set of quantities we have, and the set of quantities we want. Figure B.1.I illustrates this correspondence (compare Section 4.2).

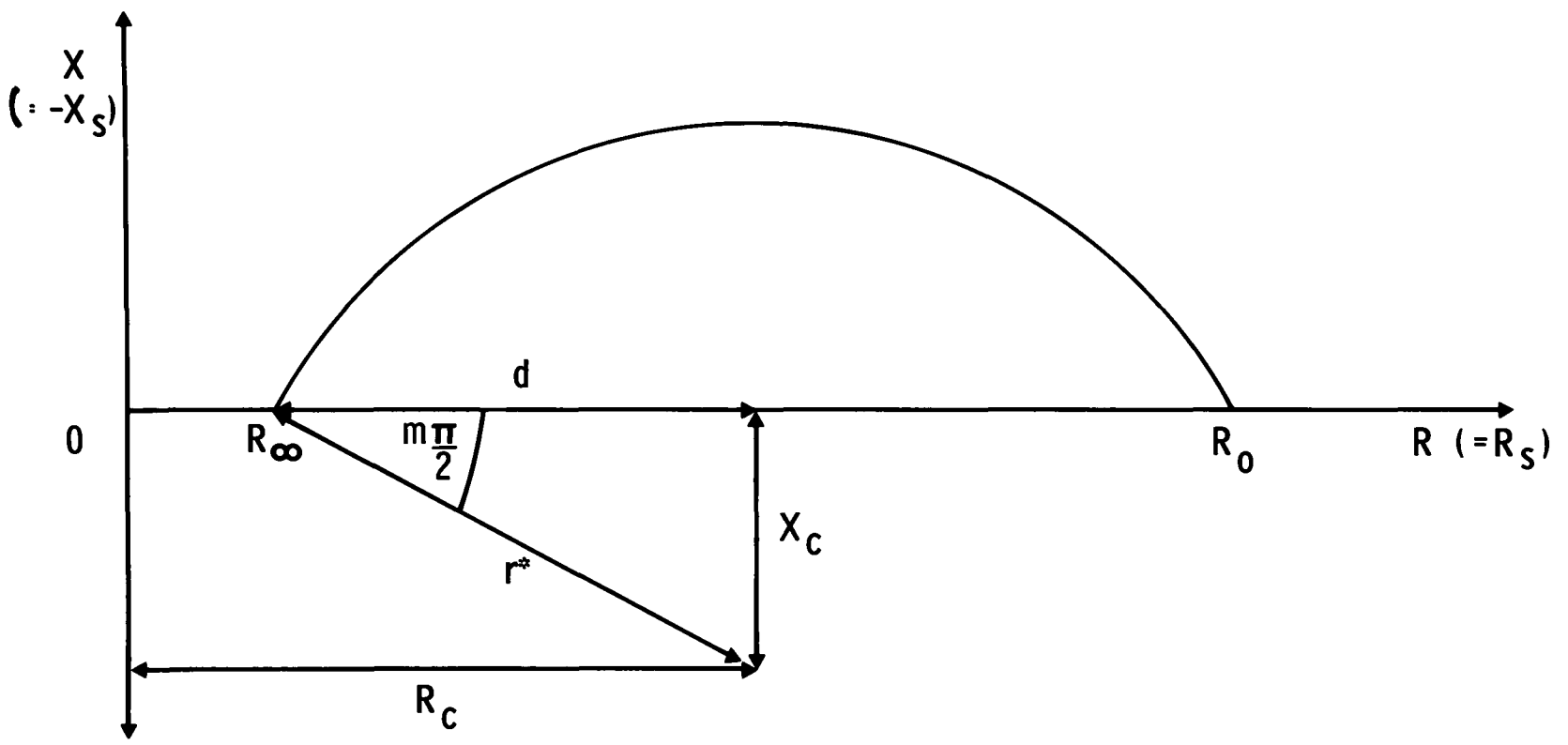

Fig. B.1.I

We define

$$d = \sqrt{(r^*)^2 - (X_c)^2} \qquad \text{(B.1.43)}$$

and it follows that

$$S(d) = \frac{S(d^2)}{2d} = \frac{\sqrt{[2r^*\, S(r^*)]^2 + [2X_c S(X_c)]^2}}{2d} \qquad \text{(B.1.44)}$$

Then

$$R_o = (R_c + d) \pm S(R_o) \qquad \text{(B.1.45)}$$

and

$$R_\infty = (R_c - d) \pm S(R_\infty) \qquad \text{(B.1.46)}$$

where

$$S(R_o) = S(R_c + d) = \sqrt{[S(R_c)]^2 + [S(d)]^2}$$

$$= S(R_\infty)$$

Furthermore let

$$\tan (m\pi/2) = X_c/d \qquad \text{(B.1.48)}$$

then we immediately have

$$m = \frac{2}{\pi} \arctan (X_c/d) \qquad \text{(B.1.49)}$$

To derive $S(m)$, consider that for a pair of quantities $y \pm S(y)$ and $x \pm S(x)$, $S[f(x,y)]$, where f is some function, is given by

$$(S[f(x,y)])^2 = (\frac{\partial f}{\partial x})^2 [s(x)]^2 + (\frac{\partial f}{\partial y})^2 [s(y)]^2 \qquad \text{(B.1.50)}$$

Consequently for $f(x, y) = (2/\pi) \arctan (y/x)$, we set $q = (y/x)$, whereupon

$$(\frac{\partial f}{\partial x})_y = \frac{2}{\pi} \frac{d}{dq} (\arctan q) (\frac{\partial q}{\partial x})_y = -\frac{2}{\pi}[\frac{y}{x^2 + y^2}] \qquad \text{(B.1.51)}$$

and

$$(\frac{\partial f}{\partial y})_x = \frac{2}{\pi} \frac{d}{dq} (\arctan q) (\frac{\partial q}{\partial y})_x = \frac{2}{\pi}[\frac{x}{x^2 + y^2}] \qquad \text{(B.1.52)}$$

so

$$[S(m)]^2 = (\frac{2}{\pi} [\frac{X_c}{X_c^2 + d^2}])^2 [S(X_c)]^2 \qquad \text{(B.1.53)}$$

$$= (\frac{2}{\pi} [\frac{d}{X_c^2 + d^2}])^2 [S(d)]^2$$

Which concludes our procedures for obtaining least-squares-best-fit estimates of R_o, R_∞, m and their standard errors from a set of n measurements (at different stimulating frequencies) of a complex impedance which obeys the Cole equation.

These procedures, like most in this Appendix, are so far as I know original, and therefore have been described in some detail.

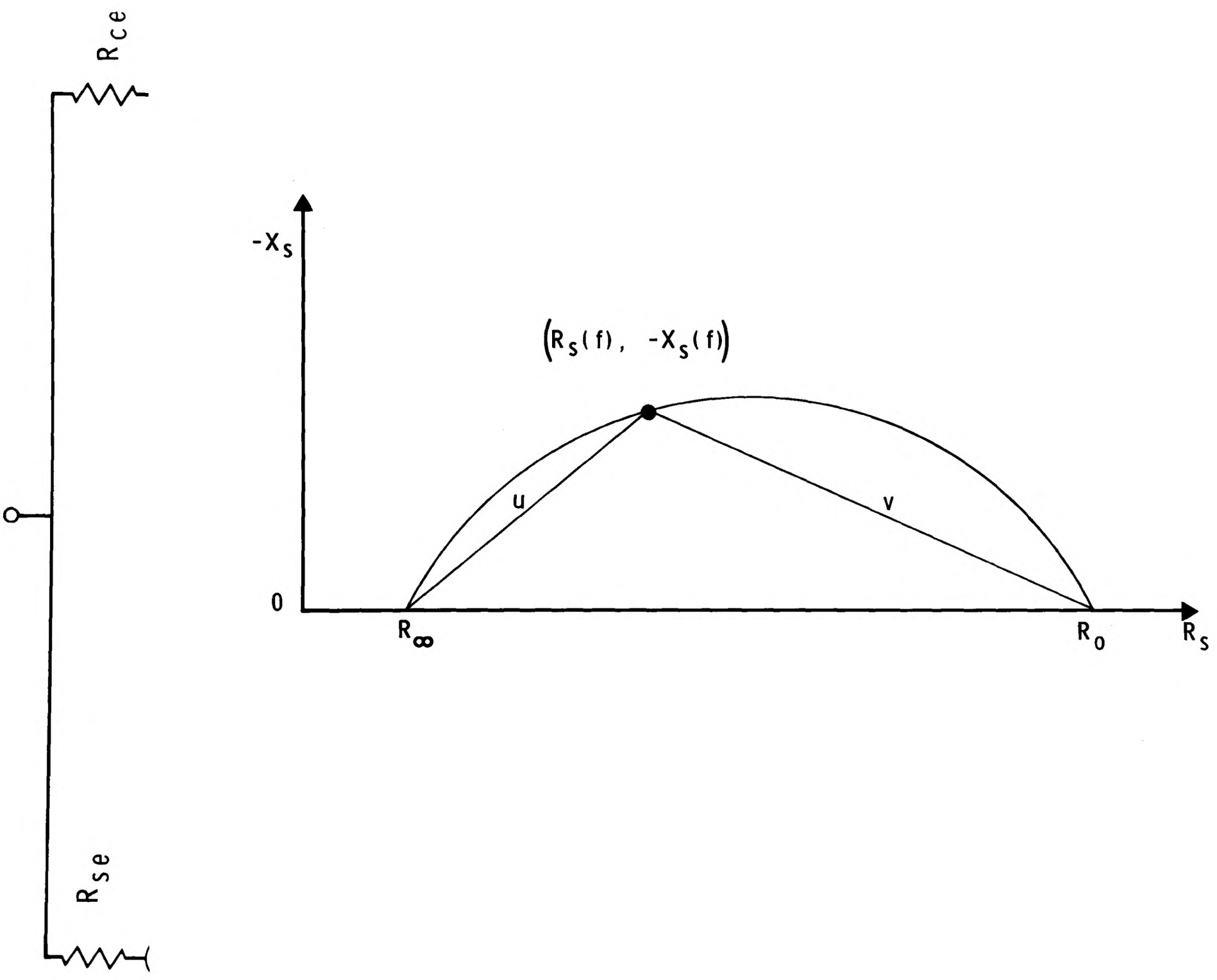

Fig. B.2.I

B.2 Estimating τ_p and its standard error

Sections 4.2, 9.5 and 11.2 point out that the complex impedance of skin obeys the Cole equation

$$Z = R_\infty + \frac{R_o - R_\infty}{1 + (j\omega\tau_p)^{1-m}} \qquad (B.2.1)$$

and in subappendix B1 we dealt with the problem of estimating the values of R_o, R_∞ and m which will best represent a particular set of experimental data. We are still however left with the problem of estimating the most suitable value of τ_p.

Now the Cole equation (B.2.1) predicts that complex impedance defined by the rectangular coordinates $(R_s(f), -X_s(f))$ will move as a function of frequency $f = \omega/2\pi$ along a minor arc of a circle on the complex impedance plane (see Section 4.2), and indeed we have just made extensive use of this geometry in subappendix B.1. It is however also the key to a solution of our present problem, now that we know R_o and R_∞.

This is so because following Cole (1928) and Cole and Cole (1941), we can now define and calculate the value of two chords u and v according to

$$u = \sqrt{[R_s(f) - R_\infty]^2 + [X_s(f)]^2} \qquad (B.2.3)$$

and

$$v = \sqrt{[R_o - R_s(f)]^2 + [X_s(f)]^2} \qquad (B.2.4)$$

as illustrated by Fig. B.2.I.

We may recall that at the point of maximum (negative) resistance, $\omega\tau_p = 1$, and $\omega = \omega_p$ by definition (see Section 4.2). Consequently we have for this point

$$\tau_p = 1/\omega_p = 1/(2\pi f_p) \qquad (B.2.5)$$

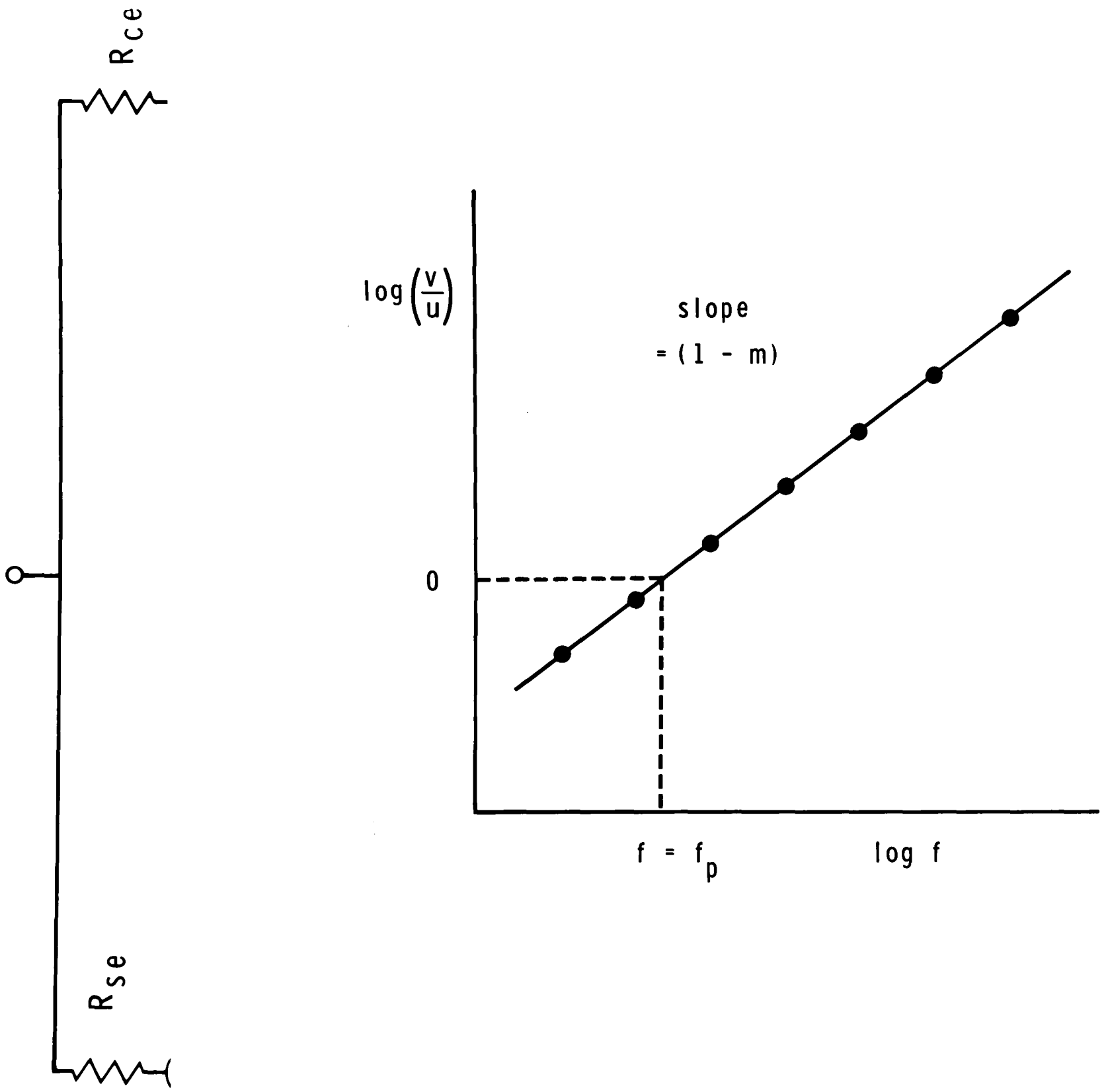

Fig. B.2.II

and we also know, from geometry, that this point for which $f = f_p$ will produce $u = v$. We can therefore use this equality of the chords as a sensitive indicator of the position of maximum reactance, and thus of that frequency f_p which must be substituted into (B.2.5) to derive our estimate of τ_p.

This apparently rather clumsy approach is in fact more elegant and accurate than, for example, some procedure involving finding a tangent to the circle, just because it happens that the chords we have defined are very directly related to frequency by their ratio

$$\left(\frac{v}{u}\right) = (2\pi f \tau_p)^{1-m} \qquad \text{(B.2.6)}$$

which of course follows from the Cole equation (B.2.1) (cf. Cole and Cole, 1941, p.346).

Now (B.2.6) suggests that we could estimate τ_p from just a single point on the complex impedance locus, since it rearranges to give

$$\tau_p = \frac{1}{2\pi f}\left(\frac{v}{u}\right)^{\frac{1}{1-m}} \qquad \text{(B.2.7)}$$

but to obtain a rather better estimate of τ_p we will instead make use of ALL the data points and plot them on a graph of log (v/u) against log f, which (B.2.6) predicts should be a straight line of slope (1-m), such as is illustrated by Fig. B.2.II. We may then use the graph to estimate the frequency at which log (v/u) = 0, i.e. u = v. This frequency is of course f_p, and we can then obtain τ_p directly from (B.2.5).

Let us now consider this procedure in more detail. From (B.2.6) it follows that

$$\log\left(\frac{v}{u}\right) = (1-m)\log(2\pi\tau_p) + (1-m)\log f \qquad \text{(B.2.8)}$$

which is a straight line

$$y = a + bx \qquad \text{(B.2.9)}$$

writing

$$y = \log (v/u) \qquad \text{(B.2.10)}$$

$$a = (1-m) \log (2\pi\tau_p) \qquad \text{(B.2.11)}$$

$$b = (1-m) \qquad \text{(B.2.12)}$$

and $$x = \log f \qquad \text{(B.2.13)}$$

this being the reason for plotting graphs such as Fig. B.2.II, and indeed suggesting that instead of physically plotting such graphs and fitting lines by eye, it is possible and preferable to calculate by linear regression a least-squares-best-fit straight line to represent the data, once they are expressed in the form (B.2.8). The calculation produces least-squares-best-fit estimates of a and b, which we will write as a* and b*, and these estimates may then be substituted into (B.2.9) to give our least-squares-best-fit straight line

$$y = a^* + b^*x \qquad \text{(B.2.14)}$$

Since from (B.2.10) $y = o$ when $f = f_p$, we know that this point on the line obeys

$$x = (-a^*/b^*) \qquad \text{(B.2.15)}$$

so using (B.2.13) we have an estimate of f_p as

$$f_p = \text{antilog } (-a^*/b^*) \qquad \text{(B.2.16)}$$

and a corresponding estimate of τ_p from (B.2.5).

In practice however the points we are fitting the straight line to are not known with equal accuracy. Even if all the (R, $\bar{X}$) data pairs are measured to the same accuracy in their R and X coordinates, their transformation into measures of the logarithmic chord ratio will mean that the values of log (v/u) near zero are likely to be the most accurate. Consequently arbitrary but usually reasonable weighting factors were used, defined by

$$w = \text{antilog}\ \left[-(\text{the greater of the two values } \frac{v}{u} \text{ and } \frac{u}{v})\right] \qquad \text{(B.2.17)}$$

in a **weighted** linear regression calculated according to the equations which follow.

The value of b* was obtained by calculating

$$C3 = \sum_{i=1}^{n} w_i \qquad \text{(B.2.18)}$$

$$C4 = \sum_{i=1}^{n} w_i x_i \qquad \text{(B.2.19)}$$

$$C5 = \sum_{i=1}^{n} w_i y_i \qquad \text{(B.2.20)}$$

$$C6 = \sum_{i=1}^{n} w_i x_i y_i \qquad \text{(B.2.21)}$$

$$C7 = \sum_{i=1}^{n} w_i x_i^2 \qquad \text{(B.2.22)}$$

$$C8 = \sum_{i=1}^{n} w_i y_i^2 \qquad \text{(B.2.23)}$$

then

$$b^* = \frac{C6 - (C4.C5)/C3}{C7 - (C4.C5)/C3} \qquad \text{(B.2.24)}$$

Alternatively, rather than calculating b* to estimate m using (B.2.12), b* can simply be assumed to equal (1-m) where m is obtained from the Z locus arc fit as described in subappendix B.1.

The value of a* was then obtained from

$$a^* = (C5 - b^*.C4)/C3 \qquad (B.2.25)$$

The residual sum of squares, S_o, is given by

$$S_o = C8 - \frac{(C5)^2}{C3} - b^* (C6 - C4.C5/C3) \qquad (B.2.26)$$

and then defining

$$S = [\, S_o/(n-2)\,]^{\frac{1}{2}} \qquad (B.2.27)$$

since there are (n-2) degrees of freedom for n points to be fitted, we find that the standard errors of the estimates of a* and b* are respectively

$$S(a^*) = S\,[(C7/C3)/(C7 - (C4)^2/C3)]^{\frac{1}{2}} \qquad (B.2.28)$$

and

$$S(b^*) = S\,[C7 - (C4)^2/C3\,]^{-\frac{1}{2}} \qquad (B.2.29)$$

Now because we carried out a non-linear (in fact logarithmic) transformation of variables, equation (B.2.8), before calculating the regression on the data, we have found the least-squares-best-fit values in the transformed variable space, not the ones we are really interested in. Consequently when we make an inverse transformation such as (B.2.16) we will not necessarily obtain the least-square-best-fit value of f_p. Nor will the standard errors be directly transferable either. This type of problem is very common and the usual way of dealing with it is to apply iterative correction (see for example Southworth and Dellezuw, 1965, p.474 ff).

In our application however the errors introduced by not applying such corrections are very small indeed, and so to save computing time we decided to treat them as negligible.

Our estimates of f_p were therefore obtained directly from (B.2.16) and asymmetrical "pseudo standard errors" were calculated from

$$+PSE = \text{antilog}\,(-[a^*-s(a^*)]/b^*) - \text{antilog}\,(-a^*/b^*) \qquad (B.2.30)$$

and

$$-PSE = \text{antilog}\,(-a^*/b^*) - \text{antilog}\,(-[a^*+s(a^*)]/b^*) \qquad (B.2.31)$$

Finally, we may also derive another estimate of m, which on the basis of (B.2.12) is given by

$$m = 1 - b^* \qquad (B.2.32)$$

with a standard error

$$s(m) = s(b^*) \qquad (B.2.33).$$

B.3 Deriving the locus of complex permittivity with the effect of D.C. conductance subtracted off

We may write the complex conductance of the skin being measured in the form

$$\sigma^* = \sigma_o + \sigma^*_p \qquad \text{(B.3.1)}$$

where σ_o is the D.C. conductance of the skin and σ^*_p is its complex conductance, processed such that the effect of D.C. conductance has been subtracted off.

We may also write

$$\sigma^*_p = \sigma'_p + j\sigma''_p = j\omega\varepsilon^*_p = \omega\varepsilon''_p + j\omega\varepsilon'_p \qquad \text{(B.3.2)}$$

where ε^*_p is the complex permittivity of the skin processed such that the effect of D.C. conductance has been subtracted off, but not scaled to absolute units because (in vivo) we do not know the effective thickness of the material we are measuring. This does not matter very much however because we are primarily interested in the shape of the ε^*_p locus, not in its absolute magnitude.

Making use of (B.3.1), (B.3.2), the general relationships of Section 3.3 and the least-squares-best-fit estimate of R_o obtained by the procedures of subappendix B.1, we may therefore calculate ε'_p and ε''_p from our measurements of equivalent series resistance R_s, and equivalent series reactance, X_s, according to

$$\varepsilon'_p = \frac{1}{\omega} \frac{X_s}{(R_s^2 + X_s^2)} \qquad \text{(B.3.3)}$$

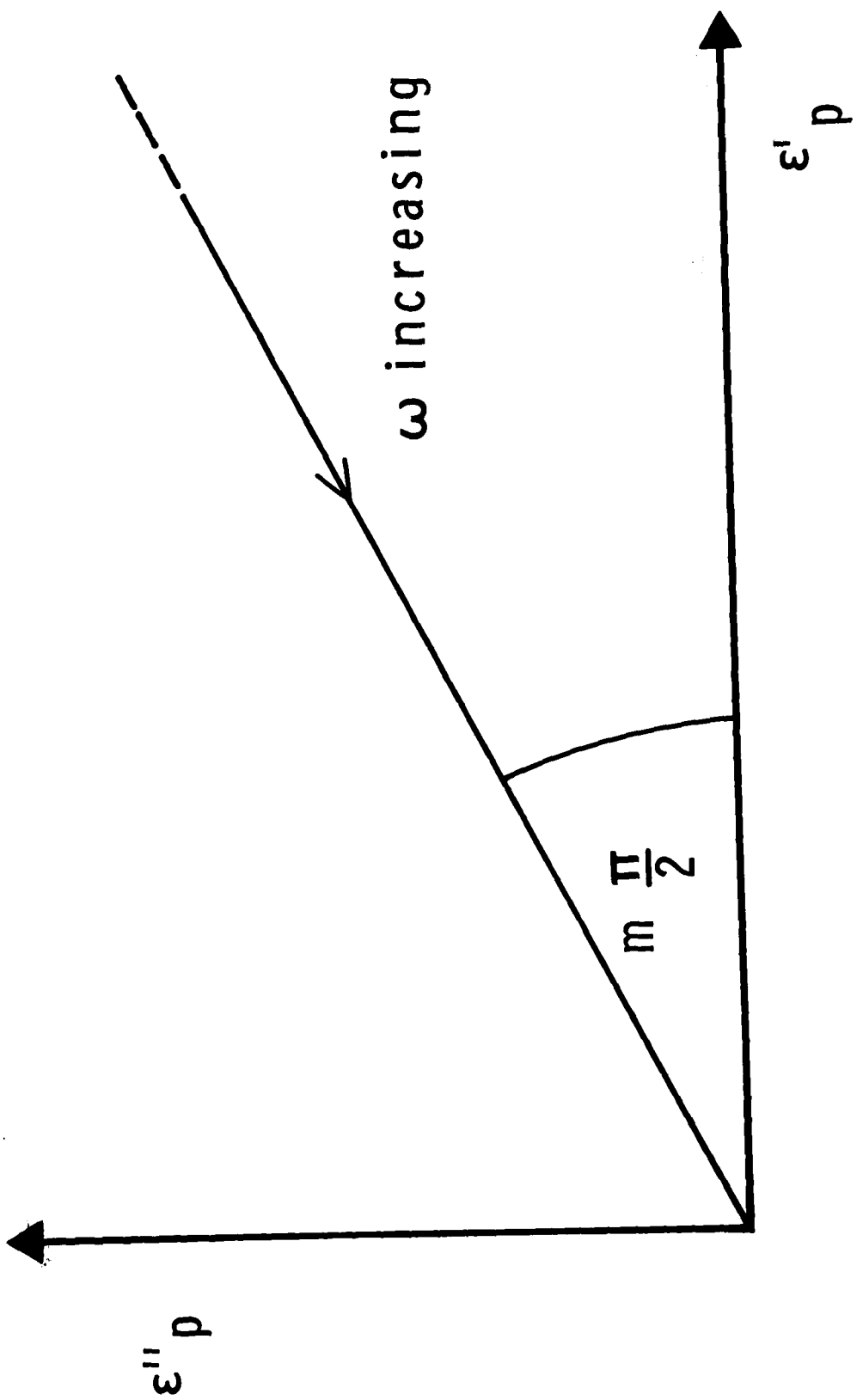

Fig. B.3.I

$$\text{and} \quad \varepsilon''_p = \frac{1}{\omega}\left[\frac{R_s}{(R_s^2 + X_s^2)} - \frac{1}{R_o}\right] \qquad \text{(B.3.4)}$$

It is notable that plotting ε'_p and ε''_p as the rectangular coordinates of the ε^*_p locus usually produces a straight line intercepting the origin to within experimental error (see for example Figures 9.2.b.II and 9.3.c.I - III). This is exactly what would be expected if skin obeys the Cole complex impedance equation with a value of R_∞ which is negligibly small (see subsection 11.6.a), and we would then expect the slope of line to enable us to estimate m (Fig. B.3.I).

Such estimates of m were therefore made as follows. From the (R_s, X_s) data pairs, $(\varepsilon'_p, \varepsilon''_p)$ pairs were calculated defining points on the ε^* plane, and a weighted least-squares linear regression using

$$y = \varepsilon''_p \qquad \text{(B.3.5)}$$

$$a = \varepsilon''_p \ (\varepsilon'_p = 0) \qquad \text{(B.3.6)}$$

$$b = \arctan(m\pi/2) \qquad \text{(B.3.7)}$$

$$x = \varepsilon'_p \qquad \text{(B.3.8)}$$

and then (B.2.18) to (B.2.29), with new empirical weighting factors w_i defined by

$$w_i = (\text{old } w_i \text{ of (B.2.17)})^2 \times (R_o - R_i)^3 \qquad \text{(B.3.9)}$$

the cubic term serving to emphasize the contribution of those ε^*_p points the calculation of the position of which was less affected by any inaccuracies in the estimated value of R_o.

We then finally obtain our estimate of m from

$$m = \frac{2}{\pi}\tan(b^*) \qquad \text{(B.3.10)}$$

and comparing this with (B.1.49) we obtain s(m) from an appropriate version of (B.1.53).

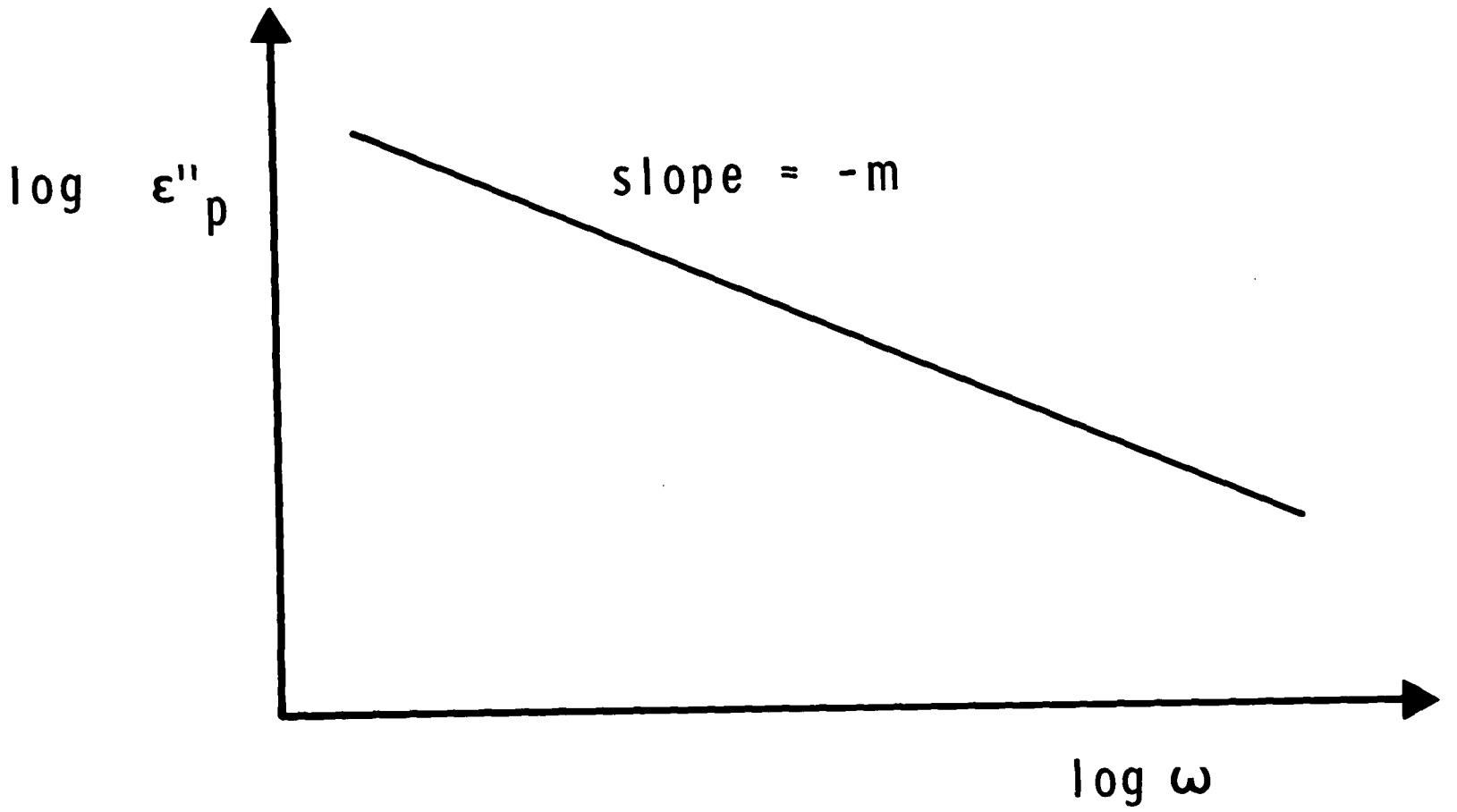

Fig. B.4.I

B.4 Deriving as much information as possible about the polarization impedance

Subappendix B.3 noted that when the effect of D.C. conductance is subtracted off we found that the locus of the thus-processed complex permittivity on the complex permittivity plane was a straight line to within experimental error.

This result implies on the basis of Section 4.2 that over the frequency range we have investigated the skin can be assumed to behave like a polarization impedance in parallel with a D.C. conductance. Consequently when we subtract off the effect of the D.C. conductance, we are examining the properties of the polarization impedance alone.

These properties must therefore be reflected in the straight-line processed complex permittivity locus, which on the basis of the theories discussed in Sections 11.8 and 11.9 would seem to be described exactly or at least approximately by

$$(\varepsilon^*_p-\varepsilon_\infty)/(\varepsilon_s-\varepsilon_\infty) = \frac{(1-\alpha)\pi}{\sin(\alpha\pi)}(j\omega\tau_2)^{\alpha-1}, \quad o < \alpha < 1 \qquad \text{(B.4.1)}$$

with $\alpha = 1-m$ and ε_∞ apparently negligible. We want to apply this fact to try and derive values of τ_2, ε_s, or some other quantities with which to characterize the polarization impedance in the most fundamental terms possible from the data.

Now comparing (B.4.1) with (11.8.c.6), we see (11.8.c.9) implies that

$$\log \varepsilon''_p = \log\left[(\varepsilon_s-\varepsilon_\infty)\left(m\tfrac{\pi}{2}\right)\sec\left(\tfrac{m\pi}{2}\right)(\tau_2)^{-m}\right] - m \log \omega \qquad \text{(B.4.2)}$$

and so suitably plotting the values we obtained from (B.3.4) in the last subappendix will produce a straight-line graph, from which we can obtain yet another estimate of m (see Fig. B.4.I) and also some information about the polarization impedance.

We carry out a weighted least-squares linear regression using

$$y = \log \varepsilon''_p \qquad \text{(B.4.3)}$$

$$a = \log [(\varepsilon_s - \varepsilon_\infty)(m\pi/2) \sec (m\pi/2)(\tau_2)^{-m}] \qquad \text{(B.4.4)}$$

$$b = -m \qquad \text{(B.4.5)}$$

$$x = \log \omega = \log (2\pi f) \qquad \text{(B.4.6)}$$

and then (B.2.18) to (B.2.29) with weights defined by (B.3.9).

We may then obtain estimates of

$$m = -b^* \qquad \text{(B.4.7)}$$

$$s(m) = s(b^*) \qquad \text{(B.4.8)}$$

and a quantity

$$U = (\varepsilon_s - \varepsilon_\infty)(\tau_2)^{-m}$$

$$= (2/m\pi) \cos (m\pi/2) \text{ antilog } (a^*) \qquad \text{(B.4.9)}$$

with its pseudo-standard errors defined in a way similar to that used in (B.2.30) and (B.2.31).

This so far as I can tell is the maximum amount of information which can be extracted from the data available. I do not believe that τ_2 or $(\varepsilon_s - \varepsilon_\infty)$ or ε_s can be derived independently from just these (R,X) measurements, because if equation (B.4.1) does indeed apply then the information in the permittivity locus is (only)

$$\varepsilon^*_p = \varepsilon_\infty + \frac{m\pi}{\sin(m\pi)} U (j\omega)^{-m} \qquad \text{(B.4.10)}$$

and we know m already.

At least however the quantity U does describe the condition of the polarization impedance without this being obscured by the effects of D.C. conduction.

B.5 Improving the estimate of m

Let us call the estimate of m derived from the least-squares-fit of a minor arc of a circle on the complex impedance plane M1, the estimate derived from the Cole-Cole log (v/u) plot M2, the estimate derived from the ε^*_p locus M3, and the estimate derived from the log ε''_p plot M4. These are described in subappendices B1 to B4 respectively.

If skin obeys a Cole equation having R_∞ negligible in comparison with R_o, then we would expect that the estimates M1 to M4 would not be significantly different from each other (freak interactions of data values and weighting procedures excluded!). We have therefore tested these estimates to assess the significance of the differences between them.

In calculating M1 we used (n-3) degrees of freedom. In calculating M2, M3 and M4 we in each case used (n-2) degrees of freedom. Consequently to assess the significance of the difference between M1 and one of the other estimates M_i, we calculate the t-value

$$t = \frac{|M1 - M_i|}{\sqrt{[S(M1)]^2 + [S(M_i)]^2}} \qquad (B.5.1)$$

and look up in statistical tables the significance of this value for (2n-5) degrees of freedom.

Since the P-value corresponding to this t-value has always indicated that the differences between the estimates can indeed be neglected, it is worthwhile to use the four estimates to calculate a better estimate, M.

To do this it is accepted practice to give to the ith estimate M_i a weight w_i proportional to the reciprocal of the square of its standard error. Then the weighted mean estimate is

$$M = \sum_{i}^{4} w_i M_i \qquad \text{(B.5.2)}$$

with a standard error

$$S(M) = ([\sum_{i}^{4} w_i (M_i - M)^2]/[3\sum_{i}^{4} w_i])^{\frac{1}{2}} \qquad \text{(B.5.3).}$$

B.6 Coefficients of determination of the fitted loci

The "goodness-of-fit" of the data to the geometrical forms (circle and line) we have assumed best describe their loci can be quantified in terms of the coefficient of determination. An introduction to the concept is given for example by Draper and Smith (1966), and it is convenient in practice since a value of unity indicates a perfect fit, with smaller values indicating poorer fits.

Let us consider firstly the rather simpler case of linear regression, which we employed in subappendix B.2 to B.4 inclusive. Linear regression assumes

$$y = a + bx \qquad \text{(B.6.1)}$$

$$\text{so} \quad x = (y/b) - (a/b) \qquad \text{(B.6.2)}$$

$$\text{or} \quad x = a' + b'y \qquad \text{(B.6.3)}$$

and by comparing coefficients

$$a' = -a/b \qquad \text{(B.6.4)}$$

$$\text{and} \quad b' = 1/b \qquad \text{(B.6.5)}$$

Consequently we can use the product b b' as the coefficient of determination of linear regression. On the basis of equations (B.7.18) to (B.7.29) then, using them as they stand to calculate b and exchanging x for y and vice versa to obtain b', we find that the product b b' can be calculated directly from

$$b\,b' = \frac{(C6 - C4.C5/C3)^2}{(C7 - (C4)^2/C3)(C8 - (C5)^2/C3)} \qquad \text{(B.6.6)}$$

Similarly, for the multiple regression case with two independent variables, which we employed in subappendix B.1 and which assumes

$$y = a + b_1x_1 + b_2x_2 \tag{B.6.7}$$

we can extend the argument as follows.

Let

$$x_1 = (-a/b_1) + (y/b_1) - (b_2/b_1)\, x_2 \tag{B.6.8}$$

$$= a' + b_1'y + b_2'x_2 \tag{B.6.8}$$

and

$$x_2 = (-a/b_2) + (y/b_2) - (b_1/b_2)x_1$$

$$= a'' + b_1''y + b_2''x_2 \tag{B.6.9}$$

Then by comparing coefficients

$$a' = (-a/b_1) \tag{B.6.10}$$

$$b_1' = 1/b_1 \tag{B.6.11}$$

$$b_2 = (-b_2/b_1) \tag{B.6.12}$$

$$a'' = (-a/b_2) \tag{B.6.13}$$

$$b_1'' = 1/b_2 \tag{B.6.14}$$

$$b_2'' = (-b_1/b_2) \tag{B.6.15}$$

and so we choose to use $b_1\ b_1'$ as the coefficient of determination of multiple regression with two independent variables. By considering equations (B.1.11), (B.1.14) to (B.1.29) and also (B.6.8) and (B.6.9) we may then easily deduce that this coefficient may be calculated directly from

$$b_1 b_1' = \frac{(B4.B6 - B2.B5)^2}{(B1.B2 - (B4)^2)\ (B2.B3 - (B6)^2)} \qquad (B.6.16)$$

APPENDIX C: PROGRAM "RESULTS" AND PROGRAM "CLINPLOT"

(Program RESULTS begins on page 586 and program CLINPLOT on page 591).

```
10 REM PROGRAM "RESULTS" TO CALCULATE THE LEAST-SQUARES BEST-FIT
20 REM PARAMETERS DESCRIBING THE LINEAR ELECTRICAL PROPERTIES OF SKIN.
30 FILES CIRCDATA
40 LET A1 = A2 = A3 = A4 = A5 = A6 = A7 = A8 = A9 = S = Y = 0
 50 DIM F[20], W[20], R[20], X[20], U[20], V[20], Q[20], K[20], T[20]
60 DIM A$[40], H$[40], I$[40], J$[40], K$[40]
 70 DIM A[20], B[20], P[30, 6]
 80 FOR I = 1 TO 30
 90 FOR J = 1 TO 6
100 READ P[I, J]
110 NEXT J
120 NEXT I
130 REM FILE THE TEST CONDITIONS:
140 FOR I = 1 TO 8
150 READ A$
160 PRINT %1; A$
170 NEXT I
180 REM NOW CALCULATE THE CIRCULAR ARC IMPEDANCE LOCUS
190 REM WHICH BEST DESCRIBES THE N DATA PAIRS (R,X).
200 REM
210 REM INPUT TOTAL NO. OF DATA POINTS TO BE FITTED
220 READ N
230 REM THE VALUES OF F (= FREQUENCY) DO NOT AFFECT
240 REM THE CALCULATION OF THE BEST-FIT CIRCULAR ARC.
250 REM NOW INPUT THE DATA TO BE FITTED:
260 FOR I = 1 TO N
270 READ F[I], R[I], X[I]
280 NEXT I
290 REM FIND THE MAXIMUM X VALUE AND SET Y = X(MAX):
300 FOR I = 1 TO N
310 LET Y1 = X[I] MAX Y
320 LET Y = Y1
330 NEXT I
340 REM NOW FIND THE MAXIMUM R VALUE
350 FOR I = 1 TO N
360 LET S1 = R[I] MAX S
370 LET S = S1
380 NEXT I
390 REM NOW SCALE ALL R,X BY THIS MAX R = S
400 REM TO MINIMISE ROUND-OFF ERRORS IN COMPUTATION
410 FOR I = 1 TO N
420 LET R[I] = R[I] / S
430 LET X[I] = X[I] / S
440 NEXT I
450 REM NOW FIT THE DATA
460 FOR I = 1 TO N
470 LET P = R[I] * R[I] + X[I] * X[I]
480 LET A1 = A1 + R[I]
490 LET A2 = A2 + X[I]
500 LET A3 = A3 + P
510 LET A4 = A4 + R[I] * R[I]
520 LET A5 = A5 + X[I] * X[I]
530 LET A6 = A6 + P * P
540 LET A7 = A7 + R[I] * X[I]
550 LET A8 = A8 + R[I] * P
560 LET A9 = A9 + X[I] * P
570 NEXT I
580 LET B1 = A4 - A1 * A1 / N
590 LET B2 = A5 - A2 * A2 / N
600 LET B3 = A6 - A3 * A3 / N
610 LET B4 = A7 - A1 * A2 / N
```

```
620 LET B5 = A8 - A1 * A3 / N
630 LET B6 = A9 - A2 * A3 / N
640 LET F1 = ((B4 * B6 - B2 * B5) ^ 2) / ((B1 * B2-B4*B4)*(B2*B3-B6*B6))
650 LET D = B1 * B2 - B4 * B4
660 LET C = (B4 * B5 - B1 * B6) / D
670 LET B = (B4 * B6 - B2 * B5) / D
680 LET A = (-B * A1 - C * A2 - A3) / N
690 LET D1 = -B / 2
700 LET D2 = -1 * (ABS(C / 2) MAX .0001)
710 LET D3 = SQR(D1 * D1 + D2 * D2 - A)
720 LET E = SQR(ABS(B3 + B * B5 + C * B6) / (N - 3))
730 LET E1 = E * SQR((A4 * A5 - A7 * A7) / (N * D))
740 LET E2 = E * SQR(B2 / D)
750 LET E3 = E * SQR(B1 / D)
760 LET E4 = SQR(E1 * E1 + (D1 * E2) ^ 2 + (D2 * E3) ^ 2) / (2 * D3)
770 LET D4 = SQR(D3 * D3 - D2 * D2)
780 LET E5 = SQR((2 * D3 * E4) ^ 2 + (D2 * E3) ^ 2) / (2 * D4)
790 LET D5 = D1 + D4
800 LET D6 = D1 - D4
810 LET E6 = SQR(E2 * E2 / 4 + E5 * E5)
820 LET C1 = 3.14159
830 LET M1 = (2 / C1) * ATN(D2 / D4)
840 LET D7 = ((2 / C1) * D2) / (D2 * D2 + D4 * D4)
850 LET D8 = D4 * D7 / D2
860 LET E7 = SQR((D7 * E3 / 2) ^ 2 + (D8 * E5) ^ 2)
 870 REM (WE NOW FIND ESTIMATES OF THE FREQUENCY AT THE MAXIMUM
 880 REM  REACTANCE, F(PEAK), BY WORKING IN THE LOG(V/U) AGAINST
 890 REM  LOG(F) PLANE OF COLE & COLE (1941), AND CALCULATING
 900 REM  WEIGHTED LEAST-SQUARES LINEAR REGRESSIONS USING
 910 REM  ARBITRARY BUT EMPIRICALLY REASONABLE WEIGHTING FACTORS):
 920 LET C2 = .43429
 930 FOR I = 1 TO N
 940 LET W[I] = LOG(F[I]) * C2
 950 LET V[I] = SQR((D5 - R[I]) ^ 2 + X[I] * X[I])
 960 LET U[I] = SQR((R[I] - D6) ^ 2 + X[I] * X[I])
 970 LET K[I] = LOG(V[I] / U[I]) * C2
 980 NEXT I
 990 LET C3 = C4 = C5 = C6 = C7 = C8 = C9 = 0
1000 FOR I = 1 TO N
1010 LET Q[I] = EXP(-((V[I] / U[I]) MAX (U[I] / V[I])) / C2)
1020 REM (THESE Q(I) WILL BE USED AS WEIGHTING FACTORS)
1030 LET C3 = C3 + Q[I]
1040 LET C4 = C4 + Q[I] * W[I]
1050 LET C5 = C5 + Q[I] * K[I]
1060 LET C6 = C6 + Q[I] * W[I] * K[I]
1070 LET C7 = C7 + Q[I] * W[I] * W[I]
1080 LET C8 = C8 + Q[I] * K[I] * K[I]
1090 NEXT I
1100 LET C9 = ((C6 - C4 * C5 / C3) ^ 2) / ((C7 -C4*C4/C3)*(C8-C5*C5/C3))
1110 LET C9 = C9 MIN 1
1120 LET P1 = (1 + M1)
1130 LET P2 = C5 / C3 - P1 * C4 / C3
1140 LET P3 = SQR(ABS(C8 - C5 * C5 / C3 - P1 * (C6 - C4 * C5/C3))/(N-1))
1150 LET P4 = P3 * SQR((C7 / C3) / (C7 - C4 * C4 / C3))
1160 LET Y2 = EXP(-P2 / (P1 * C2))
1170 LET P5 = EXP(-(P2 + P4) / (P1 * C2))
1180 LET P6 = EXP(-(P2 - P4) / (P1 * C2))
1190 LET Y3 = P6 - Y2
1200 LET Y4 = Y2 - P5
1210 LET P1 = (C6 - C4 * C5 / C3) / (C7 - C4 * C4 / C3)
1220 LET P2 = C5 / C3 - P1 * C4 / C3
1230 LET P3 = SQR(ABS(C8 - C5 * C5 / C3 - P1 * (C6 - C4 * C5/C3))/(N-2))
1240 LET P4 = P3 * SQR((C7 / C3) / (C7 - C4 * C4 / C3))
1250 LET P = EXP(-P2 / (P1 * C2))
```

```
1260 LET P5 = EXP(-(P2 + P4) / (P1 * C2))
1270 LET P6 = EXP(-(P2 - P4) / (P1 * C2))
1280 LET P7 = P6 - P
1290 LET P8 = P - P5
1300 LET P9 = P3 / SQR(C7 - C4 * C4 / C3)
1310 LET Y5 = ABS(M1 - (P1 - 1)) / SQR(E7 ^ 2 + P9 ^ 2)
1320 LET Y6 = (2 * N - 5)
1330 REM NOW CALCULATE THE PERMITTIVITY COMPONENTS WHICH ARE
1340 REM IN PARALLEL WITH THE SHUNT CONDUCTANCE 1/R(ZERO):
1350 LET C3 = C4 = C5 = C6 = C7 = C8 = 0
1360 FOR I = 1 TO N
1370 LET Q[I] = SQR(Q[I]) * ((D5 - R[I]) ^ 3)
1380 LET R[I] = R[I] * S
1390 LET X[I] = X[I] * S
1400 LET T[I] = (X[I] / (R[I] ^ 2 + X[I] ^ 2)) / (2 * C1 * F[I])
1410 LET U[I] = ((R[I] / (R[I] ^ 2 + X[I] ^ 2)) -(1/(D5*S)))/(2*C1*F[I])
1420 LET A[I] = LOG(2 * C1 * F[I])
1430 LET B[I] = LOG(U[I])
1440 LET C3 = C3 + Q[I]
1450 LET C4 = C4 + Q[I] * T[I]
1460 LET C5 = C5 + Q[I] * U[I]
1470 LET C6 = C6 + Q[I] * T[I] * U[I]
1480 LET C7 = C7 + Q[I] * T[I] * T[I]
1490 LET C8 = C8 + Q[I] * U[I] * U[I]
1500 NEXT I
1510 REM CALCULATE THE BEST-FIT LINE:
1520 LET B7 = (C6 - C4 * C5 / C3) / (C7 - C4 * C4 / C3)
1530 LET P2 = C5 / C3 - B7 * C4 / C3
1540 LET P3 = SQR(ABS(C8 - C5 * C5 / C3 - B7 * (C6 - C4 * C5/C3))/(N-2))
1550 LET P4 = P3 * SQR((C7 / C3) / (C7 - C4 * C4 / C3))
1560 LET B8 = P3 / SQR(C7 - C4 * C4 / C3)
1570 LET B6 = (-2 / C1) * ATN(B7)
1580 LET D9 = (2 * B7 * B8) / (C1 * (1 + B7 * B7))
1590 LET B9 = ((C6 - C4 * C5 / C3) ^ 2) / ((C7 -C4*C4/C3)*(C8-C5*C5/C3))
1600 LET B9 = B9 MIN 1
1610 REM FIND THE MAXIMUM E'' VALUE AND SET IT EQUAL TO Y
1620 LET Y = 0
1630 FOR I = 1 TO N
1640 LET Y1 = U[I] MAX Y
1650 LET Y = Y1
1660 NEXT I
1670 REM NOW FIND THE MAXIMUM E' VALUE
1680 LET S2 = S
1690 LET S = 0
1700 FOR I = 1 TO N
1710 LET S1 = T[I] MAX S
1720 LET S = S1
1730 NEXT I
1740 REM NOW SCALE ALL T[I] AND U[I] BY A SUITABLE FACTOR
1750 REM TO MINIMISE ROUND-OFF ERRORS IN COMPUTATION
1760 FOR I = 1 TO N
1770 LET T[I] = T[I] / (S MAX (2 * Y))
1780 LET U[I] = U[I] / (S MAX (2 * Y))
1790 NEXT I
1800 LET L8 = P2
1810 LET P2 = P2 / (S MAX (2 * Y))
1820 LET S = S2
1830 REM LASTLY, ASSUMING R(INF)=0, WE DERIVE AN ESTIMATE OF THE QUANTITY
1840 REM            U    =    [E(S) - E(INF)]*[TAU(2)]^(-M)
1850 REM SINCE THE DIELECTRIC DECREMENT AND THE TAU(2) VALUE
1860 REM OF THE POLARIZATION IMPEDANCE CANNOT BE SEPARATELY ISOLATED.
1870 LET A1 = A2 = A3 = A4 = A5 = 0
1880 FOR I = 1 TO N
1890 LET A1 = A1 + Q[I] * A[I]
```

```
1900 LET A2 = A2 + Q[I] * B[I]
1910 LET A3 = A3 + Q[I] * A[I] * B[I]
1920 LET A4 = A4 + Q[I] * A[I] * A[I]
1930 LET A5 = A5 + Q[I] * B[I] * B[I]
1940 NEXT I
1950 LET A6 = (A3 - A1 * A2 / C3) / (A4 - A1 * A1 / C3)
1960 LET A7 = A2 / C3 - A6 * A1 / C3
1970 LET A8 = SQR(ABS(A5 - A2 * A2 / C3 - A6 * (A3 - A1 * A2/C3))/(N-2))
1980 LET A9 = A8 * SQR((A4 / C3) / (A4 - A1 * A1 / C3))
1990 LET B1 = A8 / SQR(A4 - A1 * A1 / C3)
2000 LET B2 = (2 / ((-A6) * C1)) * COS((-A6) * C1 / 2)
2010 LET B3 = B2 * EXP(A7)
2020 LET B4 = B2 * (EXP(A7 + A9) - EXP(A7))
2030 LET B5 = B2 * (EXP(A7) - EXP(A7 - A9))
2040 LET A1 = 1 / (E7 ^ 2)
2050 LET A2 = 1 / (P9 ^ 2)
2060 LET A3 = 1 / (D9 ^ 2)
2070 LET A4 = 1 / (B1 ^ 2)
2080 LET A5 = A1 + A2 + A3 + A4
2090 LET M = (M1 * A1 + (P1 - 1) * A2 + B6 * A3 + A6 * A4) / A5
2100 LET A1 = ((M1 - M) ^ 2) / (E7 ^ 2)
2110 LET A2 = (((P1 - 1) - M) ^ 2) / (P9 ^ 2)
2120 LET A3 = ((B6 - M) ^ 2) / (D9 ^ 2)
2130 LET A4 = ((A6 - M) ^ 2) / (B1 ^ 2)
2140 LET F2 = A1 + A2 + A3 + A4
2150 LET F3 = SQR(F2 / (3 * A5))
2160 GOSUB  2250
2170 LET I$ = H$
2180 LET Y5 = ABS(M - B6) / SQR(E7 ^ 2 + B8 ^ 2)
2190 GOSUB  2250
2200 LET J$ = H$
2210 LET Y5 = ABS(M - A6) / SQR(E7 ^ 2 + B1 ^ 2)
2220 GOSUB  2250
2230 LET K$ = H$
2240 GOTO  2470
2250 REM T-TEST SUBROUTINE
2260 IF Y5 < P[Y6, 1] THEN 2330
2270 IF Y5 >= P[Y6, 1] AND Y5 < P[Y6, 2] THEN 2350
2280 IF Y5 >= P[Y6, 2] AND Y5 < P[Y6, 3] THEN 2370
2290 IF Y5 >= P[Y6, 3] AND Y5 < P[Y6, 4] THEN 2390
2300 IF Y5 >= P[Y6, 4] AND Y5 < P[Y6, 5] THEN 2410
2310 IF Y5 >= P[Y6, 5] AND Y5 < P[Y6, 6] THEN 2430
2320 IF Y5 >= P[Y6, 6] THEN 2450
2330 LET H$ = " 0.10 < P "
2340 GOTO  2460
2350 LET H$ = " 0.05 < P <= 0.10 "
2360 GOTO  2460
2370 LET H$ = " 0.02 < P <= 0.05 "
2380 GOTO  2460
2390 LET H$ = " 0.01 < P <= 0.02 "
2400 GOTO  2460
2410 LET H$ = " 0.002 < P <= 0.01 "
2420 GOTO  2460
2430 LET H$ = " 0.001 < P <= 0.002 "
2440 GOTO  2460
2450 LET H$ = " P <= 0.001 "
2460 RETURN
2470 PRINT %1; I$; J$; K$
2480 PRINT %1; D2, D3, D5, S, E6, D6, Y2, Y3, Y4, P,P7,P8,P2,P4,B3,B4,B5
2490 PRINT %1; M1, E7, P1, P9, B6, D9, A6, B1, M, F3, F1, C9, B9, L8
2500 PRINT %1; N
2510 FOR I = 1 TO N
2520 PRINT %1; F[I], R[I], X[I], T[I], U[I]
2530 NEXT I
```

```
2540 DATA 6.314, 12.71, 31.82, 63.66, 318.3, 636.6
2550 DATA 2.92, 4.303, 6.965, 9.925, 22.33, 31.6
2560 DATA 2.353, 3.182, 4.541, 5.841, 10.21, 12.92
2570 DATA 2.132, 2.776, 3.747, 4.604, 7.173, 8.61
2580 DATA 2.015, 2.571, 3.365, 4.032, 5.893, 6.869
2590 DATA 1.943, 2.447, 3.143, 3.707, 5.208, 5.959
2600 DATA 1.895, 2.365, 2.998, 3.499, 4.785, 5.408
2610 DATA 1.86, 2.306, 2.896, 3.355, 4.501, 5.041
2620 DATA 1.833, 2.262, 2.821, 3.25, 4.297, 4.781
2630 DATA 1.812, 2.228, 2.764, 3.169, 4.144, 4.587
2640 DATA 1.796, 2.201, 2.718, 3.106, 4.025, 4.437
2650 DATA 1.782, 2.179, 2.681, 3.055, 3.93, 4.318
2660 DATA 1.771, 2.16, 2.65, 3.012, 3.852, 4.221
2670 DATA 1.761, 2.145, 2.624, 2.977, 3.787, 4.14
2680 DATA 1.753, 2.131, 2.602, 2.947, 3.733, 4.073
2690 DATA 1.746, 2.12, 2.583, 2.921, 3.686, 4.015
2700 DATA 1.74, 2.11, 2.567, 2.898, 3.646, 3.965
2710 DATA 1.734, 2.101, 2.552, 2.878, 3.61, 3.922
2720 DATA 1.729, 2.093, 2.539, 2.861, 3.579, 3.883
2730 DATA 1.725, 2.086, 2.528, 2.845, 3.552, 3.85
2740 DATA 1.721, 2.08, 2.518, 2.831, 3.527, 3.819
2750 DATA 1.717, 2.074, 2.508, 2.819, 3.505, 3.792
2760 DATA 1.714, 2.069, 2.5, 2.807, 3.485, 3.767
2770 DATA 1.711, 2.064, 2.492, 2.797, 3.467, 3.745
2780 DATA 1.708, 2.06, 2.485, 2.787, 3.45, 3.725
2790 DATA 1.706, 2.056, 2.479, 2.779, 3.435, 3.707
2800 DATA 1.703, 2.052, 2.473, 2.771, 3.421, 3.69
2810 DATA 1.701, 2.048, 2.467, 2.763, 3.408, 3.674
2820 DATA 1.699, 2.045, 2.462, 2.756, 3.396, 3.659
2830 DATA 1.697, 2.042, 2.457, 2.75, 3.385, 3.646
2840 REM NOW GIVE TEST CONDITIONS, THE NUMBER OF DATA POINTS N
2850 REM AND ALL THE F(I), R(I) AND X(I):
2860 DATA "ANDREW STOCKLEY"
2870 DATA "24"
2880 DATA "24TH APRIL 1979"
2890 DATA "12.30 P.M."
2900 DATA "LEFT DORSAL FOREARM"
2910 DATA "27 C"
2920 DATA "65 %"
2930 DATA "1 MICROAMP"
2940 DATA 9
2950 DATA 1000, 28400, 49490
2960 DATA 500, 50960, 81900
2970 DATA 200, 73710, 141330
2980 DATA 100, 151620, 234640
2990 DATA 50, 267260, 334740
3000 DATA 20, 541240, 506030
3010 DATA 10, 824600, 579600
3020 DATA 5, 1.1347E6, 526610
3030 DATA 2, 1.4581E6, 394030
3040 END

***F
```

```
10 REM PROGRAM "CLINPLOT" TO PLOT CLINICAL RESULTS ON THE GRAPH PLOTTER:
15 FILES CIRCDATA
20 DIM F[20], R[20], X[20], T[20], U[20]
25 DIM A$[40], I$[40], J$[40], K$[40]
 30 REM NOW SET UP THE PLOTTING PARAMETERS
 35 PRINT "]ON"; "]INIT"; "]SGL"
 40 LET X = 1000
 45 LET Y = 450
 50 GOSUB  1880
 55 LET X = 7500
 60 LET Y = 11030
 65 GOSUB  1880
 70 PRINT "]TERM"; "]SGS"
 75 LET X = 1100
 80 LET Y = 1831
 85 GOSUB  1880
 90 PRINT "]TERM"; "]SIZE"
 95 LET X = 16
100 LET Y = 25
105 GOSUB  1880
110 PRINT "]TERM"; "]PENC"; "]FONT"
115 LET X = 0
120 LET Y = 5
125 GOSUB  1880
130 REM DRAW ENCLOSING FRAME
135 PRINT "]VEL"
140 LET X = 30
145 GOSUB  2330
150 PRINT "]TERM"; "]MOVE"
155 LET X = 0
160 LET Y = 0
165 GOSUB  1880
170 LET X = 0
175 LET Y = 1831
180 GOSUB  1880
185 LET X = 1100
190 LET Y = 1831
195 GOSUB  1880
200 LET X = 1100
205 LET Y = 0
210 GOSUB  1880
215 LET X = 0
220 LET Y = 0
225 GOSUB  1880
230 PRINT "]TERM"; "]MOVE"
235 LET X = 0
240 LET Y = 573
245 GOSUB  1880
250 LET X = 1100
255 LET Y = 573
260 GOSUB  1880
265 PRINT "]TERM"; "]MOVE"
270 LET X = 0
275 LET Y = 1611
280 GOSUB  1880
285 LET X = 1100
290 LET Y = 1611
295 GOSUB  1880
300 PRINT "]TERM"
305 REM NOTE TEST CONDITIONS
310 PRINT "]VEL"
```

```
315 LET X = 36
320 GOSUB  2330
325 PRINT "]TERM"; "]PENB"; "]MOVE"
330 LET X = 16.9
335 LET Y = 1795
340 GOSUB  1880
345 PRINT "]TERM"; "]LABEL"; "]SF";
350 READ %1; A$
355 PRINT "NAME          =  "; A$
360 READ %1; A$
365 PRINT "AGE           =  "; A$
370 READ %1; A$
375 PRINT "DATE          =  "; A$
380 READ %1; A$
385 PRINT "TIME          =  "; A$
390 READ %1; A$
395 PRINT "BODY SITE     =  "; A$
400 READ %1; A$
405 PRINT "SKIN TEMP.    =  "; A$
410 READ %1; A$
415 PRINT "AMBIENT R.H.  =  "; A$
420 READ %1; A$
425 PRINT "P-P CURRENT   =  "; A$
430 PRINT "]STERM"
435 READ %1; I$, J$, K$
440 READ %1; D2, D3, D5, S, E6, D6, Y2, Y3, Y4, P, P7, P8,P2,P4,B3,B4,B5
445 READ %1; M1, E7, P1, P9, B6, D9, A6, B1, M, F3, F1, C9, B9, L8
450 READ %1; N
455 PRINT "]SIZE"
460 LET X = 16.9
465 LET Y = 28.3
470 GOSUB  1880
475 PRINT "]TERM"
480 REM NOW READ AND SUITABLY RESCALE THE DATA TO BE PLOTTED:
485 LET L5 = (D5 - D6)
490 LET A = 0
495 LET B = -1000
500 LET C = -2 * (D2 * 1000 / L5)
505 FOR I = 1 TO N
510 READ %1; F[I], R[I], X[I], T[I], U[I]
515 LET R[I] = (R[I] - D6 * S) * 1000 / (L5 * S)
520 LET X[I] = X[I] * 1000 / (L5 * S)
525 NEXT I
530 REM NOW MARK OFF THE Z AXES
535 PRINT "]PENA"; "]MOVE"
540 FOR J = 0 TO 100
545 LET L6 = 1 - SGN((J / 10) - INT(J / 10))
550 LET X = 50 + (10 * J)
555 LET Y = 1074
560 GOSUB  1880
565 LET X = 50 + (10 * J)
570 LET Y = 1069 - (L6 * 10)
575 GOSUB  1880
580 LET X = 50 + (10 * J)
585 LET Y = 1074
590 GOSUB  1880
595 NEXT J
600 PRINT "]TERM"; "]MOVE"
605 LET L7 = 1000 * ((-D6 / L5) MAX 0)
610 FOR J = 0 TO ((INT(100 * (D3 - ABS(D2)) / L5) + 1) MIN 50)
615 LET L6 = 1 - SGN((J / 10) - INT(J / 10))
620 LET X = 50 + L7
625 LET Y = 1074 + (10 * J)
630 GOSUB  1880
```

```
635 LET X = 55 + L7 + (L6 * 10)
640 LET Y = 1074 + (10 * J)
645 GOSUB  1880
650 LET X = 50 + L7
655 LET Y = 1074 + (10 * J)
660 GOSUB  1880
665 NEXT J
670 PRINT "]TERM"
675 REM LABEL Z AXES WITH TITLES
680 PRINT "]MOVE"
685 LET X = 70 + L7
690 LET Y = 1072 + 10 * (J - 1)
695 GOSUB  1880
700 PRINT "]TERM"; "]LABEL"; "]SF"; "(SCALED) -X"; "]STERM"; "]SIZE"
705 LET X = 10
710 LET Y = 15
715 GOSUB  1880
720 PRINT "]TERM"
725 PRINT "]LABEL"; "]SF"; "S"; "]STERM"; "]SIZE"
730 LET X = 16.9
735 LET Y = 28.3
740 GOSUB  1880
745 PRINT "]TERM"; "]MOVE"
750 LET X = 750
755 LET Y = 1092
760 GOSUB  1880
765 PRINT "]TERM"; "]LABEL"; "]SF"; "(SCALED) R"; "]STERM"; "]SIZE"
770 LET X = 10
775 LET Y = 15
780 GOSUB  1880
785 PRINT "]TERM"
790 PRINT "]LABEL"; "]SF"; "S"; "]STERM"; "]SIZE"
795 LET X = 16.9
800 LET Y = 28.3
805 GOSUB  1880
810 PRINT "]TERM"; "]MOVE"
815 LET X = 40
820 LET Y = 1032
825 GOSUB  1880
830 PRINT "]TERM"; "]LABEL"; "]SF"; "R"; "]STERM"; "]SIZE";
835 LET X = 10
840 LET Y = 12
845 GOSUB  1880
850 PRINT "]TERM"
855 PRINT "]LABEL"; "]SF"; "00"; "]STERM"; "]SIZE"
860 LET X = 16.9
865 LET Y = 28.3
870 GOSUB  1880
875 PRINT "]TERM"; "]MOVE"
880 LET X = 1040
885 LET Y = 1032
890 GOSUB  1880
895 PRINT "]TERM"; "]LABEL"; "]SF"; "R"; "]STERM"; "]SIZE";
900 LET X = 12
905 LET Y = 12
910 GOSUB  1880
915 PRINT "]TERM"
920 PRINT "]LABEL"; "]SF"; "0"; "]STERM"
925 REM NOW PLOT Z DATA POINTS
930 PRINT "]PENB"
935 FOR J = N TO 1 STEP -1
940 PRINT "]SIZE"
945 LET X = 16.9
950 LET Y = 28.3
```

```
955 GOSUB  1880
960 PRINT "]TERM"; "]MOVE"
965 LET X = 50 + R[J]
970 LET Y = 1072 + X[J]
975 GOSUB  1880
980 PRINT "]TERM"; "]LABEL"; "]AFE"; "]STERM";
985 IF X[J] < 20 THEN 1015
990 PRINT "]SIZE";
995 LET X = 10
1000 LET Y = 20
1005 GOSUB  1880
1010 PRINT "]TERM"; "]LABEL"; "]SF"; "  "; F[J]; "]STERM"
1015 NEXT J
1020 REM NOW PLOT THE FITTED ARC
1025 PRINT "]PEND"; "]VEL"
1030 LET X = 30
1035 GOSUB  2330
1040 PRINT "]TERM"; "]MOVE"
1045 LET X = 50
1050 LET Y = 1072
1055 GOSUB  1880
1060 FOR J = 10 TO 500 STEP 10
1065 LET X = 50 + J
1070 LET Y = 1072 + (-C + SQR(C * C - 4 * (J * J + B * J + A))) / 2
1075 GOSUB  1880
1080 NEXT J
1085 FOR J = 500 TO 10 STEP -10
1090 LET X = 1050 - J
1095 LET Y = 1072 + (-C + SQR(C * C - 4 * (J * J + B * J + A))) / 2
1100 GOSUB  1880
1105 NEXT J
1110 LET X = 1050
1115 LET Y = 1072
1120 GOSUB  1880
1125 PRINT "]TERM"; "]PENA"; "]VEL"
1130 REM NOW PLOT E* AXES
1135 LET X = 36
1140 GOSUB  2330
1145 PRINT "]TERM"; "]MOVE"
1150 FOR J = 0 TO 100
1155 LET L6 = 1 - SGN((J / 10) - INT(J / 10))
1160 LET X = 144 + (8.12 * J)
1165 LET Y = 607
1170 GOSUB  1880
1175 LET X = 144 + (8.12 * J)
1180 LET Y = 602 - (L6 * 10)
1185 GOSUB  1880
1190 LET X = 144 + (8.12 * J)
1195 LET Y = 607
1200 GOSUB  1880
1205 NEXT J
1210 PRINT "]TERM"; "]MOVE"
1215 FOR J = 0 TO 50
1220 LET L6 = 1 - SGN((J / 10) - INT(J / 10))
1225 LET X = 144
1230 LET Y = 607 + (8.12 * J)
1235 GOSUB  1880
1240 LET X = 149 + (L6 * 10)
1245 LET Y = 607 + (8.12 * J)
1250 GOSUB  1880
1255 LET X = 144
1260 LET Y = 607 + (8.12 * J)
1265 GOSUB  1880
1270 NEXT J
```

```
1275 PRINT "]TERM"; "]SIZE"
1280 REM NOW LABEL E* AXES
1285 LET X = 16.9
1290 LET Y = 28.3
1295 GOSUB  1880
1300 PRINT "]TERM"; "]MOVE"
1305 LET X = 750
1310 LET Y = 627
1315 GOSUB  1880
1320 PRINT "]TERM"; "]LABEL"; "]SF"; "(SCALED) E'(P)"; "]STERM"; "]MOVE"
1325 LET X = 164
1330 LET Y = 1013
1335 GOSUB  1880
1340 PRINT "]TERM"; "]LABEL"; "]SF"; "(SCALED) E''(P)"; "]STERM";"]MOVE"
1345 LET X = 115
1350 LET Y = 590
1355 GOSUB  1880
1360 PRINT "]TERM"; "]LABEL"; "]SF"; "0"; "]STERM"; "]PENB"
1365 REM NOW PLOT THE E* DATA POINTS
1370 FOR J = 1 TO N
1375 PRINT "]MOVE";
1380 LET X = 144 + T[J] * 812
1385 LET Y = 607 + U[J] * 812
1390 GOSUB  1880
1395 PRINT "]TERM"; "]LABEL"; "]AFE"; "]STERM";
1400 IF Y <= 660 THEN 1430
1405 PRINT "]SIZE";
1410 LET X = 10
1415 LET Y = 20
1420 GOSUB  1880
1425 PRINT "]TERM"; "]LABEL"; "]SF"; "  "; F[J]; "]STERM"
1430 NEXT J
1435 PRINT "]SIZE"
1440 LET X = 16.9
1445 LET Y = 28.3
1450 GOSUB  1880
1455 PRINT "]TERM"
1460 REM NOW PLOT FITTED E* LINE
1465 PRINT "]PEND"; "]VEL"
1470 LET X = 30
1475 GOSUB  2330
1480 PRINT "]TERM"; "]MOVE"
1485 LET X = 144
1490 LET Y = 607 + (P2 * 812)
1495 GOSUB  1880
1500 LET Y = (607 + (P2 * 812) + 812 * TAN((-B6) * 1.5708)) MIN 1013
1505 LET X = 144 + (Y - (607 + (P2 * 812))) / TAN((-B6) * 1.5708)
1510 GOSUB  1880
1515 PRINT "]TERM"; "]PENB"; "]VEL"
1520 LET X = 36
1525 GOSUB  2330
1530 REM NOW PRINT LEAST-SQUARES FITS
1535 PRINT "]MOVE"
1540 LET X = 643
1545 LET Y = 538
1550 GOSUB  1880
1555 PRINT "]TERM"; "]LABEL"; "]SF";
1560 PRINT "+PSE   +/-SE   -PSE"; "]STERM"; "]MOVE"
1565 LET X = 17
1570 LET Y = 492
1575 GOSUB  1880
1580 PRINT "]TERM"; "]LABEL"; "]SF";
1585 PRINT "NO. OF DATA PAIRS  =  "; N
1590 PRINT "R(ZERO)            =  "; D5 * S
```

```
1595 PRINT "R(INFINITY)          =  "; D6 * S
1600 PRINT "F(PEAK) [USING M1] =  "; Y2
1605 PRINT "F(PEAK) [USING M2] =  "; P
1610 PRINT "E''[E'=0]            =  "; L8
1615 PRINT "     'U'             =  "; B3; B4; B5
1620 PRINT "M1 FROM Z LOCUS      =  "; -M1
1625 PRINT "M2 FROM V/U PLOT     =  "; (1 - P1)
1630 PRINT "M3 FROM E* LOCUS     =  "; -B6
1635 PRINT "M4 FROM LN E'' PLOT=  "; -A6
1640 PRINT "& WEIGHTED MEAN M    =  "; -M
1645 PRINT "SINCE COMPARING M1 WITH M2, M3 AND M4 RESPECTIVELY,"
1650 PRINT "THE SIGNIFICANCE OF THE DIFFERENCE BETWEEN THE MEANS IS"
1655 PRINT I$; "  "; J$; " AND "; K$
1660 PRINT "COEFF. DET. OF (UNWEIGHTED) Z ARC FIT  =  "; F1
1665 PRINT "COEFF. DET. OF (WEIGHTED) V/U PLOT     =  "; C9
1670 PRINT "COEFF. DET. OF (WEIGHTED) E* LINE FIT  =  "; B9
1675 PRINT "]STERM"; "]MOVE"
1680 LET X = 625.5
1685 LET Y = 492
1690 GOSUB  1880
1695 PRINT "]TERM"; "]LABEL"; "]SF";
1700 PRINT
1705 PRINT "      "; E6 * S
1710 PRINT "      "; E6 * S
1715 PRINT Y3; "   "; Y4
1720 PRINT P7; "   "; P8
1725 PRINT "    "; P4
1730 PRINT
1735 PRINT "    "; E7
1740 PRINT "    "; P9
1745 PRINT "    "; D9
1750 PRINT "    "; B1
1755 PRINT "    "; F3
1760 PRINT "]STERM"; "]OFF"
1765 STOP
1770 REM HEWLETT PACKARD GRAPH PLOTTER PARAMETER ENCODING!!!!!!!!!!!!!!!
1775 REM REFERENCE: HP 7221A GRAPHICS PLOTTER
1780 REM OPERATING AND PROGRAMMING MANUAL
1785 REM CHAPTER 9
1790 REM
1795 REM MULTIPLE-BYTE PAIR OF NUMBERS (MBP) LINE 2000
1800 REM SINGLE-BYTE NUMBER (SBN) LINE 3000
1805 REM MULTIPLE-BYTE NUMBER (MBN) LINE 4000
1810 REM MULTIPLE-BYTE ANGLE (MBA) LINE 5000
1815 REM PAIR OF MULTIPLE-BYTE NUMBERS (PMB) LINE 6000
1820 REM PRINTING ROUTINE LINE 7000
1825 REM!!!!!!!!!!!!!!!!!!!!!!!!!!!!!!!!!!!!!!!!!!!!!!!!!!!!!!!!!!!!!!!!
1830 REM MBP ENCODING
1835 DIM Z[5], Z$[8], W$[64], X$[30], Y$[30]
1840 LET W$ = " !QP$%&'()A+,-./0123456789:;<=>?@ABCDEFGHIJ"
1845 LET Y$ = "KLMNOPQRSTUVWXYZ[L]^R"
1850 LET W$[LEN(W$) + 1] = Y$
1855 REM X$=LOWERCASE A TO O
1860 LET X$ = "@                  "
1865 LET X = INT(X + .5)
1870 LET Y = INT(Y + .5)
1875 RETURN
1880 GOSUB  1835
1885 LET F8 = 2
1890 LET N9 = X
1895 IF X > Y THEN 1905
1900 LET N9 = Y
1905 IF N9 < 256 THEN 2155
1910 IF N9 < 2048 THEN 1935
```

```
1915 IF N9 < 16385 THEN 2030
1920 PRINT "ERROR OUT OF RANGE IN MBP FORMAT", X
1925 RETURN
1930 REM 4-BYTE CONVERSION
1935 LET X7 = INT(X / 128)
1940 LET R9 = X - 128 * X7
1945 LET X8 = INT(R9 / 2)
1950 LET X9 = R9 - 2 * X8
1955 LET Y7 = INT(Y / 64)
1960 LET Y8 = Y - 64 * Y7
1965 LET Z[1] = 96 + X7
1970 LET Z[2] = X8
1975 LET Z[3] = Y7 + 32 * X9
1980 LET Z[4] = Y8
1985 IF Z[2] > 31 THEN 1995
1990 LET Z[2] = Z[2] + 64
1995 IF Z[3] > 31 THEN 2005
2000 LET Z[3] = Z[3] + 64
2005 IF Z[4] > 31 THEN 2015
2010 LET Z[4] = Z[4] + 64
2015 LET Z9 = 4
2020 GOSUB  2975
2025 RETURN
2030 LET X7 = INT(X / 1024)
2035 LET R9 = X - 1024 * X7
2040 LET X8 = INT(R9 / 16)
2045 LET X9 = R9 - 16 * X8
2050 LET Y7 = INT(Y / 4096)
2055 LET R9 = Y - 4096 * Y7
2060 LET Y8 = INT(R9 / 64)
2065 LET Y9 = R9 - 64 * Y8
2070 REM 5-BYTE CONVERSION
2075 LET Z[1] = 96 + X7
2080 LET Z[2] = X8
2085 LET Z[3] = Y7 + 4 * X9
2090 LET Z[4] = Y8
2095 LET Z[5] = Y9
2100 IF Z[2] > 31 THEN 2110
2105 LET Z[2] = Z[2] + 64
2110 IF Z[3] > 31 THEN 2120
2115 LET Z[3] = Z[3] + 64
2120 IF Z[4] > 31 THEN 2130
2125 LET Z[4] = Z[4] + 64
2130 IF Z[5] > 31 THEN 2140
2135 LET Z[5] = Z[5] + 64
2140 LET Z9 = 5
2145 GOSUB  2975
2150 RETURN
2155 IF N9 > 31 THEN 2200
2160 IF N9 > 3 THEN 2280
2165 IF N9 >= 0 THEN 2175
2170 PRINT "ERROR N<0"
2175 REM 1-BYTE CONVERSION::::::::::::::::::::::::::::::::::::::::
2180 LET Z[1] = Y + 96 + 4 * X
2185 LET Z9 = 1
2190 GOSUB  2975
2195 RETURN
2200 REM 3-BYTE CONVERSION::::::::::::::::::::::::::::::::::::::::
2205 LET X7 = INT(X / 16)
2210 LET X8 = X - 16 * X7
2215 LET F7 = INT(Y / 64)
2220 LET Y7 = Y - 64 * F7
2225 REM 3-BYTE CONVERSION
2230 LET Z[1] = X7 + 96
```

```
2235 LET Z[2] = F7 + 4 * X8
2240 LET Z[3] = Y7
2245 IF Z[2] > 31 THEN 2255
2250 LET Z[2] = Z[2] + 64
2255 IF Z[3] > 31 THEN 2265
2260 LET Z[3] = Z[3] + 64
2265 LET Z9 = 3
2270 GOSUB  2975
2275 RETURN
2280 REM 2-BYTE CONVERSION
2285 LET X7 = INT(X / 2)
2290 LET X8 = X - 2 * X7
2295 LET Z[1] = X7 + 96
2300 LET Z[2] = Y + 32 * X8
2305 IF Z[2] > 31 THEN 2315
2310 LET Z[2] = Z[2] + 64
2315 LET Z9 = 2
2320 GOSUB  2975
2325 RETURN
2330 REM SBN ENCODING
2335 REM X USED ONLY
2340 LET F8 = 1
2345 GOSUB  1835
2350 IF X < 64 AND X >= 0 THEN 2365
2355 PRINT "ERROR OUT OF RANGE IN SBN ENCODING", X
2360 RETURN
2365 LET Z[1] = X
2370 IF Z[1] > 31 THEN 2380
2375 LET Z[1] = Z[1] + 64
2380 LET Z9 = 1
2385 GOSUB  2975
2390 RETURN
2395 REM MBN ENCODING
2400 REM X ONY USED
2405 LET F8 = 2
2410 GOSUB  1835
2415 IF X < 0 OR X > 32767 THEN 2425
2420 GOTO  2435
2425 PRINT "ERROR OUT OF RANGE IN MBN ENCODING", X
2430 RETURN
2435 IF X < 16 THEN 2450
2440 IF X < 1024 THEN 2475
2445 IF X < 32768 THEN 2500
2450 REM 1-BYTE CONVERSION
2455 LET Z[1] = X + 96
2460 LET Z9 = 1
2465 GOSUB  2975
2470 RETURN
2475 REM 2-BYTE CONVERSION
2480 LET Z9 = 2
2485 LET X7 = INT(X / 64)
2490 LET X8 = X - 64 * X7
2495 GOTO  2545
2500 REM 3-BYTE CONVERSION
2505 LET Z9 = 3
2510 LET X7 = INT(X / 4096)
2515 LET R9 = X - 4096 * X7
2520 LET X8 = INT(R9 / 64)
2525 LET X9 = R9 - 64 * X8
2530 LET Z[3] = X9
2535 IF Z[3] > 31 THEN 2545
2540 LET Z[3] = Z[3] + 64
2545 LET Z[2] = X8
2550 IF Z[2] > 31 THEN 2560
```

```
2555 LET Z[2] = Z[2] + 64
2560 LET Z[1] = X7 + 96
2565 GOSUB  2975
2570 RETURN
2575 REM MBA ENCODING
2580 REM X USED ONLY
2585 LET Z[1] = 0
2590 LET F8 = 2
2595 GOSUB  1835
2600 IF X < 0 OR X >= 360 THEN 2610
2605 GOTO  2620
2610 PRINT "ERROR OUT OF RANGE IN MBA ENCODING", X
2615 RETURN
2620 IF X < 180 THEN 2635
2625 LET Z[1] = 8
2630 LET X = X - 180
2635 LET X = INT((X / 90) * 16384)
2640 LET X7 = INT(X / 4096)
2645 LET Z[1] = Z[1] + X7 + 96
2650 LET R9 = X - 4096 * X7
2655 IF R9 > 0 THEN 2675
2660 LET Z9 = 1
2665 GOSUB  2975
2670 RETURN
2675 LET X8 = INT(R9 / 64)
2680 LET X9 = INT((R9 - 64) * X8)
2685 LET Z9 = 3
2690 IF X9 = 0 THEN 2715
2695 LET Z9 = 2
2700 LET Z[3] = X9
2705 IF Z[3] >= 32 THEN 2715
2710 LET Z[3] = Z[3] + 64
2715 LET Z[2] = X8
2720 IF Z[2] >= 32 THEN 2730
2725 LET Z[2] = Z[2] + 64
2730 GOSUB  2975
2735 RETURN
2740 REM PMB ENCODING
2745 REM X & Y USED BUT ENCODED SEPARATELY
2750 REM X ENCODED FIRST THEN Y
2755 LET F8 = 1
2760 GOSUB  1835
2765 LET F9 = 64
2770 GOTO  2785
2775 LET X = Y
2780 LET F9 = 32
2785 IF X < 0 THEN 2815
2790 IF X < 16 THEN 2840
2795 IF X < 512 THEN 2870
2800 IF X < 16384 THEN 2920
2805 PRINT "ERROR OUT OF RANGE IN PMB ENCODING", X
2810 RETURN
2815 IF X >= -16 THEN 2835
2820 IF X >= -512 THEN 2865
2825 IF X >= -16384 THEN 2910
2830 GOTO  2805
2835 LET X = X + 32
2840 LET Z[1] = X + F9
2845 LET Z9 = 1
2850 GOSUB  2975
2855 IF F9 = 64 THEN 2775
2860 RETURN
2865 LET X = X + 1024
2870 LET X7 = INT(X / 32)
```

```
2875 LET X8 = X - 32 * X7
2880 LET Z[1] = X7 + F9
2885 LET Z[2] = X8 + F9
2890 LET Z9 = 2
2895 GOSUB  2975
2900 IF F9 = 64 THEN 2775
2905 RETURN
2910 LET X = X + 16384
2915 LET X = X + 16384
2920 LET X7 = INT(X / 1024)
2925 LET R9 = X - 1024 * X7
2930 LET X8 = INT(R9 / 32)
2935 LET X9 = R9 - 32 * X8
2940 LET Z[1] = X7 + F9
2945 LET Z[2] = X8 + F9
2950 LET Z[3] = X9 + F9
2955 LET Z9 = 3
2960 GOSUB  2975
2965 IF F9 = 64 THEN 2775
2970 RETURN
2975 REM PRINT ROUTINE FOR ALL ENCODING
2980 LET Z$[1, 1] = " "
2985 REM Z$(1,1)=LOWERCASE S
2990 IF F8 < 2 THEN 3030
2995 LET Z[1] = Z[1] - 95
3000 IF Z[1] > 1 THEN 3010
3005 LET Z$[1, 1] = "*"
3010 LET Z$[2, 2] = X$[Z[1], Z[1]]
3015 IF Z9 > 1 THEN 3030
3020 LET G9 = 2
3025 GOTO  3080
3030 LET G9 = F8
3035 FOR I9 = F8 TO Z9
3040 LET G9 = G9 + 1
3045 LET Z[I9] = Z[I9] - 31
3050 LET Z$[G9] = W$[Z[I9], Z[I9]]
3055 IF Z[I9] = 3 OR Z[I9] = 4 OR Z[I9] = 11ORZ[I9]=61ORZ[I9]=64THEN3065
3060 GOTO  3075
3065 LET G9 = G9 + 1
3070 LET Z$[G9] = "£"
3075 NEXT I9
3080 IF Z$[1, 1] = " " THEN 3095
3085 PRINT Z$[1, G9]
3090 RETURN
3095 PRINT Z$[2, G9]
3100 RETURN
3105 END

***F
```

APPENDIX D: PROGRAM "VICHAR" AND PROGRAM "VE4PLOT"

Program VICHAR was introduced in Section 8.4, and its purpose is to operate upon the data displayed on the front panel of the Analyser such that a self-calibration procedure and the obtaining of Euler coefficients relating to particular skin regions (cf. subsection 6.3.c) can be achieved. The program then calculates points from which a phase-adjusted Lissajous figure can be constructed for each impedance of interest, and records these points in files which may later be used by programs such as VE4PLOT to draw the corresponding voltage/current characteristic curves.

Program VICHAR works as follows. After a measurement procedure at a single frequency, the clinical investigator notes down from the LED display of the Analyser the 45 numbers of the sequence

0th harmonic	(i.e. offsets)	for	I_{in},	Z_{14a},	Z_{34},	Z_{24}	and	Z_{14}
1st harmonic	$\|Z\|$	values	for	"	"	"	"	"	"
"	"	θ	values	for	"	"	"	"	"	"
2nd harmonic	$\|Z\|$	values	for	"	"	"	"	"	"
⋮									
4th harmonic	θ	values	for	"	"	"	"	"	"

These numbers we will call D(J), with J = 1,2 ... 45. The $|Z|,\theta$ format is used because one of the peculiarities of the state in which the Analyser was delivered to us was that the display of data in the R, X format is not necessarily accurate, whereas the display in the $|Z|,\theta$ format always is. This is the reverse of what might have been expected from the general plan of the software.

The next step is to convert the D(J) values for the first and higher harmonics to the rectangular format from the polar. The data resulting from this transformation are labelled T(J).

Then all the I_{in} data are multiplied by (-200,000) to reveal the voltages measured across the 200 kΩ resistor which allows the current input waveform to be monitored. The minus sign corrects for the polarity of I_{in}. Next the rectangular impedance components of the remaining T(J) for J greater than 6 are multiplied by the nominal (requested) value of I_{in} to convert them to voltages too, and these transformations produce the set of data A(J).

Finally, the vectors represented by the A(J) are corrected in amplitude and phase to self-calibrate them against the V_{in} vector measured across the 200 kΩ input monitoring resistor. This produces the final set of data, B(J), and the program prints a table of J, D(J), T(J), A(J) and B(J) for J = 1 to 45.

Next, the procedures of subsection 6.3.c are employed to derive the Euler coefficients of the voltage waveforms across the impedances of interest, and the program prints a table of them. Another table follows, giving the resolved components R_s and X_s of Z_{e1}, Z_{e4}, Z_d and Z_i at the frequency measured, assuming that non-linear properties are negligible, this table being printed just for purposes of rough comparison. In the example given, Z_{e1} and Z_{e4} happen to be so large that the estimated value of Z_d will be hopelessly inaccurate due to subtraction errors, and so there would be little point in plotting its correspondingly inaccurate V/I characteristic curve. The program however does not realize this, and so it continues, regardless, to process the Z_d data together with the rest.

The final stage of the program is to employ the procedures illustrated by equations (8.4.1) and (8.4.3) to calculate, tabulate and store in appropriate files numbers from which phase-adjusted Lissajous figures, i.e. voltage/current characteristic curves, can be plotted.

An example printout produced by the program VICHAR when calculating the data from which Fig. 8.4.II was plotted, is given in this Appendix after the program VICHAR itself.

Following that there is the program VE4PLOT which was used to actually plot Figure 8.4.II; similar programs VE1PLOT, VDPLOT and VIPLOT were also written to act upon the results of program VICHAR. All these plotting programs however need to have appended to them a section of subroutines equivalent to that already reproduced in Appendix C as lines 1770 and following of program CLINPLOT.

```
10 REM PROGRAM "VICHAR" TO CALCULATE THE VOLTAGE/CURRENT CHARACTERISTIC
20 REM CURVE OF PARTICULAR SKIN REGIONS, USING DATA OBTAINED BY
30 REM THE FOURIER TRANSFORM IMPEDANCE ANALYSER.
40 FILES IINDATA, VE1DATA, VE4DATA, VDDATA, VIDATA
50 DIM D[45], T[45], A[45], B[45], E[9, 5], G[26], I[50], V[50, 5]
60 DIM H$[8], L$[40]
70 LET C1 = .017453
80 LET C2 = 200000
90 READ C
100 FOR J = 1 TO 45
110 READ D[J]
120 NEXT J
130 FOR J = 1 TO 5
140 LET T[J] = D[J]
150 NEXT J
160 FOR P = 6 TO 36 STEP 10
170 FOR J = P TO (P + 4)
180 LET T[J] = D[J] * COS(D[J + 5] * C1)
190 NEXT J
200 NEXT P
210 FOR P = 11 TO 41 STEP 10
220 FOR J = P TO (P + 4)
230 LET T[J] = D[J - 5] * SIN(D[J] * C1)
240 NEXT J
250 NEXT P
260 LET A[1] = C2 * T[1]
270 FOR J = 2 TO 5
280 LET A[J] = T[J]
290 NEXT J
300 FOR J = 6 TO 45
310 LET A[J] = C * T[J]
320 NEXT J
330 LET A[6] = A[6] * C2 / C
340 LET A[11] = A[11] * C2 / C
350 REM (THE COLUMN "A" SHOULD NOW CONTAIN
360 REM  THE NUMBERS AVAILABLE FROM THE REAR SOCKET).
370 REM  WE NOW CORRECT FOR NEGATIVE INPUT CURRENT:
380 FOR J = 1 TO 41 STEP 5
390 LET A[J] = -1 * A[J]
400 NEXT J
410 REM WE NOW CORRECT FOR THE ATTENUATION AND PHASE SHIFT
420 REM INTRODUCED BY THE GAIN-CONTROLLED AMPLIFIER:
430 LET C3 = A[6] ^ 2 + A[11] ^ 2
440 LET C4 = C * C2 / SQR(C3)
450 LET C5 = C * C2 / C3
460 FOR J = 1 TO 5
470 LET B[J] = A[J] * C4
480 NEXT J
490 FOR P = 6 TO 36 STEP 10
500 FOR J = P TO (P + 4)
510 LET B[J] = (A[J] * A[6] + A[J + 5] * A[11]) * C5
520 NEXT J
530 NEXT P
540 FOR P = 11 TO 41 STEP 10
550 FOR J = P TO (P + 4)
560 LET B[J] = (A[J] * A[6] - A[J - 5] * A[11]) * C5
570 NEXT J
580 NEXT P
590 REM (THE EULER COEFFICIENTS IN THE COLUMN "B" ARE NOW
600 REM  AMPLITUDE- AND PHASE-CORRECTED TO MATCH THE REQUIRED
610 REM  INPUT CURRENT).
```

```
620 FOR J = 1 TO 45
630 PRINT J, D[J], T[J], A[J], B[J]
640 NEXT J
650 REM  WE NOW SOLVE FOR THE EULER COEFFICIENTS OF
660 REM  PARTICULAR IMPEDANCES:
670 LET P = 0
680 FOR J = 5 TO 45 STEP 5
690 LET P = P + 1
700 LET E[P, 1] = B[J - 4]
710 LET E[P, 2] = B[J] - 2 * B[J - 1] + B[J - 2] - B[J - 3] / 2
720 LET E[P, 3] = 2 * B[J - 2] - B[J - 1] - B[J - 3] / 2
730 LET E[P, 4] = 3 * (B[J - 1] - B[J - 2])
740 LET E[P, 5] = B[J - 3] / 2
750 NEXT J
760 PRINT
770 PRINT
780 PRINT
790 LET C6 = C2 / E[2, 1]
800 LET G[1] = E[2, 2] * C6
810 LET G[2] = E[2, 3] * C6
820 LET G[3] = E[2, 4] * C6
830 LET G[4] = E[2, 5] * C6
840 LET G[5] = E[3, 2] * C6
850 LET G[6] = E[3, 3] * C6
860 LET G[7] = E[3, 4] * C6
870 LET G[8] = E[3, 5] * C6
880 PRINT "FOR I =";C*1E6;"MICROAMPS THE EULER VOLTAGE COEFFICIENTS ARE"
890 PRINT
900 PRINT
910 LET H$ = "         "
920 PRINT TAB(13); "V(IN)"; H$; "V(E1)"; H$;"V(E4)";H$;"V(D)";H$;" V(I)"
930 PRINT
940 LET L$ = "A0/2 A1   B1   A2   B2   A3   B3   A4   B4     "
950 FOR P = 1 TO 9
960 LET Q1 = E[P, 1]
970 LET Q2 = E[P, 2]
980 LET Q3 = E[P, 3]
990 LET Q4 = E[P, 4]
1000 LET Q5 = E[P, 5]
1010 LET W = (4 * P) - 3
1020 LET Z = W + 3
1030 PRINT L$[W,Z];TAB(8);Q1;TAB(21);Q2;TAB(34);Q3;TAB(47);Q4;TAB(60);Q5
1040 NEXT P
1050 PRINT
1060 PRINT " SO AT THIS FREQUENCY"
1070 PRINT
1080 PRINT "R(FUNDAMENTAL)=", G[1], G[2], G[3], G[4]
1090 PRINT "X(FUNDAMENTAL)=", G[5], G[6], G[7], G[8]
1100 REM WE NOW CALCULATE THE VARIOUS VOLTAGES ACROSS THESE PARTICULAR
1110 REM IMPEDANCES AT N POINTS THROUGH THE STIMULATING WAVEFORM PERIOD:
1120 LET C7 = 3.14159
1130 LET N = 50
1140 FOR K = 1 TO N
1150 FOR J = 1 TO 5
1160 FOR P = 9 TO 21
1170 LET G[P] = 0
1180 NEXT P
1190 FOR P = 1 TO 4
1200 LET G[P + 8] = SQR(E[2 * P, J] ^ 2 + E[(2 * P + 1), J] ^ 2)
1210 NEXT P
1220 FOR P = 1 TO 4
1230 LET G[P + 12] = ATN(E[(2 * P + 1), J] / E[2 * P, J])
1240 NEXT P
1250 FOR P = 1 TO 4
```

```
1260 LET G[J + 16] = G[J + 16] + G[P + 8] *SIN(2*P*C7*K/N+G[P+12]-G[13])
1270 NEXT P
1280 LET V[K, J] = E[1, J] + G[J + 16]
1290 LET I[K] = V[K, 1] / (2 * C2)
1300 NEXT J
1310 PRINT %1; I[K]
1320 PRINT %2; V[K, 2]
1330 PRINT %3; V[K, 3]
1340 PRINT %4; V[K, 4]
1350 PRINT %5; V[K, 5]
1360 NEXT K
1370 REM NOW SORT THESE RESULTS INTO ASCENDING ORDER OF CURRENT VALUE:
1380 LET P = 0
1390 FOR K = 2 TO N
1400 IF I[K] >= I[K - 1] THEN 1570
1410 LET G[22] = I[K]
1420 LET G[23] = V[K, 2]
1430 LET G[24] = V[K, 3]
1440 LET G[25] = V[K, 4]
1450 LET G[26] = V[K, 5]
1460 LET I[K] = I[K - 1]
1470 LET V[K, 2] = V[(K - 1), 2]
1480 LET V[K, 3] = V[(K - 1), 3]
1490 LET V[K, 4] = V[(K - 1), 4]
1500 LET V[K, 5] = V[(K - 1), 5]
1510 LET I[K - 1] = G[22]
1520 LET V[(K - 1), 2] = G[23]
1530 LET V[(K - 1), 3] = G[24]
1540 LET V[(K - 1), 4] = G[25]
1550 LET V[(K - 1), 5] = G[26]
1560 LET P = 1
1570 NEXT K
1580 IF P > 0 THEN 1380
1590 PRINT
1600 PRINT
1610 PRINT " THUS CONSIDERING"; N; "POINTS THROUGH THE STIMULATING"
1620 PRINT " WAVEFORM PERIOD, AND PHASE-NORMALIZING APPROPRIATELY,"
1630 PRINT " WE HAVE:"
1640 PRINT
1650 PRINT"    I(IN)";H$;"  V(EI)";H$;"  V(E4)";H$;"  V(D)";H$;"   V(I)"
1660 PRINT
1670 FOR K = 1 TO N
1680 PRINT I[K], V[K, 2], V[K, 3], V[K, 4], V[K, 5]
1690 NEXT K
1700 PRINT %1; END
1710 PRINT %2; END
1720 PRINT %3; END
1730 PRINT %4; END
1740 PRINT %5; END
1750 DATA .000001
1760 DATA 2.217E-8
1770 DATA -.03506
1780 DATA .0963
1790 DATA .01634
1800 DATA -.873
1810 DATA 9.54E-7
1820 DATA 1006
1830 DATA 1.518E6
1840 DATA 1.52E6
1850 DATA 2.17E6
1860 DATA 181.2
1870 DATA 300
1880 DATA 346
1890 DATA 345.3
```

```
1900 DATA 342.5
1910 DATA 2330
1920 DATA 376.8
1930 DATA 13460
1940 DATA 16450
1950 DATA 61970
1960 DATA 51.28
1970 DATA 64.2
1980 DATA 300.4
1990 DATA 346.7
2000 DATA 279.9
2010 DATA 1916
2020 DATA 117.8
2030 DATA 18180
2040 DATA 7710
2050 DATA 65440
2060 DATA 128.5
2070 DATA 215
2080 DATA 332
2090 DATA 304.9
2100 DATA 310.2
2110 DATA 991.4
2120 DATA 542.2
2130 DATA 9150
2140 DATA 9570
2150 DATA 26740
2160 DATA 42.15
2170 DATA 307.7
2180 DATA 287.4
2190 DATA 41.8
2200 DATA 353
2210 END

***F
```

1	2.21700E-08	2.21700E-08	-.004434	-4.64780E-03
2	-.03506	-.03506	-.03506	-3.67505E-02
3	.0963	.0963	.0963	.100943
4	.01634	.01634	.01634	1.71279E-02
5	-.873	-.873	-.873	-.915095
6	9.54000E-07	-9.53791E-07	.190758	.2
7	1006	502.924	5.02924E-04	5.07981E-04
8	1.51800E+06	1.47287E+06	1.47287	1.53551
9	1.52000E+06	1.47021E+06	1.47021	1.53231
10	2.17000E+06	2.06950E+06	2.0695	2.15452
11	181.2	-1.99293E-08	3.98586E-03	0
12	300	-871.265	-8.71265E-04	-9.24089E-04
13	346	-367385	-.367385	-.417268
14	345.3	-385859	-.385859	-.43657
15	342.5	-652736	-.652736	-.729378
16	2330	1457.48	-1.45748E-03	-1.56723E-03
17	376.8	164.001	1.64001E-04	1.79300E-04
18	13460	6810.21	6.81021E-03	6.88280E-03
19	16450	16008.4	1.60084E-02	1.66937E-02
20	61970	10649.5	1.06495E-02	9.82379E-03
21	51.28	1817.87	-1.81787E-03	-1.87320E-03
22	64.2	339.237	3.39237E-04	3.51926E-04
23	300.4	-11610	-.01161	-1.23163E-02
24	346.7	-3785.92	-3.78592E-03	-4.31815E-03
25	279.9	-61048.1	-6.10481E-02	-6.42109E-02
26	1916	-1192.68	1.19268E-03	1.21708E-03
27	117.8	-96.5003	-9.65003E-05	-1.02611E-04
28	18180	16051.2	1.60512E-02	1.66345E-02
29	7710	4410.69	4.41069E-03	4.48388E-03
30	65440	42234.3	4.22343E-02	4.31665E-02
31	128.5	1499.52	-1.49952E-03	-1.59760E-03
32	215	-67.5613	-6.75613E-05	-6.86904E-05
33	332	-8536.53	-8.53653E-03	-9.29768E-03
34	304.9	-6323.76	-6.32376E-03	-6.72381E-03
35	310.2	-49986.6	-4.99866E-02	-5.33102E-02
36	991.4	735.022	-7.35022E-04	-7.84864E-04
37	542.2	331.532	3.31532E-04	3.38047E-04
38	9150	2735.5	2.73550E-03	2.67558E-03
39	9570	7134.28	7.13428E-03	7.61633E-03
40	26740	26540.3	2.65403E-02	2.77426E-02
41	42.15	665.294	-6.65294E-04	-6.81126E-04
42	307.7	-429.031	-4.29031E-04	-4.56879E-04
43	287.4	-8731.52	-8.73152E-03	-9.21045E-03
44	41.8	6378.63	6.37863E-03	6.52851E-03
45	353	-3261.5	-3.26149E-03	-3.99918E-03

FOR I = 1 MICROAMPS THE EULER VOLTAGE COEFFICIENTS ARE

	V(IN)	V(E1)	V(E4)	V(D)	V(I)
A0/2	-4.64780E-03	-.830032	.203134	-.251447	-1.83753E-02
A1	.2	.62515	1.53845	-.009588	2.53990E-04
B1	0	-.273043	-.397503	-.057908	-4.62045E-04
A2	-1.56723E-03	-1.67705E-02	-3.01780E-03	2.94328E-02	8.96501E-05
B2	-1.87320E-03	-6.80669E-02	-2.04904E-02	2.39945E-02	1.75963E-04
A3	1.21708E-03	5.08846E-02	2.88365E-02	-3.64519E-02	-5.13054E-05
B3	-1.59760E-03	-4.91259E-02	-1.18372E-02	7.72159E-03	-3.43452E-05
A4	-7.84864E-04	1.50165E-02	-2.43419E-03	1.48223E-02	1.69024E-04
B4	-6.81126E-04	-2.60382E-02	-.024721	4.72169E-02	-2.28440E-04

SO AT THIS FREQUENCY

R(FUNDAMENTAL)=	625151	1.53845E+06	-9588.01	253.99
X(FUNDAMENTAL)=	-273043	-397503	-57908	-462.045

THUS CONSIDERING 50 POINTS THROUGH THE STIMULATING WAVEFORM PERIOD, AND PHASE-NORMALIZING APPROPRIATELY, WE HAVE:

I(IN)	V(EI)	V(E4)	V(D)	V(I)
-5.11386E-07	-1.5437	-1.34915	-.309027	-1.91044E-02
-5.09895E-07	-1.51946	-1.34891	-.277843	-1.89595E-02
-5.05347E-07	-1.55554	-1.33334	-.335198	-1.92225E-02
-5.01266E-07	-1.48727	-1.33241	-.249185	-1.88211E-02
-4.91415E-07	-1.55119	-1.30009	-.350042	-1.92836E-02
-4.85828E-07	-1.45134	-1.29791	-.230083	-1.87169E-02
-4.69357E-07	-1.52827	-1.24671	-.34991	-1.92675E-02
-4.63804E-07	-1.41471	-1.24261	-.225419	-1.86623E-02
-4.39172E-07	-1.4862	-1.17002	-.334616	-.01917
-4.35316E-07	-1.37852	-1.16351	-.236778	-1.86572E-02
-4.01175E-07	-1.42611	-1.06722	-.307423	-1.90037E-02
-4.00430E-07	-1.34177	-1.05827	-.262056	-1.86861E-02
-3.59244E-07	-1.30151	-.926062	-.295904	-1.87233E-02
-3.56021E-07	-1.35058	-.936829	-.274228	-1.87959E-02
-3.11983E-07	-1.25357	-.76805	-.330923	-1.87393E-02
-3.04690E-07	-1.26296	-.779359	-.242149	-1.85814E-02
-2.59085E-07	-1.19362	-.587543	-.359303	-1.87098E-02
-2.48413E-07	-1.16681	-.597649	-.217856	-1.83954E-02
-2.01257E-07	-1.1184	-.38968	-.374545	-1.86219E-02
-1.88572E-07	-1.0654	-.396712	-.206041	-1.82642E-02
-1.39489E-07	-1.02676	-.180778	-.37285	-1.84786E-02
-1.26574E-07	-.961415	-.183163	-.208389	-1.81997E-02
-7.50133E-08	-.920282	3.25067E-02	-.353876	-1.82987E-02
-6.37440E-08	-.85704	3.56299E-02	-.223276	-1.81969E-02
-9.22969E-09	-.80345	.244019	-.3207	-1.81124E-02
-1.23876E-09	-.754139	.252522	-.246252	-1.82354E-02
5.64013E-08	-.683077	.448767	-.279006	-1.79544E-02
5.99900E-08	-.654627	.461452	-.271168	-1.82849E-02
1.19193E-07	-.560747	.658025	-.291663	-1.83134E-02
1.20457E-07	-.567296	.643244	-.235741	-1.78552E-02
1.75777E-07	-.475187	.839709	-.302642	-1.82958E-02
1.81656E-07	-.464169	.825433	-.197534	-1.78333E-02
2.29246E-07	-.400913	1.00563	-.301395	-1.82203E-02
2.38911E-07	-.380301	.994442	-.169297	-1.78904E-02
2.79123E-07	-.340755	1.15602	-.288091	-1.80917E-02
2.91350E-07	-.319679	1.14995	-.153307	-1.80099E-02
3.24901E-07	-.296814	1.29157	-.265562	-1.79313E-02
3.38305E-07	-.283028	1.29163	-.148976	-1.81607E-02
3.66016E-07	-.269852	1.41269	-.238445	-.017771
3.79268E-07	-.267781	1.41862	-.153335	-1.83042E-02
4.01851E-07	-.25886	1.51904	-.211938	-1.76461E-02
4.13842E-07	-.2687	1.52938	-.162055	-.018403
4.31773E-07	-.260934	1.6093	-.19048	-1.75864E-02
4.41693E-07	-.278987	1.62165	-.170755	-1.84298E-02
4.55190E-07	-.271585	1.68133	-.176709	-1.76082E-02
4.62526E-07	-.291655	1.69289	-.176211	-1.83739E-02
4.71603E-07	-.285446	1.73255	-.170953	-1.77103E-02
4.76081E-07	-.300879	1.74072	-.177185	-1.82435E-02
4.80657E-07	-.297272	1.76051	-.171363	-1.78735E-02
4.82160E-07	-.303038	1.76345	-.174648	-1.80644E-02

***F

```
10 REM PROGRAM "VE4PLOT" TO PLOT V(E4) AGAINST I(IN) ON THE H.P. PLOTTER
15 FILES IINDATA, VE4DATA
20 DIM I[50], V[50]
25 FOR K = 1 TO 50
30 READ %1; I[K]
35 READ %2; V[K]
40 NEXT K
45 REM FIND MAX I(IN) AND SET = A
50 LET A = A1 = -1
55 FOR K = 1 TO 50
60 LET A1 = I[K] MAX A
65 LET A = A1
70 NEXT K
75 REM NOW FIND MIN I(IN) AND SET = B
80 LET B = B1 = 1
85 FOR K = 1 TO 50
90 LET B1 = I[K] MIN B
95 LET B = B1
100 NEXT K
105 REM NOW FIND MAX V AND SET = C
110 LET C = C1 = -10
115 FOR K = 1 TO 50
120 LET C1 = V[K] MAX C
125 LET C = C1
130 NEXT K
135 REM NOW FIND MIN V AND SET = D
140 LET D = D1 = 10
145 FOR K = 1 TO 50
150 LET D1 = V[K] MIN D
155 LET D = D1
160 NEXT K
165 REM NOW SCALE BOTH I AND V
170 LET S1 = (A - B)
175 LET S2 = (C - D)
180 FOR K = 1 TO 50
185 LET I[K] = (I[K] - B) * 1000 / S1
190 LET V[K] = (V[K] - D) * 1000 / S2
195 NEXT K
200 REM INTRODUCE ORIGIN OFFSET
205 LET S = 25
210 REM SET UP THE PLOT PARAMETERS
215 PRINT "]ON"
220 PRINT "]INIT"
225 PRINT "]SGL"
230 LET X = 1000
235 LET Y = 2700
240 GOSUB  2100
245 LET X = 7500
250 LET Y = 9200
255 GOSUB  2100
260 PRINT "]TERM"
265 PRINT "]SGS"
270 LET X = 1050
275 LET Y = 1050
280 GOSUB  2100
285 PRINT "]TERM"
290 PRINT "]SIZE"
295 LET X = 12.5
300 LET Y = 21
305 GOSUB  2100
310 PRINT "]TERM"
```

```
315 PRINT "]PEN"
320 PRINT "C"
325 PRINT "]FONT"
330 LET X = 0
335 LET Y = 5
340 GOSUB  2100
345 REM DRAW ENCLOSING FRAME
350 PRINT "]VEL"
355 LET X = 30
360 GOSUB  3000
365 PRINT "]TERM"
370 PRINT "]MOVE"
375 LET X = 0
380 LET Y = 0
385 GOSUB  2100
390 LET X = 0
395 LET Y = 1050
400 GOSUB  2100
405 LET X = 1050
410 LET Y = 1050
415 GOSUB  2100
420 LET X = 1050
425 LET Y = 0
430 GOSUB  2100
435 LET X = 0
440 LET Y = 0
445 GOSUB  2100
450 PRINT "]TERM"
455 REM MARK OFF AXES
460 PRINT "]VEL"
465 LET X = 36
470 GOSUB  3000
475 PRINT "]TERM"
480 PRINT "]PEN"
485 PRINT "A"
490 PRINT "]MOVE"
495 FOR K = 0 TO 100
500 LET S3 = 1 - SGN((K / 10) - INT(K / 10))
505 LET X = S + (10 * K)
510 LET Y = S + 1000 * ((ABS(D) / S2) MIN 1)
515 GOSUB  2100
520 LET X = S + (10 * K)
525 LET Y = S + (1000 * ((ABS(D) / S2) MIN 1)) - (5 + S3 * 10)
530 GOSUB  2100
535 LET X = S + (10 * K)
540 LET Y = S + 1000 * ((ABS(D) / S2) MIN 1)
545 GOSUB  2100
550 NEXT K
555 PRINT "]TERM"
560 PRINT "]MOVE"
565 FOR K = 0 TO 100
570 LET S3 = 1 - SGN((K / 10) - INT(K / 10))
575 LET X = S + (1000 * ABS(B)) / S1
580 LET Y = S + 1000 - (10 * K)
585 GOSUB  2100
590 LET X = S + (1000 * ABS(B)) / S1 + (5 + S3 * 10)
595 LET Y = S + 1000 - (10 * K)
600 GOSUB  2100
605 LET X = S + (1000 * ABS(B)) / S1
610 LET Y = S + 1000 - (10 * K)
615 GOSUB  2100
620 NEXT K
625 PRINT "]TERM"
630 REM LABEL AXES WITH TITLES
```

```
635 PRINT "]MOVE"
640 LET X = 50 + (1000 * ABS(B)) / S1
645 LET Y = 1012.5
650 GOSUB  2100
655 PRINT "]TERM"
660 PRINT "]LABEL"
665 PRINT "]SF"
670 PRINT "(SCALED) VOLTAGE"
675 PRINT "]STERM"
680 PRINT "]MOVE"
685 LET X = 825
690 LET Y = 1000 * ((ABS(D) / S2) MIN 1) - 15
695 GOSUB  2100
700 PRINT "]TERM"
705 PRINT "]LABEL"
710 PRINT "]SF"
715 PRINT "(SCALED) CURRENT"
720 PRINT "]STERM"
725 REM LABEL GRAPH WITH TITLES & SCALING DATA
730 PRINT "]PEN"
735 PRINT "B"
740 PRINT "]MOVE"
745 LET X = 762.5
750 LET Y = 260
755 GOSUB  2100
760 PRINT "]TERM"
765 PRINT "]LABEL"
770 PRINT "]SF"
775 PRINT "PHASE-NORMALIZED"
780 PRINT "GRAPH OF V(E4)"
785 PRINT "AGAINST I(IN)"
790 PRINT
795 PRINT "V(MAX) = "; C
800 PRINT "V(MIN) = "; D
805 PRINT "I(MAX) = "; A
810 PRINT "I(MIN) = "; B
815 PRINT
820 PRINT "D.C.SALTER, OXFORD"
825 PRINT "]STERM"
830 REM NOW LINK UP DATA POINTS
835 PRINT "]PEN"
840 PRINT "D"
845 PRINT "]VEL"
850 LET X = 30
855 GOSUB  3000
860 PRINT "]TERM"
865 PRINT "]MOVE"
870 FOR K = 1 TO 50
875 LET X = S + I[K]
880 LET Y = S + V[K]
885 GOSUB  2100
890 NEXT K
895 LET X = S + I[1]
900 LET Y = S + V[1]
905 GOSUB  2100
910 PRINT "]TERM"
915 PRINT "]LABEL"
920 PRINT "]AFK"
925 PRINT "]STERM"
930 PRINT "]OFF"
935 STOP

***F
```

APPENDIX E: AN ANALYSIS OF THE ANALYSER

Appendix E consists of material relevant to Section 8.5, namely, our 1976 agreement with Plessey Microsystems Ltd., a copy of the assessment of the Analyser made by the medical electronics consultancy Lauer GmbH, as sent by Vick International to Plessey, and various photographs taken by Lauer to demonstrate that there were indeed considerable grounds for dissatisfaction with the state in which the Analyser was - eventually - delivered to us.

[redacted]

OUTLINE SPECIFICATION

FFT IMPEDANCE ANALYSER:

Introduction

The FFT Impedance Analyser described in this outline specification is designed to enable the clinical measurement of skin impedance to be carried out quickly, efficiently and accurately. The techniques used in the instrument are those described by D.C. Salter in his design document dated 8.8.76, with engineering adaptations which have been suggested by Plessey. A block diagram of the system, as previously envisaged, is shown in the accompanying sketch.

Specification

Physical

Size:	19" wide, 10" high, 12" deep
Power:	240 volts AC
Mechanical:	The instrument will be built to prototype standards. Proprietary commercial equipment will be used where possible.

Functional

(1) The device will sample 1024 real points from each of five channels including the input stimulating channel using a sampling technqiue.

(2) The device will perform the Fast Fourier Transform on each of the channels and enable the display of the following calculated parameters:-

  (a) D.C. Polarization level for each channel.

  (b) The display (selectable) of Z and Ø for nth order harmonic.

  (c) Display (selectable) of the percentage of harmonic distortion to the nth order harmonic.

(3) The stimulating frequency will be variable from DC to 50KHz (minimum), (100KHz probable). The frequency of measurement may be selected from the front panel.

(4) Iin will be selectable from the front panel in 6 settings, from 1 to 20 Micro Amps (into an impedance of <100KΩ).

(5) The design and construction of the instrument will be to prototype laboratory standards.

(6) A simple digital output interface will be provided. This interface will be interrogated by an external minicomputer.

Warranty

The instrument will be serviced by Plessey Microsystems free of charge for one year from the date of delivery. Thereafter the instrument will be repaired by Plessey at the costs and rates applying at that time.

Documentation

Documentation supplied with the instrument will be : detailed engineering sketches for all circuits designed specifically by Plessey for this instrument, a handbook giving operational details of the instrument and listings of all the software developed for this application.

G.T. TOMLINS

29th. October, 1976

GENERAL CONDITIONS OF SALE IN THE UNITED KINGDOM

1. EFFECT

These conditions are subject to any special stipulations set out by Supplier in the Contract documents. The said Conditions and stipulations will prevail over any put forward by the Buyer unless it is otherwise agreed in writing.

2. PRICES

Unless otherwise expressly provided the prices stated are for delivery ex works and do not include for packing to Supplier's normal standards. Unless otherwise defined the prices stated do not include any V.A.T. or other taxes chargeable in respect of the supply or purchase of the goods or services and any such taxes shall be added to the prices stated. Buyer shall not be entitled to the prices stated where Supplier agrees to vary quantities or delivery rates from those specified. While Supplier will endeavour to maintain prices quoted he reserves right to increase them proportionately to increases in cost of labour and/or materials taking effect between quotation and delivery.

3. DELIVERY

(a) If Supplier delivers the goods to Buyer's premises free, then delivery under the Contract shall be at the time and place of actual delivery at Buyer's premises.

(b) Unless the goods are delivered free as mentioned in 3(a) above Supplier will give Buyer seven days notice that they are ready for collection at Supplier's premises and delivery shall be deemed to take place there when Buyer or his carrier collects the goods or at the close of business on the seventh day following despatch of such notice, whichever be the earlier PROVIDED that Buyer shall not be obliged to take delivery before the agreed delivery date.

(c) Time shall not be of the essence in relation to delivery. Supplier shall not be under any liability in respect of delay in delivery arising from industrial dispute or causes outside his control and may claim extension for such delay. Liability for proven loss due to delay arising from other causes shall not exceed to any severable part and shall in any event not exceed the amount of the Contract price for the delayed goods.

4. PROPERTY AND RISK

Property in and risk incidental to the goods shall pass to Buyer with delivery.

5. PAYMENT

Buyer shall make full payment to Supplier of the Contract price for the appropriate parts thereof where delivery is by instalments) by the 15th day of the month following the date of invoice unless otherwise stated hereon PROVIDED that Buyer shall not be obliged to pay before the goods are ready for delivery.

6. STORAGE AND CARRIAGE

Failing collection after notice under 3(b), Supplier will store the goods [illegible] loss of business or the seventh day mentioned in 3(b) and thereafter may either:—

(a) store the goods for Buyer but without liability for any loss or damage occurring after delivery date (unless caused by Supplier's negligence) for which storage Buyer agrees to pay as an addition to the price all reasonable charges after such seventh day; and/or

(b) as Buyer's agent arrange for carriage of the goods to Buyer together with transit insurance. These arrangements shall be deemed to be made at Buyer's request and pursuant to a contract separate from the sale Contract and the cost thereof shall be reimbursed by him to Supplier pursuant to such separate contract.

7. DRAWINGS AND SPECIFICATIONS

Buyer shall make good to Supplier any loss arising from unreasonable delay by Buyer in furnishing adequate and suitable specifications drawings, parts or materials required to enable Supplier to proceed.

8. LOSS, SHORTAGE OR DAMAGE

No claim for non-delivery will be considered unless received in writing by Supplier within 10 days from date of his Advice Note or equivalent document nor for shortage or damage unless received in writing by Supplier and also by any carrier within five days from date of actual receipt of the goods by Buyer (or his nominee).

9. GUARANTEE

Supplier guarantees to replace or (at his option) repair any goods proved to his reasonable satisfaction to have failed within twelve months of delivery by reason of faulty materials or workmanship used in their manufacture PROVIDED

(a) this guarantee shall not extend to failures by reason of defects which ought reasonably to have been discovered if inspection and or test of the goods had been practicable and had been carried out by Buyer within 14 days after delivery but were not reported to Supplier within that time.

(b) Buyer informs Supplier promptly on discovery of the alleged defect and promptly returns the goods, carriage paid with full written report on the defect unless Supplier agrees to inspect and replace or repair in situ.

(c) the goods have been stored, installed maintained and used properly having regard in particular to Supplier's and other agreed applicable specifications and instructions.

(d) Buyer shall not be entitled to the foregoing guarantee in relation to any goods or parts thereof obtained by Supplier from another.

(e) Buyer shall refund to Supplier the cost to Supplier of any replacement repair or redelivery of the goods effected by the Supplier where the defect is not within the scope of this guarantee.

Buyer shall have no right to reject later than 14 days following delivery and no other rights than as stated in this Condition in respect of defects. All other express or implied conditions warranties and other liability howsoever arising under statute or at common law in respect of quality, fitness, condition, use, trade or other description, specification or representation of or relating to the goods supplied are hereby excluded.

10. TERRITORIAL RESTRICTIONS

Buyer shall not without express written approval of Supplier (which shall not be unreasonably withheld) export or use the goods or sell or hire them to a person who to his knowledge intends to export or use them, outside the United Kingdom except as parts of larger assemblies or as spares or replacement parts for larger assemblies previously exported. This restriction shall not however prevent export use sale or hire of the goods in any country within the E.E.C.

11. PATENTS ETC INFRINGEMENT

Notwithstanding any approval under 10 Supplier shall (in lieu of all other liability to Buyer for loss where patents registered designs and similar rights have been infringed by use or sale of the goods) indemnify Buyer against claims (including the costs thereof) by owners or licensees of United Kingdom patents and registered designs published at the date hereof for infringement thereof by use or sale of the goods PROVIDED —

(a) this indemnity shall not extend to infringements resulting from use or adoption by Supplier of Buyer's parts, designs or specifications or from use or sale in combination with other items where infringements would not have otherwise occurred.

(b) Buyer shall immediately inform Supplier of claims, shall make no settlement and shall permit Supplier alone (and at Supplier's expense) to deal with claims.

12. COPYRIGHT AND CONFIDENTIALITY

The copyright in all Supplier's documents (including drawings) furnished to Buyer for the purposes of this Contract shall at all times remain vested in Supplier and neither they nor their contents shall be used without Supplier's express written consent for any purpose other than that for which they were furnished.

13. TOOLS, DIES MOULDS ETC.

Any tools, dies, moulds, etc. used by the Supplier for the purpose of his performance of this Contract will be charged at part cost only and will remain the property of the Supplier.

14. DETERMINATION OF CONTRACT

If the Buyer shall break any provision of this or any other Contract with Supplier, or suffer distress or execution, or commit an act of bankruptcy, make arrangement with creditors or go into liquidation (except for amalgamation or reconstruction) or have a receiver appointed, Supplier may (without prejudice to any other claim or remedy) suspend performance of, or determine this or any other such Contract by written notice and shall be entitled to payment for the goods already delivered, work in progress and tooling costs under the Contract in question at the Contract rate, or (if none) at a rate reasonably based on the price in question.

15. LAW

The Contract shall be governed by English Law.

16. ARBITRATION

All differences between Supplier and Buyer arising out of the Contract shall (except where by its terms Supplier's decision is to be final and binding) be referred to the arbitration of two persons or their umpire in accordance with the provisions of the Arbitration Act 1950.

With Compliments

[redacted]

Dear Mr Holmes,

We have received from our consultant G. A. Lauer a report referring to his examination of the Fourier Transformation impedance analyser manufactured by Plessey according to specifications given by D. ~~Slater~~ Salter (Oxford).

The report was as follows:-

From: Ing G. A. Lauer & J. Simon,
Consultant Electronic Engineers,
LAUER GMBH,
(Medzinische Elektronik),
Gross Gerau,
Germany.

1.1. The generator sometimes and unpredictably gives continuous wavetrains - contrary to the design and information previously supplied by Plessey. The electrical output to the electrodes should stop after a pre-set time.

1.2. The apparatus gives electrical shocks. G. Lauer has tried it on his own skin and found on the fore-arm that these were not severe. D. Salter has tried other body sites and found the shocks intolerable. On patients, however, especially older ones with higher skin sensitivity, a considerable discomfort, and various degrees of psycho-galvanic skin response could result. Consequently, volunteers must be informed before the test about these sensations. Volunteers who are disturbed by the electrical shock may refuse to participate further in the present test or subsequent tests.

Another worry would be including, inadvertantly, a patient with high emotional or circulatory lability, who could, in an extreme case, suffer from a more serious health damage, or, at ~~best~~ last, claim to have been so affected.

1.3. The photographic documentation shows that the output wavetrains do not correspond to the original design of D. Salter. In particular, spikes, continuous wavetrains and abrupt cut offs of a wavetrain could be observed and were documentated photographically. We believe that there could be even more background noise and high frequency waves at the output than could be shown on the oscilloscope. In support of this hypothesis, D. Salter said that he heard frequency noise on a receiver near the output terminals.

Contd..../

1.4. The existing wiring diagram is very poor, incomplete and does not correspond to the actual design. Obviously some later alterations have not been noted on the diagram. On the other hand some parts that are drawn on the diagram have not been built in, (e.g. capacitors against parasitic oscillations in the power supply!) Our photographs show that at least some delicate parts of the equipment have been built on an experimental platine of Veroboard.

1.5. In vitro tests using an external test net-work instead of biological material demonstrated that the results available from the rear Cannon socket could only be made to correspond with results available from the L.E.D. display when the net-work was purely resistive.

When a capacitor was included in the net-work to more closely simulate the equivalent circuit of skin, no sense could be made of the rear socket results, even though the front panel results still made sense.

2. Comments and proposals

2.1. (ad 1.1) It has been an idea of J. Simon (my colleague) to alter the oscillator part of the Plessey equipment with an additional gate to suppress oscillations, when they are not wanted by the master control of the computer. This will be called Clock 1 suppression and could be rather easily added. This eliminates continuous wavetrains in any case.

2.2. (ad 1.2) The sources of spikes should be located in the Plessey equipment. Due to poorly written documentation of this equipment, the help of Plessey specialists will be needed. If it is not possible to eliminate all spikes, we should add an output waveshape control which is in fact a semi-conductor low pass filter, which cuts off all frequencies which are higher than the maximum output frequency. This kind of active filter does not alter the waveshape the equipment has been designed for. In theory, the remaining voltages and current will no longer do any harm to the person under test.

2.3. (ad 1.3) See 2.2. and note the fact that a cut off in time by Clock 1 suppression could not cause high risetimes if done exactly at the zero of a wavetrain.

2.4. (ad 1.4) It is no use to go into too much detail concening the circuitry here, as it would take too much time to follow all the theoretical path-ways of the inventor. We should, however, try to find sources of noise, parasitic oscillations and wrong output. If this is not entirely successful, it should be better to suppress them by additional electronic means rather than alter the whole design.

2.5. (ad 1.5) The interface output must be cleared up. As far as we know, the interface section built into the Plessey equipment has nothing to do with the L.E.D. display which appears to be connected to another buffer and clock. However, all documentation of this is very poor (block diagrams only), and nobody knows if it corresponds to the definitive version.

3. Conclusion

The existing equipment is not yet ready to deliver any reliable results. Even after checking the programme considerable additional hardware problems will still be interfering. Thus, it is worthwhile trying to overcome these problems by small alterations and additional electronics.

****

Contd...../

There is also a port-folio of photographs available to substantiate these findings. This has been shown to I. Holmes

Yours sincerely,

J. Short
Dermatologist
VICK INTERNATIONAL
E/A DIVISION

This report has been examined and confirmed by D. Salter who was present at the time of this investigation.

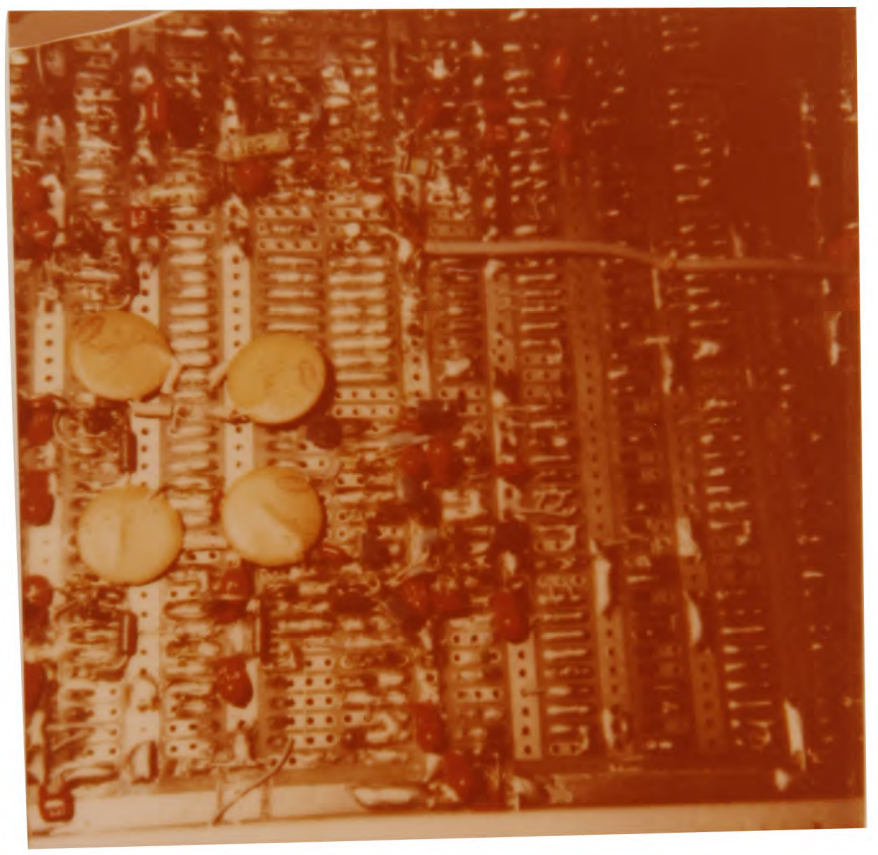

Fig. E.I Poor, almost "breadboarded" workmanship in the analogue section, producing a circuit which did not correspond to the wiring diagram.

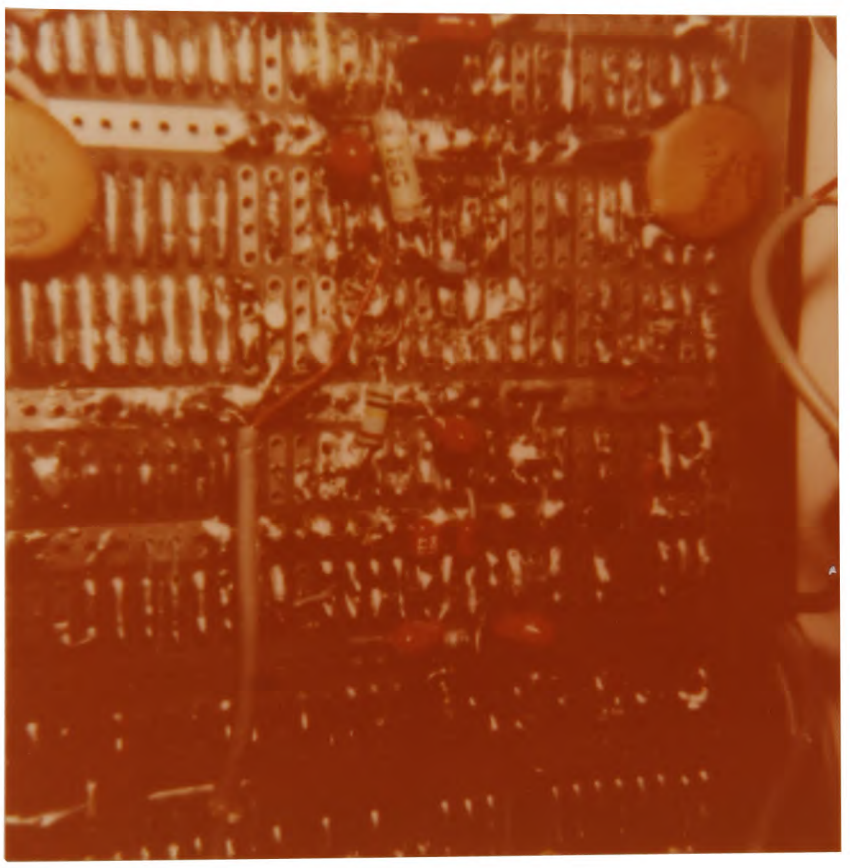

Fig. E.II A close-up of the same poor workmanship.

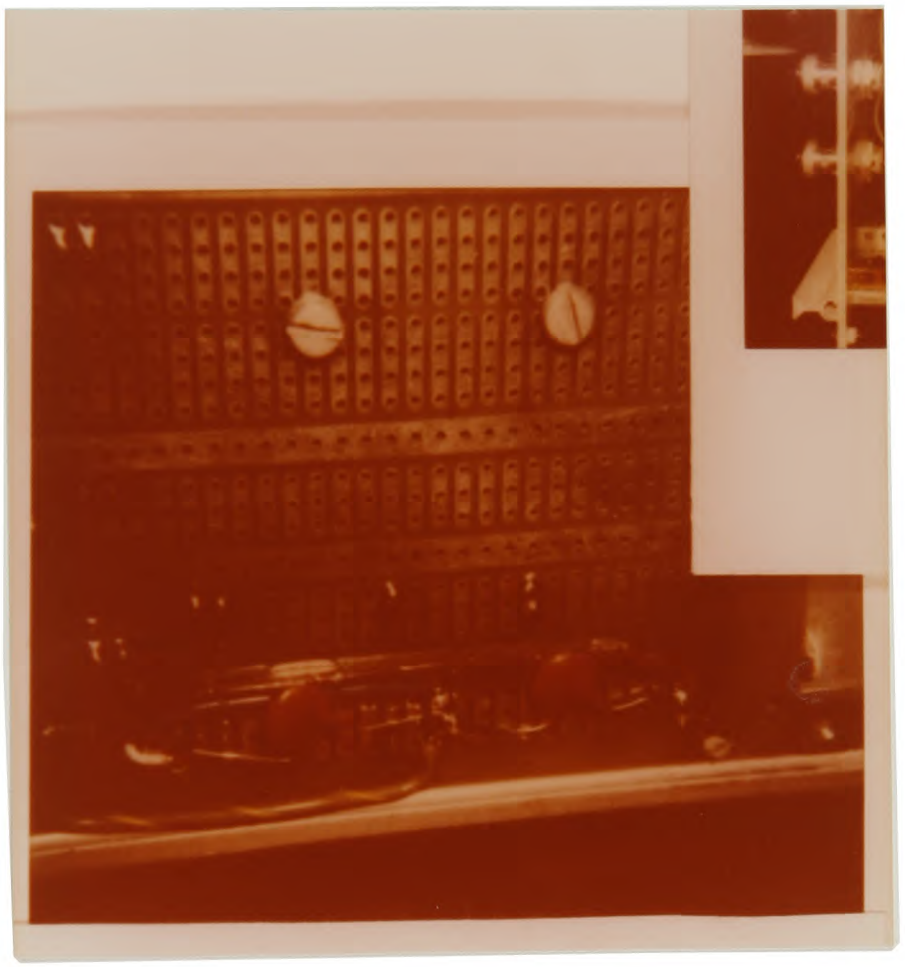

Fig. E.III These capacitors needed to be added to the DC - DC converters to make the actual circuit correspond to the "official" wiring diagram.

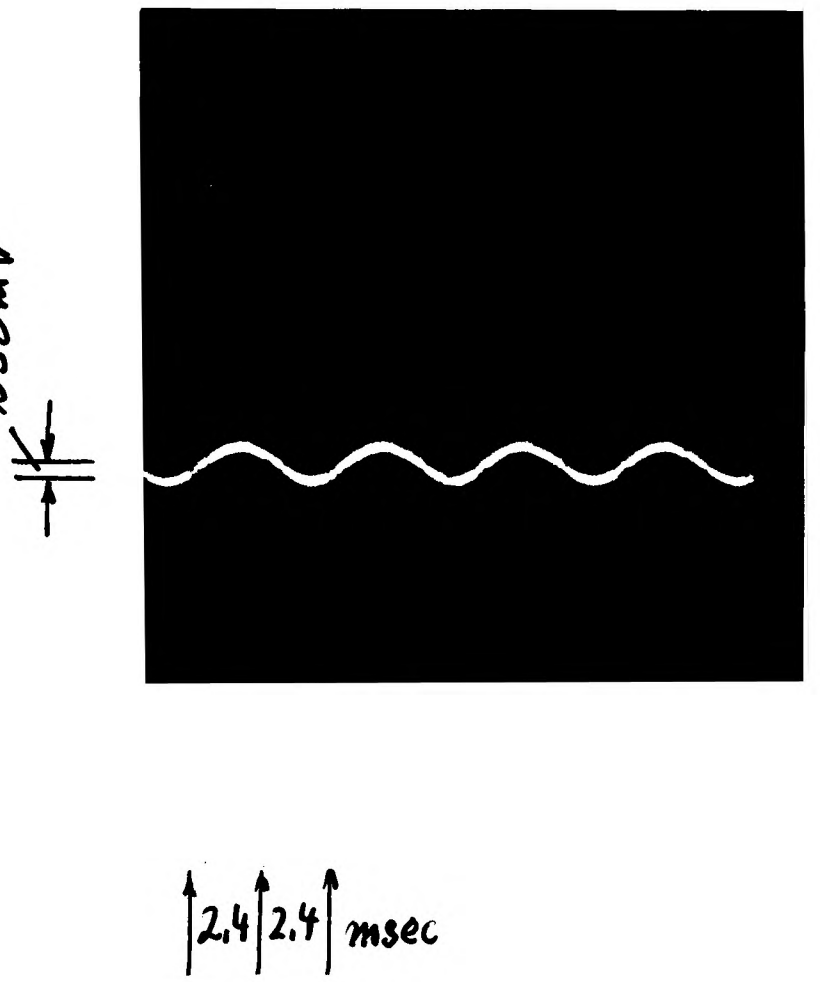

Fig. E.IV Even with the capacitors added, the output wavetrains still sometimes contained large spikes.

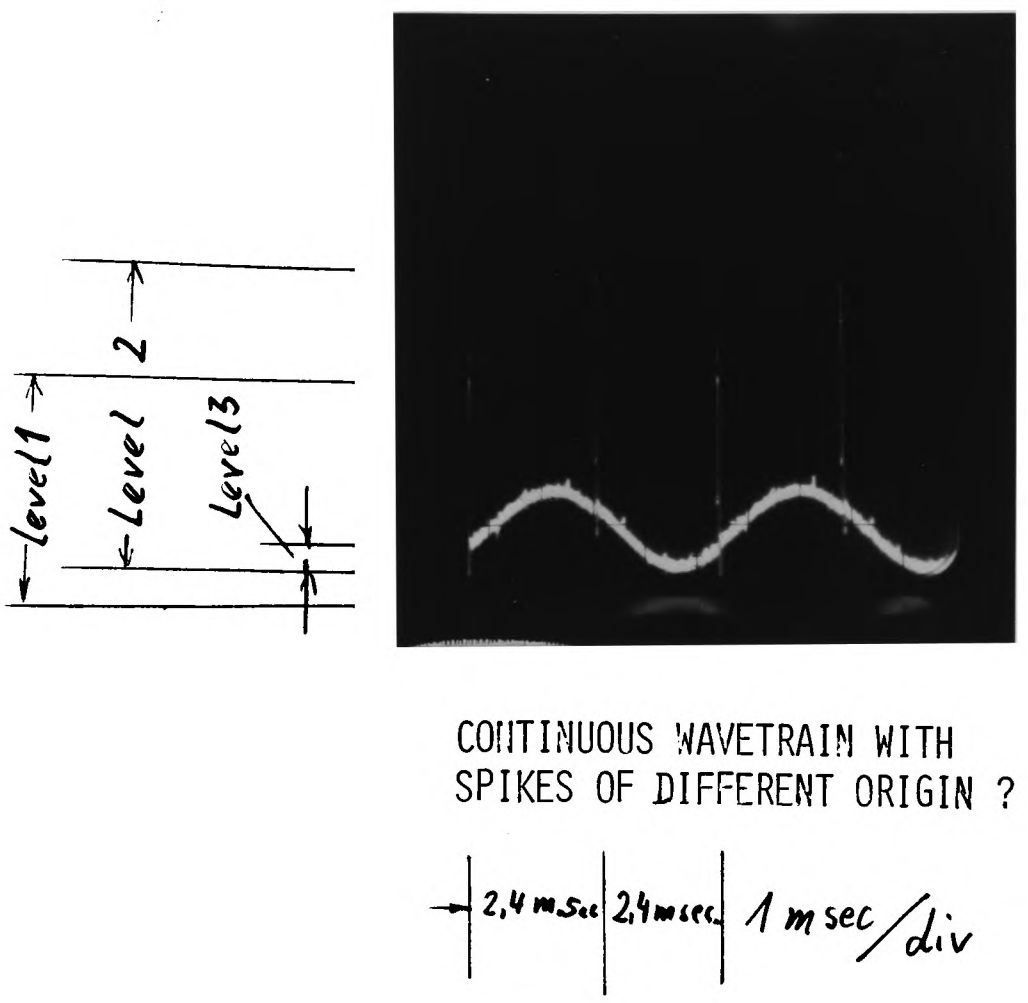

Fig. E.V Another photograph of output spikes. In such cases VHF noise was associated with the production of a wavetrain, and could be monitored by a radio receiver if a piece of unshielded wire was attached to the Analyser output terminals.

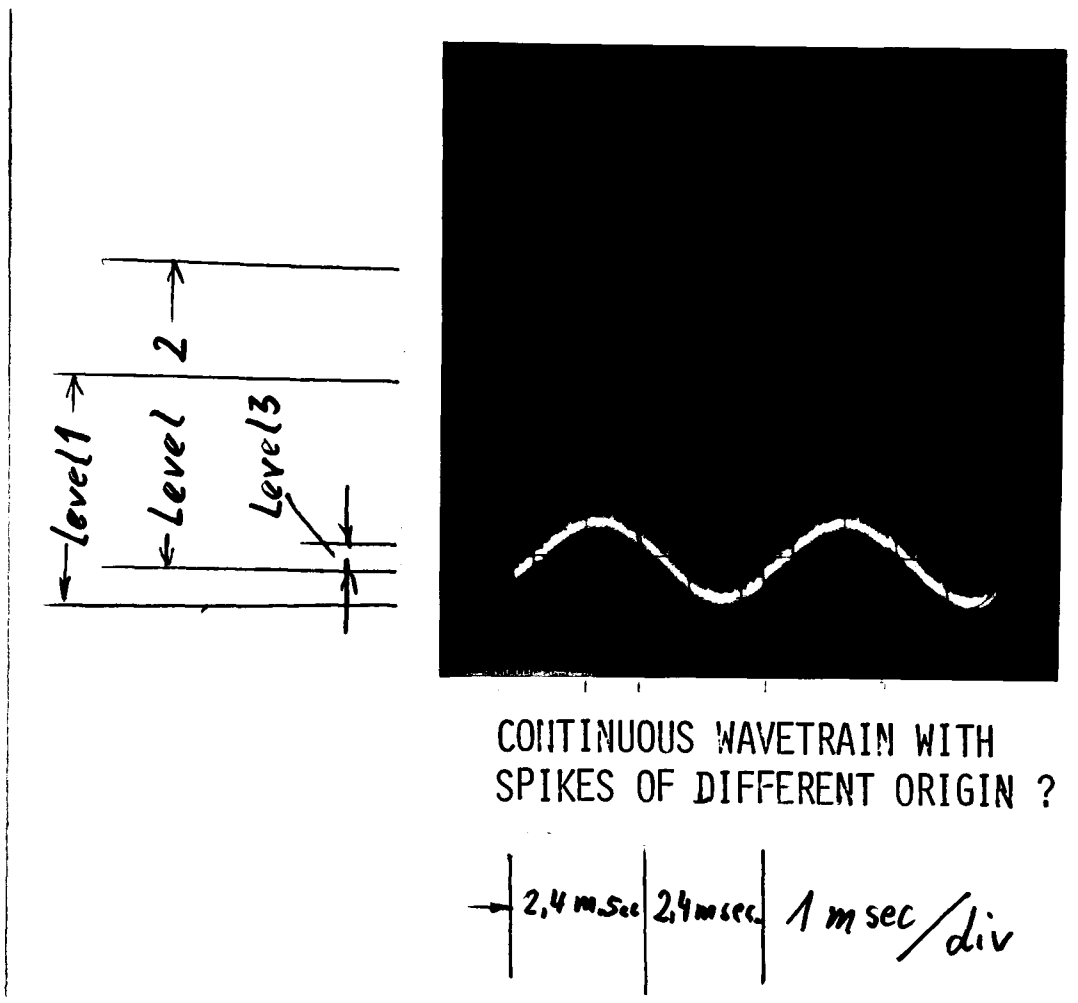

Fig. E.V Another photograph of output spikes. In such cases VHF noise was associated with the production of a wavetrain, and could be monitored by a radio receiver if a piece of unshielded wire was attached to the Analyser output terminals.

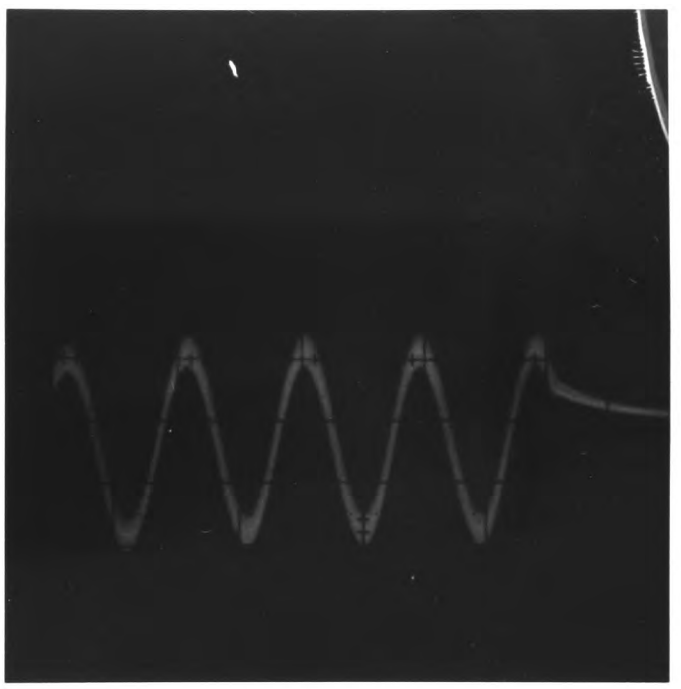

Fig. E.VI Sometimes the wavetrain did not end at a zero-crossing as my design intended it to do.

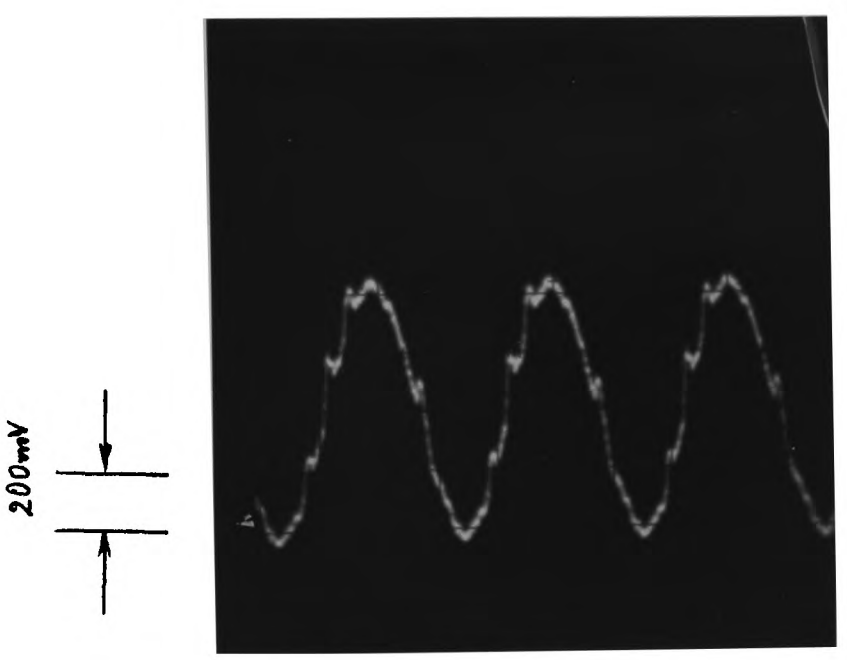

Fig. E.VII Sometimes indeed the wavetrain did not end at all, but simply continued, contrary to the intended behaviour. Such 'continuous wavetrains' had a rather distorted and spiky form.

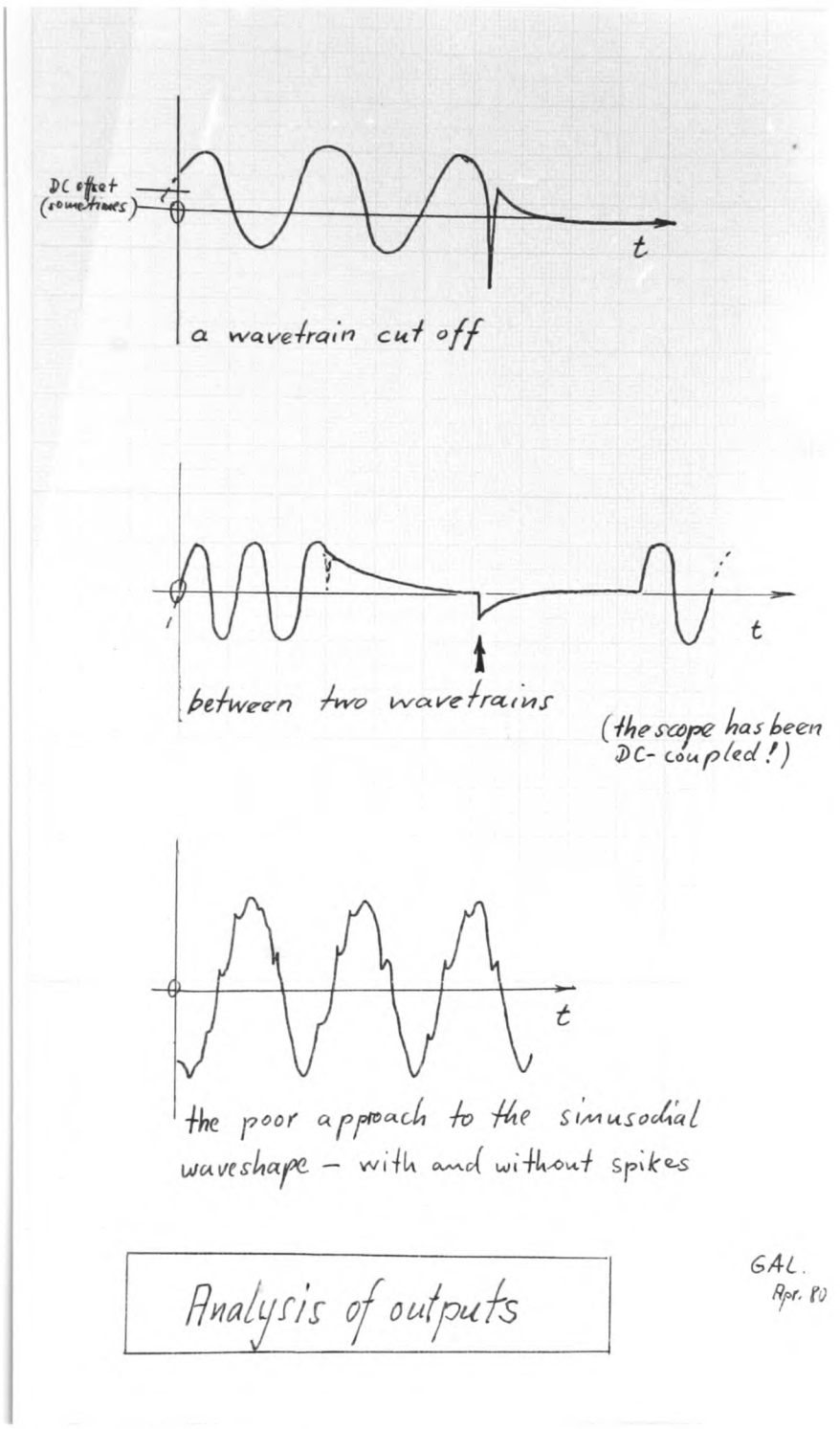

Fig. E.VIII Another extract from the Lauer report.

APPENDIX F: PROGRAM "PIKE"

```
10 REM PROGRAM "PIKE" TO CALCULATE THE BEHAVIOUR
20 REM OF THE SHUNTED CTRW-PIKE MODEL.
30 FILES BANDDATA
40 DIM R[3], Y[400], S[400], P[400], Q[400], F[43]
50 REM SET MAX ACTIVATION ENERGY, W(MAX) = W1
60 LET W1 = .45
70 REM SET TEMPERATURE, T
80 LET T = 300
90 REM SET PREFACTOR C
100 LET C = .00001
110 REM SET BOLTZMANN'S CONSTANT, K
120 LET K = 8.6171E-5
130 REM CALCULATE S(MIN)
140 LET S1 = (-W1) / (K * T)
150 REM CALCULATE S(MAX)
160 LET S2 = S1 / 100
170 REM SET MEAN ENTROPY UNIT VALUE W3
180 LET W3 = 36
190 LET W4 = (W3 * T) / 23053
200 LET W5 = EXP(W4 / (K * T))
210 LET W6 = 4.1356E-15 / (K * T)
220 LET T1 = W6 * W5
230 REM CALCULATE MAXIMUM TIME CONSTANT T2
240 LET B1 = 2 * T
250 LET B2 = (1 / T) - (1 / B1)
260 LET B3 = T1 * EXP((W1 * B2) / K)
270 LET T2 = B3 * EXP(W1 / (K * B1))
280 REM CALCULATE MOST LIKELY ACTIVATION ENERGY W(PEAK) = W2
290 LET W2 = W1 - (C / 4) ^ (1 / 3)
300 REM SET THE PARALLEL SHUNT CONDUCTIVITY
310 LET C0 = 1.2E-8
320 REM NOW SET
330 REM P1 = (N*E*E*(1/6)*[D(RMS)]^2)/K1
340 REM WHERE K1 IS THE CGS VALUE OF BOLTZMANN'S CONSTANT
350 REM ( = 1.3805E-16 ERG/DEG.)
360 LET P1 = .0001
370 LET C1 = P1 / T
380 REM SET THE FREQUENCIES FOR WHICH THE PREDICTIONS
390 REM OF THE MODEL ARE TO BE CALCULATED:
400 FOR J = 0 TO 6
410 LET B = .001 * (10 ^ J)
420 LET F[1 + J * 6] = B
430 LET F[2 + J * 6] = 1.5 * B
440 LET F[3 + J * 6] = 2 * B
450 LET F[4 + J * 6] = 3 * B
460 LET F[5 + J * 6] = 5 * B
470 LET F[6 + J * 6] = 7 * B
480 NEXT J
490 LET F[43] = 100000
500 REM CALCULATE ABSCISSAE
510 LET H = (S2 - S1) / 399
520 FOR I = 1 TO 400
530 LET S[I] = S1 + H * (I - 1)
540 LET B4 = (-K * T * S[I])
550 LET B5 = EXP(-(C * (B4 ^ -3)) / 3)
560 LET B6 = B4 ^ -4
570 LET P[I] = K * T * C * B6 * B5
580 NEXT I
590 REM NOW CALCULATE INTEGRAL "A"
600 LET J = 1
610 FOR I = 1 TO 400
```

```
620 LET Y[I] = P[I]
630 NEXT I
640 GOSUB  1020
650 PRINT " BEHAVIOUR OF THE SHUNTED C.T.R.W. MODEL FOR"
660 PRINT " F(S)              =  "; " PIKE"
670 PRINT " ENTROPY UNITS     =  "; W3
680 PRINT " T1                =  "; T1
690 PRINT " W(MAX)            =  "; W1
700 PRINT " W(PEAK)           =  "; W2
710 PRINT " PREFACTOR C       =  "; C
720 PRINT " TEMPERATURE       =  "; T
730 PRINT " C(ZERO)           =  "; C0
740 PRINT " P1                =  "; P1
750 PRINT
760 PRINT " FREQ.", " M(EFF)", " M1(EFF)", " R(S)", " -X(S)"
770 PRINT
780 LET L2 = 0
790 LET L = 0
800 REM SET ANGULAR FREQUENCY
810 FOR Z = 1 TO 43
820 LET W = 6.2832 * F[Z]
830 IF L = 1 THEN 1170
840 FOR I = 1 TO 400
850 LET Q[I] = W * T2 * EXP(S[I])
860 NEXT I
870 REM NOW CALCULATE PSI'
880 LET J = 2
890 FOR I = 1 TO 400
900 LET Y[I] = (P[I] / R[1]) / (1 + (Q[I] ^ 2))
910 NEXT I
920 GOSUB  1020
930 REM THIS IS PSI'
940 REM NOW CALCULATE PSI"
950 LET J = 3
960 FOR I = 1 TO 400
970 LET Y[I] = (P[I] * Q[I] / R[1]) / (1 + (Q[I] ^ 2))
980 NEXT I
990 GOSUB  1020
1000 REM THIS IS PSI"
1010 GOTO  1090
1020 REM SUMMATION SUBROUTINE:
1030 LET S = 0
1040 FOR I = 1 TO 400
1050 LET S = S + Y[I]
1060 NEXT I
1070 LET R[J] = S
1080 RETURN
1090 LET M = (1 - (2 * ATN(R[2] / R[3])) / 3.1416)
1100 REM TEST FOR ENTHALPY CUT-OFF
1110 IF Z >= 25 AND M >= L2 THEN 1170
1120 LET L1 = Z
1130 LET L2 = M
1140 LET L3 = R[2]
1150 LET L4 = R[3]
1160 GOTO  1230
1170 LET L = 1
1180 LET M = L2
1190 LET L5 = L3 / (F[L1] ^ (-M))
1200 LET L6 = L4 / (F[L1] ^ (-M))
1210 LET R[2] = L5 * (F[Z] ^ (-M))
1220 LET R[3] = L6 * (F[Z] ^ (-M))
1230 REM NOW CALCULATE THE COMPONENTS OF THE DIFFUSION COEFFICIENT
1240 LET D1 = (1 - R[2]) ^ 2 + R[3] ^ 2
1250 LET D2 = W * R[3]
```

```
1260 LET D3 = W * (R[2] * (1 - R[2]) - R[3] ^ 2)
1270 LET D4 = D2 / D1
1280 LET D5 = D3 / D1
1290 REM NOW CALCULATE THE COMPONENTS OF CONDUCTIVITY
1300 LET C2 = C0 + C1 * D4
1310 LET C3 = C1 * D5
1320 LET M1 = (1 - (2 * ATN(C3 / C2)) / 3.1416)
1330 REM NOW CALCULATE THE COMPONENTS OF IMPEDANCE
1340 REM INCORPORATING THE SKIN-DIMENSIONS CORRECTION FACTOR
1350 LET Z1 = C2 ^ 2 + C3 ^ 2
1360 LET Z2 = C2 / (1000 * Z1)
1370 LET Z3 = C3 / (1000 * Z1)
1380 PRINT F[Z], M, M1, Z2, Z3
1390 PRINT %1; F[Z], Z2, Z3
1400 NEXT Z
1410 PRINT %1; W3, T1, W1, W2, C, T, C0, P1
1420 END

***F
```

PART VII: REFERENCES

REFERENCES

ABRAMSON, H.A. AND GORIN, M.H. (1940a): Skin permeability.
Cold Spring Harb. symp. quant. Biol. 8, 272-279.

ABRAMSON, H.A. AND GORIN, M.H. (1940b): Skin reactions. IX. The electrophoretic demonstration of the patent pores of the living human skin; its relation to the charge of the skin.
J. Phys. Chem. 44, 1094-1102.

ADAMSON, A.W. (1967): "Physical Chemistry of Surfaces".
2nd edition, Interscience Publishers, New York.

AGIN, D. (1967): Electroneutrality and electrodiffusion in the squid axon.
Proc. Natl. Acad. Sci. 57, 1232-1238.

ALBERY, W.J. (1975): "Electrode Kinetics".
Clarendon Press, Oxford.

ALLENBY, A.C., FLETCHER, J., SCHOCK, C., AND TEES, T.F.S. (1969): The effect of heat, pH and organic solvents on the electrical impedance and permeability of excised human skin.
Br. J. Dermatol. 81, Supplement 4, 31-39.

ALMASI, J.J. AND SCHMITT, O.H. (1974): Automated measurement of bioelectric impedance at very low frequences.
Computers Biomed. Res. 7, 449-456.

ANONYMOUS (1966): Electrical skin test for lung cancer.
Biomedical Engineering, 1, 192-193.

AUSTIN, I.G. AND MOTT, N.F. (1969): Polarons in crystalline and non-crystalline materials.
Adv. Phys. 18, 41-102.

BAKER, H. (1978): The skin as a barrier.
In "Textbook of Dermatology" (Eds. Rook, Wilkinson and Ebling), Ch. 11, 3rd Edn., Blackwell Scientific Publications, Oxford.

BAKER, L.E. (1971): Biomedical applications of electrical impedance measurements.
In "I.E.E. Medical Electronics Monographs 1-6" (Ed. B.W. Watson), Ch. 1, Peter Peregrinus Ltd., Stevenage.

BALL, J.L. AND MOORE, A.D. (1980): "Essential Physics for Radiographers".
Blackwell Scientific Publications, Oxford.

BARNETT, A. (1937): Basic factors involved in proposed electrical methods for measuring thyroid function: phase angle and impedance of skin.
West. J. Surg. 45, 540-554.

BARNETT, A. (1938): The phase angle of normal human skin.
J. Physiol. 93, 349-366.

BARNETT, A. (1939): Skin impedance findings in mental disease.
Proc. Soc. Exp. Biol. & Med. 41, 697-699.

BARNETT, A. (1940): Seasonal variations in the epidermal impedance of human skin.
Am. J. Physiol. 129, P306-P307.

BASS, L. AND MOORE, W.J. (1973): The role of protons in nerve conduction.
Prog. Biophys. Mol. Biol. 27, 143-171.

BAUCH, K. (1966): Ueber die Electrodermatographie nach Regelsberger.
Acta Neuroveg. 29, 229-249.

BAXTER, S. (1943): Electrical conduction of textiles.
Trans. Faraday Soc. 39, 207-214.

BEESON, P.B. AND McDERMOTT, W. (1975): "Textbook of Medicine".
14th edition., W.B. Saunders Co., Philadelphia.

BELL, D.J., COSTER, H.G.L., AND SMITH, J.R. (1975): Computer-based 4-terminal impedance-measuring system for low frequencies.
J. Physics E: Scientific Instruments 8, 66-70.

BERGSMANN, O. AND WOOLLEY-HART, A. (1973): Differences in electrical skin conductivity between acupuncture points and adjacent skin areas.
Am. J. Acupuncture, 1, 27-32.

BEVINGTON, P.R. (1969): "Data Reduction and Error Analysis for the Physical Sciences".
McGraw-Hill Book Company, New York.

BLANK, I.H. AND FINESINGER, J.E. (1946): Electrical resistance of the skin.
Arch. Neurol. Psychiat. 56, 544-557.

BOCKRIS, J. O'M. AND MATTHEWS, D.B. (1966): The mechanism of charge transfer at electrodes.
Proc. R. Soc. Lond. A292, 479-488.

BÖTTCHER, C.J.F. AND BORDEWIJK, P. (1978): "Theory of Electric Polarization. Vol. II. Dielectrics in Time-Dependent Fields".
Elsevier Scientific Publishing Co., Amsterdam.

BOTTELBERGHS, P.H. (1978): Low-frequency measurements on solid electrolytes and their interpretations.
Ch. 10, pp. 145-172 of "Solid Electrolytes"
ed. P. Hagenmuller and W. Van Gool.
Academic Press, London.

BRANIN, F.H. AND SMYTH, C.P. (1952): Microwave absorption and molecular structure in liquids. IX. Measurement in organic halides at 10-cm wavelength.
J. Chem. Phys. 20, 1121-1128.

BRAUN-FALCO, O. (1976): The initial psoriatic lesion.
Ch. 1 in "Psoriasis - Proceedings of the Second International Symposium",
ed. E.M. Farber and A.J. Cox.
Yorke Medical, New York.

BRIGHAM, E.O. (1974): "The Fast Fourier Transform".
Prentice-Hall, Englewood Cliffs, New Jersey.

BROADHURST, M.G. (1972): Dielectric properties of methyl stearate - a model crystalline polymer. In "Dielectric Properties of Polymers". ed. F.E. Karasz, Plenum Press, New York.

BROT, C. and DARMON, I. (1970): Orientational freedom of molecules in crystals. II. Higher-order transition by progressive decorrelation of orientations. A Monte-Carlo calculation. J. Chem. Phys. 53, 2271-2280.

BROWN, A.C. AND KASTELLA, K.G. (1965): The A.C. impedance of frog skin and its relation to active transport. Biophys. J. 5, 591-606.

BURTON, C.E., DAVID, R.M., PORTNOY, W.M. AND AKERS, L.A. (1974): The application of Bode analysis to skin impedance. Psychophysiol. 11, 517-525.

CAMBRAI , M. (1975): The role of essential fatty acids (EFA) in the regulatory processes of malpiglian cell membranes. J. Soc. Cosmet. Chem. 26, 485-496.

CAMBRAI, M. AND DO LINH, H. (1973): Phoreography, a new method of determining the effect of UV radiation on skin. J. Soc. Cosmet. Chem. 24, 3-14.

CAMBRAI, M. AND DO LINH, H.(1974): The role of living epidermal cells in the electrical properties of skin. J. invest. Dermatol. 62, 82-91.

CAMBRAI, M., CLAR, E.J., GROSSHANS, E. AND ALTERMATT, C. (1974): Skin impedance and phoreographic index in psoriasis. Arch. Dermatol. Res. 264, 197-211.

CAMPBELL, S.D. KRANING, K.K., SCHIBLI, E.G. AND MOMII, S.T. (1977): Hydration characteristics and electrical resistivity of stratum corneum using a non-invasive four-point electrode method (in vitro). J. Invest. Dermatol. 69, 290-295.

CHANDRASEKHAR, S. (1943): Stochastic problems in physics and astronomy. Rev. Mod. Phys. 15, 1-89.

CHERRY, E.C. AND RIVLIN, R.S. (1941): Non-linear distortion, with particular reference to the theory of frequency-modulated waves. Phil. Mag. (7th Ser.), 32, 265-281.

CLAR E.J., HER, C.P. AND STURELLE, C.G. (1973): Essai d'interpretation de la dispersion dielectrique basse frequence de la peau humaine. pp. 127-137 in "L'Impédance Bioélectrique Recherche et Applications Cliniques". Seminaire INSERM, Lyon, 7-8 December, 1972. INSERM, Paris.

CLAR, E.J., AND DUGAS DU VILLARD, X. (1975): Applications des mesures d'impédance cutanée à la cosmétologie. Labo-Pharma: Problèmes et Techniques, No. 240, 154-159.

CLAR, E.J., HER, C.P. AND STURELLE, C.G. (1975): Skin impedance and moisturization.
J. Soc. Cosmetic Chemists 26, 337-353.

CLAR, E.J., CAMBRAI, M. HEID, E., AND GROSSHANS, E. (1976): Les paramètres électrophysiologiques de l'épiderme dans le psoriasis. (Étude préliminaire).
Ann. derm. syph. 103, 291-295.

CLAUSEN, C., LEWIS, S.A., AND DIAMOND, J.A. (1979): Impedance analysis of a tight epithelium using a distributed resistance model.
Biophys. J. 26, 291-318.

COLE, K.S. (1928): Electric impedance of suspensions of spheres.
J. gen. Physiol. 12, 29-36.

COLE, K.S. (1932): Electric phase angle of cell membranes.
J. gen. Physiol. 15, 641-649.

COLE, K.S. (1933a): Electric conductance of biological systems.
Cold Spring Harb. Symp. quant. Biol. 1, 107-116.

COLE, K.S. (1933b): Electric excitation in nerve.
Cold Spring Harb. Symp. quant. Biol. 1, 131-138.

COLE, K.S. (1934): Alternating current conductance and direct current excitation of nerve.
Science 79, 164-165.

COLE, K.S. (1940): Permeability and impermeability of cell membranes for ions.
Cold Spring Harb. Symp. quant. Biol. 8, 110-122.

COLE, K.S. (1949): Some physical aspects of bioelectric phenomena.
Proc. nat. Acad. Sci. U.S.A., 35, 558-566.

COLE, K.S. (1968): Dielectric properties of living membranes.
In "Physical Principles of Biological Membranes"
(Eds. Snell, Wolken, Iverson and Lam), Paper 1, Gordon and Breach Science Publishers, London.

COLE, K.S. (1972): "Membranes, Ions and Impulses".
University of California Press, Berkeley.

COLE, K.S. AND COLE, R.H. (1941): Disperson and absorption in dielectrics. I. Alternating current characteristics.
J. chem. Phys. 9, 341-351.

COLE, K.S. AND COLE, R.H. (1942): Dispersion and absorption in dielectrics. II. Direct Current characteristics.
J. chem. Phys. 10, 98-105.

COLE, K.S. AND CURTIS, H.J. (1936): Electric impedance of nerve and muscle.
Cold Spring Harb. Symp. quant.Biol. 4, 73-89.

COLE, K.S. AND JAHN, T.L. (1937): The nature and permeability of grasshopper egg membranes. IV: The alternating current impedance over a wide frequency range.
J. Cell. Comp. Physiol. 10, 265-275.

COLE, K.S. AND GUTTMANN, R.M. (1942): Electric impedance of the frog egg.
J. gen. Physiol. 25, 765-775.

COLE, K.S., LI, C-L., and BAK, A.F. (1969): Electrical analogues for tissues.
Exp. Neurol. 24, 459-473.

COLE, R.H. (1965): Relaxation processes in dielectrics.
J. Cell. Comp. Physiol. 66, Suppl. 2, 13-20.

COPE, F.W. (1970): The solid-state physics of electron and ion transport in biology.
Adv. Biol. Med. Phys. 13, 1-42.

COSTER, H.G.L. (1965): A quantitative analysis of the voltage-current relationships of fixed-change membranes and the associated property of "punch-through".
Biophys. J. 5, 669-686.

COSTER, H.G.L. (1973a): The double fixed charge membrane. I. Low frequency dielectric dispersion.
Biophys. J. 13, 118-132.

COSTER, H.G.L. (1973b): The double fixed charge membrane. II. Solution-membrane ion partition effects and membrane potentials.
Biophys. J. 13, 133-142.

COSTER, H.G.L., GEORGE, E.P. AND SIMONS, R. (1969): The electrical characteristics of fixed charge membranes. Solution of the field equations.
Biophys. J. 9, 666-684.

DANIEL, V.V. (1967): "Dielectric Relaxation".
Academic Press, London and New York.

DARIER, J. et al. (1936): "Électro-physiologie".
In "Nouvelle Pratique Dermatologique".
ed. J. Darier et al., Vol. I, pp. 135-137.
Masson et Cie, Paris.

DAVIDSON, D.W. AND COLE, R.H. (1951): Dielectric relaxation in glycerol, propylene glycol, and n-propanol.
J. Chem. Phys. 19, 1484-1490.

DAWBER, J.G. AND MOORE, A.T. (1980): "Chemistry for the Life Sciences".
2nd edition, Macmillan, London.

DIGBY, P.S.B. (1965): Semi-conduction and electrode processes in biological material. I. Crustacea and certain soft-bodied forms.
Proc. R. Soc. Lond. B, 161, 504-525.

DORSCHEID, H.O. (1960): "Elektrobiologische Hautuntersuchungen bei inneren Erkrankungen insbesondere bei vegetativen Funktionsstörungen".
Abhandlungen über die Pathophysiologie der Regulationen, Heft. 4.
.E.B. Gustav Fischer Verlag, Jena.

DUKE, C.B. AND MAHAN, G.D. (1965): Phonon-broadened impurity spectra. I. Density of states.
Phys. Rev. 139A, 1965-1982.

EBBECKE, U. (1921): Die lokale galvanische Reaktion der Haut. (Über die Beziehung zwischen lokaler Reizung und elektrischer Leitfähigkeit.) Pflügers Archiv f. d. ges. Physiol. 190, 230-269.

EBBECKE, U. (1922): Über elektrische Hautreizung. Pflügers Archiv f. d. ges. Physiol. 195, 300-323.

EBBECKE, U. (1923): Über Gewebsreizung und Gefässreaktion. Pflügers Archiv f. d. ges. Physiol. 199, 197-216.

EDELBERG, R. (1967): Electrical properties of the skin. In "Methods in Psychophysiology", C.C. Brown, (ed.), Williams and Wilkins, Baltimore.

EDELBERG, R. (1968): Biopotentials from the skin surface: the hydration effect. Ann. N.Y. Acad. Sci. 148, 252-262.

EDELBERG, R. (1971): Electrical properties of skin. In "Biophysical Properties of the Skin". (Ed. H.R. Elden), Ch. 15, Wiley-Interscience, New York.

EDELBERG, R. (1977): Relation of electrical properties of skin to structure and physiologic state. J. invest. Dermatol. 69, 324-327.

EDELBERG, R. AND BURCH, N.R. (1962): Skin resistance and galvanic skin response. Arch. gen. Psychiat. 7, 163-169.

EDMINISTER, J.A. (1972): "Schaum's Outline of Theory and Problems of Electric Circuits". McGraw-Hill Book Company, New York.

EINTHOVEN, W. AND BIJTEL, J. (1923): Über Stromleitung durch den menschlichen Körper. Pflügers Archiv f. d. ges. Physiol. 198, 439-482.

EISENBERG, R.S., BARCILON, V., AND MATHIAS, R.T. (1979): Electrical properties of spherical syncytia. Biophys. J. 25, 151-180.

ELEY, D.D. (1968): Semiconducting biological polymers. Ch. 5 in "Organic Semiconducting Polymers", Ed. J.E. Katon, Dekker, New York.

ELLIOTT, S.R. (1977): A theory of a.c. conduction in chalcogenide glasses. Phil. Mag. 36, 1291-1304.

EPELBOIN, I., KEDDAM, M. AND LESTRADE, J.C. (1974): Faradaic impedances and intermediates in electrochemical reactions. Faraday Discussions Chem. Soc. 56, 264-275.

FARBER, A.S. AND HO, C.W. (1969): Wide-band network characterization by Fourier transformation of time-domain measurements. IEEE J. Solid-State Circuits, SC-4, 231-235.

FATT, P. (1964): An analysis of the transverse electrical impedance of striated muscle. Proc. R. Soc. Lond. B159, 606-651.

EBBECKE, U. (1921): Die lokale galvanische Reaktion der Haut. (Über die Beziehung zwischen lokaler Reizung und elektrischer Leitfähigkeit.) Pflügers Archiv f. d. ges. Physiol. 190, 230-269.

EBBECKE, U. (1922): Über elektrische Hautreizung. Pflügers Archiv f. d. ges. Physiol. 195, 300-323.

EBBECKE, U. (1923): Über Gewebsreizung und Gefässreaktion. Pflügers Archiv f. d. ges. Physiol. 199, 197-216.

EDELBERG, R. (1967): Electrical properties of the skin. In "Methods in Psychophysiology", C.C. Brown, (ed.), Williams and Wilkins, Baltimore.

EDELBERG, R. (1968): Biopotentials from the skin surface: the hydration effect. Ann. N.Y. Acad. Sci. 148, 252-262.

EDELBERG, R. (1971): Electrical properties of skin. In "Biophysical Properties of the Skin". (Ed. H.R. Elden), Ch. 15, Wiley-Interscience, New York.

EDELBERG, R. (1977): Relation of electrical properties of skin to structure and physiologic state. J. invest. Dermatol. 69, 324-327.

EDELBERG, R. AND BURCH, N.R. (1962): Skin resistance and galvanic skin response. Arch. gen. Psychiat. 7, 163-169.

EDMINISTER, J.A. (1972): "Schaum's Outline of Theory and Problems of Electric Circuits". McGraw-Hill Book Company, New York.

EINTHOVEN, W. AND BIJTEL, J. (1923): Über Stromleitung durch den menschlichen Körper. Pflügers Archiv f. d. ges. Physiol. 198, 439-482.

EISENBERG, R.S., BARCILON, V., AND MATHIAS, R.T. (1979): Electrical properties of spherical syncytia. Biophys. J. 25, 151-180.

ELEY, D.D. (1968): Semiconducting biological polymers. Ch. 5 in "Organic Semiconducting Polymers", Ed. J.E. Katon, Dekker, New York.

ELLIOTT, S.R. (1977): A theory of a.c. conduction in chalcogenide glasses. Phil. Mag. 36, 1291-1304.

EPELBOIN, I., KEDDAM, M. AND LESTRADE, J.C. (1974): Faradaic impedances and intermediates in electrochemical reactions. Faraday Discussions Chem. Soc. 56, 264-275.

FARBER, A.S. AND HO, C.W. (1969): Wide-band network characterization by Fourier transformation of time-domain measurements. IEEE J. Solid-State Circuits, SC-4, 231-235.

FATT, P. (1964): An analysis of the transverse electrical impedance of striated muscle. Proc. R. Soc. Lond. B159, 606-651.

FAULKNER, E.A. (1969): "Introduction to the Theory of Linear Systems", Chapman and Hall, London.

FINKELSTEIN, A. AND MAURO, A. (1963): Equivalent circuits as related to ionic systems.
Biophys. J. 3, 215-237.

FOWLES, D.C. (1974): Mechanisms of electrodermal activity.
In "Bio-electric Recording Techniques".
(Eds. R.F. Thompson and M. Patterson), Ch. 9, Academic Press, London and New York.

FREEMAN, R.G. (1971): Effects of ageing on the skin.
Ch. 13 in "The Skin".
ed. E.B. Helwig and F.K. Mostofi, Williams and Wilkins, Baltimore.

FRICKE, H. (1932): The theory of electrolytic polarization.
Phil. Mag. (7th Ser.) 14, 310-318.

FRÖHLICH, H. (1958): "Theory of Dielectrics".
2nd Edn., Clarendon Press, Oxford.

GÄRTNER, G. (1882): Untersuchungen über das elektrische Leitungsvermögen der menschlichen Haut.
Medizin. Jahrbüch ges. Arzte, (Wien), 1882, 519-549.

GARTON, C.G. AND PARKMAN, N. (1976): Experimental and theoretical investigation of conduction in polyethylene from 4 MV/m up to 'intrinsic' breakdown.
Proc. IEE, 123, 271-276.

GATZKE, R.D. (1974): The electrode: a measurement systems viewpoint.
In "Biomedical Electrode Technology: Theory and Practice"
(Eds. H.A. Miller and D.C. Harrison), pp. 99-116, Academic Press, New York.

GEDDES, L.A. (1972): "Electrodes and the Measurement of Bioelectric Events".
Wiley, London.

GEDDES, L.A. AND BAKER, L.E. (1968): "Principles of Applied Biomedical Instrumentation".
Wiley, New York.

GEDDES, L.A. AND STEINBERG, R. (1973): Dry electrodes and holder for electro-oculography.
Med. Biol. Eng. 11, 69-72.

GERISCHER, H. (1970): Semiconductor electrochemistry.
Ch. 5 of "Physical Chemistry: An Advanced Treatise", Vol. IXA: Electrochemistry, ed. H. Eyring.
Academic Press, New York.

GERSTNER, H. (1948): Statische Untersuchungen über den Wechselstrom-widerstand der menschlichen Haut im Tonfrequenzgebiet.
Pflügers Archiv f. d. ges. Physiol. 250, 125-140.

GERSTNER, H. AND GERBSTÄDT, H. (1949): Der Wechselstromwiderstand der menschlichen Haut.
Pflügers Archiv f. d. ges. Physiol. 252, 111-122.

GEVERS, M. (1946): The relation between the power factor and the temperature coefficient of the dielectric constant of solid dielectrics. Philips Res. Rep. 1, 197-224.

GILDEMEISTER, M. AND KAUFHOLD, R. (1920): Ueber das elektrische Leitungsvermögen der überlebenden menschlichen Haut. Pflügers Archiv f. d. ges. Physiol. 179, 154-158.

GILDEMEISTER, M. (1928): Ueber elektrischen Widerstand, Kapazität und Polarisation der Haut. II. Mitteilung. Menschliche Haut. Pflügers Archiv f. d. ges. Physiol. 219, 89-110.

GOODMAN, A.B. AND WOLF, A.V. (1969): Insensible water loss from human skin as a function of ambient vapor concentration. J. appl. Physiol. 26, 203-207.

GOUGEROT, L. (1947): Recherches sur l'impédance cutanée en courant alternatif de basse fréquence au cours de différentes dermatoses. Ann. Derm. Syph. 7, 101-111.

GOUGEROT, L. AND MARSTAL, N. (1959): Nouvelle étude des variations avec l'intensité de l'impédance cutanée en courant alternatif de basse fréquence. C.R. Soc. Biol. 153, 990-992.

GRANT, E.H. (1961): Electrical properties of body tissues. pp. 451-453 in "Encyclopaedic Dictionary of Physics", Vol. 1, Pergamon Press, Oxford.

GREATBATCH, W. (1974): Fundamental properties of physiological electrodes. In "I.E.E. Medical Electronics Monographs 7-12", No. 8 (Eds. D.W. Hill and B.W. Watson). Peter Peregrinus Ltd., Sevenage.

GRICE, K.A. (1980): "Transepidermal water loss" and "Transepidermal water loss in pathological skin". In "The Physiology and Pathophysiology of the Skin" (Ed. A. Jarrett), Vol. 6, Chs. 69 and 70. Academic Press, London.

GRINGS, W.W. (1953): Methodological considerations underlying electrodermal measurement. J. Psychol. 35, 271-282.

GRINGS, W.W. (1974): Recording of electrodermal phenomena. In "Bio-electric Recording Techniques". (Eds. R.F. Thompson and M. Patterson), Ch. 10. Academic Press, New York.

GRODINS, F.S. (1963): "Control Theory and Biological Systems". Columbia University Press, New York.

GROSS, B. (1953): "Mathematical Structure of the Theories of Viscoelasticity". Hermann et Cie, Paris.

HASHIMOTO, K. (1971): Intercellular spaces of the human epidermis as demonstrated with lanthanum. J. invest. Dermatol. 57, 17-31.

HASHIMOTO, K. (1978): The eccrine gland.
In "The Physiology and Pathophysiology of the Skin", Ed. A. Jarrett, Vol. 5, Ch. 46.
Academic Press, London.

HASTED, J.B. (1973): "Aqueous Dielectrics".
Chapman and Hall, London.

HILL, D.W. (1973): "Electronic Techniques in Anaesthesia and Surgery", 2nd Edn.
Butterworths, London.

HILL, L. AND TAYLOR, H.J. (1973): Action of the galvanic current on the skin.
J. Physiol. 90, 93P-94P.

HOBBIE, R.K. (1978): "Intermediate Physics for Medicine and Biology".
John Wiley & Sons, New York.

HOLBROOK, K.A. AND ODLAND, G.F. (1974): Regional differences in the thickness (cell layers) of the human stratum corneum: an ultrastructural analysis.
J. invest. Dermatol. 62, 415-422.

HOPKINSON, J. AND WILSON, E. (1897): On the capacity and residual charge of dielectrics as affected by temperature and time.
Phil. Trans. R. Soc. Lond., Ser. A, 189, 109-135.

HOZAWA, S. (1928): Studien über die Polarisation der Haut. I. Die "Anfangszacke" des elektrischen Stromes durch den Menschenkörper, betrachtet als Ladungserscheinung der Polarisationskapazität der Haut.
Pflügers Archiv f. d. ges. Physiol. 219, 111-140.

HYDE, P.J. (1970): Wide-frequency-range dielectric spectrometer.
Proc. IEE, 117, 1891-1901.

IDSON, B. (1973): Water and the skin.
J. Soc. Cosmet. Chem. 24, 197-212.

IPSER, J. (1969): Periodické změny kožního elektrickéno odporu.
Fsiat. Reumatol. Věstn. 47, 1-8.

JACKSON, R.J., RIDGE, B.D. AND FORWARD, G.C. (1980): The measurement of the moisture content of the skin by a novel impedance technique.
pp. 667-676 of Preprints, Vol. 2, of the 11th International I.F.S.C.C. Congress on "Cosmetics: Research and Technology", Venice, 23rd-26th September 1980.

JARRETT, A. (1973): "The Physiology and Pathophysiology of the Skin".
Vol. 1: The Epidermis.
Academic Press, London.

JARRETT, A. (1973-1980): (Author and Editor) "The Physiology and Pathophysiology of the Skin".
Vol. 1 (1973) The Epidermis
Vol. 2 (1973) The Nerves and Blood Vessels
Vol. 3 (1974) The Dermis and the Dendrocytes

Vol. 4 (1977) The Hair Follicle
Vol. 5 (1978) The Sweat Glands, Skin Permeation, Lymphatics, The Nails
Vol. 6 (1980) The Mucus Membranes
The Action of Vitamin A on the Skin and Mucus Membranes
Transepidermal Water Loss.

JARRETT, A. (1980): The permeability barrier.
In "The Physiology and Pathophysiology of the Skin" (Ed. A. Jarrett), Vol. 6, pp. 2111-2114.
Academic Press, London.

JEANS, SIR JAMES, (1925): "Mathematical Theory of Electricity and Magnetism".
5th Edn., Cambridge University Press.

JONSCHER, A.K. (1975): The interpretation of non-ideal dielectric admittance and impedance diagrams.
Physica Status Solidi (a), 32, 665-676.

JONSCHER, A.K. (1977): The 'universal' dielectric response.
Nature, 267, 673-679.

JONSCHER, A.K. (1978): Analysis of the alternating current properties of ionic conductors.
J. Materials Sci. 13, 553-562.

JONSCHER, A.K. (1981): The universal dielectric response. A review of data and their new interpretation.
In "Physics of Thin Films", Vol. 11, ed. M.H. Francombe
(Expected publication date: January 1981).
Academic Press, New York.

JOSEPH, N.R. AND ENGEL, M.B. (1959): Titration curves of colloidal surfaces. I. Human epidermis.
Archs. Biochem. Biophys. 85, 209-224.

KAUZMANN, W. (1942): Dielectric relaxation as a chemical rate process.
Rev. Mod. Phys. 14, 12-44.

KELLER, P. (1963): Electrophysiologie der Haut.
In "Handbuch der Haut- und Geschlechtskrankheiten",
(J. Jadassohn's Ergänzungswerk).
Springer-Verlag, Berlin.

KELLER, P. AND REIN, H. (1928): Polarisationsmessungen an der Haut nach Röntgen- und Ultravioletttlichtbestrahlungen.
Arch. f. Dermat. 155, 67-70.

KENT, M. (1980): Time domain technique for low frequency dielectric measurements.
J. Phys. E: Sci. Instrum. 13, 457-460.

KHALLAFALLA, A.S., TURNER, L. AND SPYKER, D. (1971): An electrical model to simulate skin dielectric dispersion.
Computers Biomed. Res. 4, 359-373.

KING, G. (1947): Electric polarisation in keratin-water and keratin-methyl alcohol systems.
Trans. Faraday Soc. 43, 601-611.

KING, G. AND MEDLEY, J.A. (1949a): D.C. Conduction in swollen polar polymers. I. Electrolysis of the keratin-water system. J. Colloid Sci. 4, 1-7.

KING, G. AND MEDLEY, J.A. (1949b): D.C. Conduction in swollen polar polymers. II. The influence of temperature and adsorbed salts on the D.C. conductivity of polar polymer adsorbate systems. J. Colloid Sci. 4, 9-18.

KINNEN, E. (1965): Electrical impedance of human skin. Med. Electron. Biol. Eng. 3, 67-70.

KINNEN, E. (1966): Reply to letter to the Editor. Med. & Biol. Eng. 4, 608-609.

KITTEL, J.C. (1976): "Introduction to Solid State Physics". 5th Edn., John Wiley, New York.

KLEITZ, M., FABRY, P. AND SCHOULER, E. (1976): Descriptions of junctions between electronic and solid ionic conductors. in "Electrode Processes in Solid State Ionics", pp. 1-17, eds. M. Kleitz and J. Dupuy. D. Reidel Publishing Company, Dordrecht, Holland.

KLIGMAN, A.M. AND CHRISTOPHERS, E. (1963): Preparation of isolated sheets of human stratum corneum. Arch. Dermatol. 88, 702-705.

KLIGMAN, A.M. (1964): The biology of the stratum corneum. Ch. 20 in: "The Epidermis", ed. W. Montagna and W.C. Lobitz. Academic Press, New York, 1964.

KRYSPIN, J. (1965): The phoreographical determination of the electrical properties of human skin. J. invest. Dermatol. 44, 227-229.

LAKSHMINARAYANAIAH, N. (1980): Membrane phenomena. Ch. 2 in "Electrochemistry", Vol. 7, ed. H.R. Thirsk, Specialist Periodical Reports, the Chemical Society, London.

LAMPERT, M.A. AND MARK, P. (1970): "Current Injection in Solids". Academic Press, New York.

LANDAUER, R. (1978): Electrical conductivity in inhomogeneous media. pp. 2-45 in "Electrical Transport and Optical Properties of Inhomogeneous Media", Ed. J.C. Garland and D.B. Tarner, A.I.P. Conference Proceedings no. 40. American Institute of Physics, New York, 1978.

LAPICQUE, L. (1907): Recherches quantitatives sur l'excitation électrique des nerfs traitée comme une polarisation. J. de Physiol. et de Path. gen. 9, 620-635.

LAWLER, J.C., DAVIS, M.J. AND GRIFFITH, E.C. (1960): Electrical characteristics of the skin. J. invest. Dermatol. 34, 301-308.

LEDUC, M. AND TUREK, B.A. (1978): Dermatologie expérimentale: nouveaux aspects sur le gradient hydrique cutané et les phénomènes d'échange au voisinage de la couche cornée. Proceedings of the VIes Journées Européenes de Cosmétologie, Nantes, pp. 143-150.

LEWIS, T. AND ZOTTERMAN, Y. (1926-27): Vascular reactions of the skin to injury. VIII. The resistance of the skin to constant currents, in relation to injury and vascular responses. J. Physiol. 62, 280-288.

LEWIS, T.J. (1977): The dielectric behaviour of non-crystalline solids. In "Dielectric and Related Molecular Processes", Vol. 3, Ch. 7. Specialist Periodical Reports, The Chemical Society, London.

LONG, A.R. AND BALKAN, N. (1980): A.C. loss in amorphous germanium. Phil. Mag. B41, 287-305.

LUCAS, K. (1910): An analysis of changes and differences in the excitatory process of nerves and muscles based on the physical theory of excitation. J. Physiol. 40, 225-249.

LUDT, H. AND HERRMANN, H.D. (1973): In vitro measurement of tissue impedance over a wide frequency range. Biophysik 10, 337-345.

LYKKEN, D.T. (1971): Square-wave analysis of skin impedance. Psychophysiol. 7, 262-275.

MACDONALD, J.R. (1963): Transient and temperature response of a distributed, thermally activated system. J. Appl. Phys. 34, 538-552.

MACDONALD, J.R. (1974): Simplified impedance/frequency-response results for intrinsically conducting solids and liquids. J. Chem. Phys. 61, 3977-3996.

MACDONALD, J.R. (1976): Space charge polarization. pp. 149-183 in "Electrode Processes in Solid State Ionics", ed. M. Kleitz and M. Dupuy. D. Reidel Publishing Co., Dordrecht.

MACDONALD, J.R. AND BRACHMAN, M.K. (1956): Linear-system integral transform relations. Rev. Mod. Phys. 28, 393-422.

MANY, A., GOLDSTEIN, Y. AND GROVER, N.B. (1965): "Semiconductor Surfaces". North-Holland, Amsterdam.

MARMARELIS, P.Z. AND MARMARELIS, V.Z. (1978): "Analysis of Physiological Systems". Plenum Press, New York.

MATSUMOTO, A. AND HIGASI, K. (1962): Dielectric relaxation of nonrigid molecules at lower temperature. J. Chem. Phys. 36, 1776-1780.

MAULSBY, R.L. AND EDELBERG, R. (1960): The interrelationship between the galvanic skin response, basal resistance, and temperature. J. Comp. Physiol. Psychol. 53, 475-479.

MAURO, A. (1961): Anomalous impedance, a phenomenological property of time-variant resistance. An analytic review. Biophys. J. 1, 353-372.

MAXWELL,R.D.H. AND BARTON, J.L. (1971): The apparent skin resistance. Acta Psychiat. Scand. 47, 92-105.

McCRUM, N.G., READ, B.E. AND WILLIAMS, G. (1967): "Anelastic and Dielectric Effects in Polymeric Solids". John Wiley, London.

MELCZER, N. (1976): Electrometric studies in skin cancer. Ch. 12 in "Cancer of the Skin. Biology-Diagnosis-Management" Vol. 1, Ed. R. Andrade et al. W. B. Saunders Co., Philadelphia.

MELCZER, N. AND KISS, J. (1977): Electrical potentials in epithelial neoplasms. Br. J. Dermatol. 96, 572.

MILLER, A. AND ABRAHAMS, E. (1960): Impurity conduction at low concentrations. Phys. Rev. 120, 745-755.

MITCHELL, D.A. AND VENABLES, P.H. (1980): The relationship of EDA to electrode size. Psychophysiology 17, 408-412.

MONTAGNA, W. (1962): "The Structure and Function of Skin". 2nd edition, Academic Press, New York.

MONTAGNA, W. AND PARAKKAL, P. F. (1974): "The Structure and Function of Skin". 3rd edition, Academic Press, New York.

MOTT, N.F. AND DAVIS, E.A. (1971): "Electronic Processes in Non-Crystalline Materials". Clarendon Press, Oxford.

MUNK, H. (1873): Ueber die galvanische Einführung differenter Flüssigkeiten in den unversehrten lebenden Organismus. Virchows Arch. f. pathol. Anat. u. Physiol. (Leipzig), 1873, 505-516.

NEUMANN, E. AND BLANTON, R. (1970): The early history of electrodermal research. Psychophysiology 6, 453-475.

NGAI, K.L., JONSCHER, A.K. AND WHITE, C.T. (1979): On the origin of the universal dielectric response in condensed matter. Nature, 277, 185-189.

OKAMOTO, Y. AND BRENNER, W. (1964): "Organic Semiconductors". Reinhold Publishing Corporation, New York.

ONSAGER, L. (1934): Deviations from Ohm's Law in weak electrolytes. J. Chem. Phys. 2, 599-615.

PARRISH, J.A. (1975): "Dermatology and Skin Care". McGraw-Hill, New York.

PARISH, W.E. AND RYAN, T.J. (1979): Inflammation.
Ch. 9 in "Textbook of Dermatology", ed. A. Rook, D.S. Wilkinson and F.J.G. Ebling, Vol. 1, 3rd Edn., Blackwell Scientific Publications, Oxford.

PASQUALI, E. (1967): Problems in impedance pneumography: Electrical characteristics of skin and lung tissue.
Med. & Biol. Eng. 5, 249-259.

PETHIG, R. (1979): "Dielectric and Electronic Properties of Biological Materials".
John Wiley & Sons, Chichester.

PFISTER, G. AND SCHER, H. (1977): Time-dependent electrical transport in amorphous solids: $As_2 Se_3$.
Phys. Rev. B15 2062-2083.

PFISTER, R. AND SCHULZ, P. (1966): Ergebnisse und Beobachtungen bei der Messung des elektrischen Hautwiderstandes unter Verwendung von Gleich - und Wechselstrom.
Dermatol. Wochenschr. 27, 692-699.

PHILIPPSON, M. (1921): Les lois de la résistance électrique des tissues vivants.
Bull. Acad. r. Belg. Cl. Sci. 7, 387-403.

PILLA, A.A. (1970): A transient impedance technique for the study of electrode kinetics.
J. Electrochem. Soc. 117, 467-477.

PILLSBURY, D.M. AND HEATON, C.L. (1980): "A Manual of Dermatology".
2nd Edn., W.B. Saunders, Philadelphia.

PIKE, G.E. (1972): A.C. conductivity of scandium oxide and a new hopping model for conductivity.
Phys. Rev. B, 6, 1572-1580.

PLUTCHIK, R. AND HIRSCH, H.R. (1963): Skin impedance and phase angle as a function of frequency and current.
Science, 141, 927-928.

POLLAK, M. (1971): A dielectric theory for amorphous semiconductors.
Proc. R. Soc. Lond. A, 325, 383-400.

POLLAK, M. (1974): Generalization of the random impedance network for hopping conduction.
Proceedings of the 5th International Conference on Amorphous and Liquid Semiconductors, ed. J. Stuke and W. Brenig, pp. 127-134.

POLLAK, M. AND GEBALLE, T.H. (1961): Low-frequency conductivity due to hopping processes in silicon.
Phys. Rev. 122, 1742-1753.

POON, C.S. AND CHOY, T.T.C. (1978): Transient response studies of biological cell impedance.
Med. & Biol. Eng. & Comput. 16, 633-641.

POWELL, M.R. AND ROSENBERG, B. (1970): The nature of the charge carriers in solvated biomacromolecules.
J. Bioenergetics 1, 493-509.

RAISTRICK, I.D., HO, C., AND HUGGINS, R.A. (1976): Ionic conductivity of some lithium silicates and aluminosilicates.
J. Electrochem. Soc. 123, 1469-1476.

RAJKA, G. AND THUNE, P. (1976): The relationship between the course of psoriasis and transepidermal water loss, photoelectric plethysmography and reflex photometry.
Brit. J. Dermatol. 94, 253-261.

RAVAINE, D. AND SOUQUET, J.-L. (1974): Application du tracé des diagrammes d'impédance complexe a l'étude des proprietes électriques et diélectriques des verres alcalins.
J. Chim. Phys. 71, 693-701.

REGELSBERGER, H. (1950): Über elektrographische Organdiagnostik auf Grund der Headschen Zonen.
Verh. Deutsch. Ges. inn. Med. 56, 234-235.

REGELSBERGER, H. (1952): "Der bedingte Reflex und die Vegetative Rhythmik des Menschen, dargestellt am Elektrodermatogramm".
Acta Neuroveg., Suppl. 1,
Springer-Verlag, Vienna.

REICHMANIS, M., MARINO, A.A. AND BECKER, R.O. (1978): Laplace plane analysis of skin impedance: a preliminary investigation.
J. Electrochem. Soc. 125, 1765-1768.

REIN, H. (1924): Experimentelle Studien über Elektroendosmose an überlebender menschlicher Haut.
Zeitsch. f. Biol. 81, 125-140.

REIN, H. (1926a, b, c and d): Die Gleichstrom-Leiter-Eigenschaften und elektromotorischen Kräfte der menschlichen Haut und ihre Auswertung zur Untersuchung von Funktionszuständen des Organes.
(a) I. Die elektromotorischen Kräfte der Haut und deren Ionendurchlässigkeit, pp. 195-216,
(b) II. Ueber die Gleichstrom-Leiter-Eigenschaften der menschlichen Haut und die Polarisation einfacher Membranen, pp. 217-231,
(c) III. Ueber einen speziellen Fall von sensibler Reizung durch Gleichströme, pp. 232-235,
(d) IV. Ueber eine elektromotorische Thermo-Reaktion der menschlichen Haut, pp. 236-247,
of Zeitschrift für Biologie, 85.

REIN, H. (1929): Die Elektrophysiologie der Haut.
In "Handbuch der Haut- und Geschlechtskrankheiten (J. Jadassohn's Ergänzungswerk)", I, 2, 43-91.
Verlag von Julius Springer, Berlin.

REKTORYS, K. (1969): (Editor) "Survey of Applicable Mathematics".
Iliffe Books, London.

RICHTER, G. (1969): Normen und Varienten des scheinbaren Gleichstromwiderstandes der Haut.
Arch. lin. exp. Derm. 233, 407-424.

RICHTER, G. AND HEIDELBACH, U. (1970): Zum Wert der Gleichstromwiderstandsmessung in der Diagnostik allergischer Kontaktekzeme.
Allergie und Asthma 16, 152-156.

RIEGER, M.M. AND DEEM, D.E. (1974): Skin moisturizers. I. Methods for measuring water regain, mechanical properties, and transepidermal moisture loss of stratum corneum.
J. Soc. Cosmet. Chem. 25, 239-252.

ROBINSON, D.A. (1978): "Handbook for the Oxford/Plessey Microsystems Fourier Impedance Analyser".
Plessey Microsystems Ltd., Towcester, Northants.

ROOK, A., WILKINSON, D.S. AND EBLING, F.J.G. (1975): (Editors) "Textbook of Dermatology", 3rd edition (2 volumes).
Blackwell Scientific Publications, Oxford.

ROSE, A. (1955): Space-charge-limited currents in solids.
Phys. Rev. 97, 1538-1544.

ROSENBERG, B. (1962): Electrical conductivity of proteins. II. Semiconduction in crystalline bovine hemoglobin.
J. Chem. Phys. 36, 816-823.

ROSENBERG, B. (1971): Semiconductive and photoconductive properties of bimolecular lipid membranes.
In "Electrical Conduction in Organic Solids",
Discussions of the Faraday Society, no. 51, pp. 190-201.

ROSENDAL, T. (1943): Studies on the conducting properties of the human skin to direct current.
Acta physiol. Scand. 5, 130-151.

ROSENDAL, T. (1944): Further studies on the conducting properties of human skin to direct and alternating current.
Acta physiol. Scand. 8, 183-202.

ROSENDAL, T. (1945): Concluding studies on the conducting properties of human skin to alternating current.
Acta physiol. Scand. 9, 39-49.

ROTHMAN, S. (1954): "Physiology and Biochemistry of the Skin".
University of Chicago Press, Chicago.

ROTHSCHILD, LORD (1946): The theory of alternating current measurements in biology and its application to the investigation of the biophysical properties of the trout egg.
J. exp. Biol. 23, 77-99.

RYAN, T.J. (1973): "The Blood Vessels of the Skin".
Chs. 16-21 in "The Physiology and Pathophysiology of the Skin",
Vol. 2, ed. A. Jarrett. Academic Press, London.

RYAN, T.J. (1978): "The Lymphatics of the Skin",
Chs. 57 and 58 in "The Physiology and Pathophysiology of the Skin",
Vol. 5, ed. A. Jarrett, Academic Press, London.

SALTER, D.C. (1977): Epidermal cell kinetics and the fraction of
tritium-labelled mitoses.
Clin. Exp. Derm. 2, 92-94.

SALTER, D.C. (1978a): The energy basis of dielectric relaxation loss.
Nature, 271, 645-648.

SALTER, D.C. (1978b): A means of rapidly quantifying and comparing skin
without biopsy, and a fundamental way of non-invasively deriving
the charge gradient across it.
Proceedings, September 1978 Conference of the European Society
for Comparative Skin Biology, University College Hospital Medical
School, London, and also presented as a prize paper at the meeting
of the Royal Society of Medicine Section of Measurement in Medicine,
23rd April, 1979.

SALTER, D.C. (1978c): Describing relaxing systems which evolve with time.
pp. 312-322, 1978 Annual Report, U.S. National Research Council
Conference on Electrical Insulation and Dielectric Phenomena,
National Academy of Sciences, Washington D.C.

SALTER, D.C. (1979): Quantifying skin disease and healing *in vivo*
using electrical impedance measurements.
Ch. 2 in "Non-Invasive Physiological Measurements", Vol. 1,
ed. P. Rolfe, Academic Press, London.

SALTER, D.C. (1980): Electrical conduction in human skin *in vivo*.
Invited lecture at the University of Nottingham Department of Chemistry
meeting on "Organic and Biological Semiconductors" to mark the
retirement of Professor D.D. Eley, OBE, FRS, from the Chair of
Physical Chemistry. University of Nottingham, 23rd-25th September, 1980.

SALTER, D.C. (1981): The form of the alternating-current electrical properties
of human skin measured *in vivo*.
In "Bioengineering and the Skin", ed. R. Marks and P.A. Payne,
MTP Press, Lancaster, U.K. (Being the Proceedings of the 2nd
International Conference on Bioengineering and the Skin,
Cardiff, 19th-21st July, 1979).

SCHANNE, O.F. AND RUIZ P.-CERETTI, E. (1978): "Impedance Measurements
in Biological Cells".
John Wiley & Sons, Toronto.

SCHEIDER, W. (1975): Theory of the frequency dispersion of electrode
polarization. Topology of networks with fractional-power
frequency dependence.
J. Phys. Chem. 79, 127-136.

SCHER, H. AND LAX, M. (1973a): Stochastic transport in a disordered solid.
I. Theory.
Phys. Rev. B, 7, 4491-4502.

SCHER, H. AND LAX, M. (1973b): Stochastic transport in a disordered solid.
II. Impurity conduction.
Phys. Rev. B, 7, 4502-4519.

SCHEUPLEIN, R.J. (1965): Mechanism of percutaneous absorption. I. Routes of penetration and the influence of solubility. J. invest. Dermatol. 45, 334-346.

SCHEUPLEIN, R.J. (1967): Mechanism of percutaneous absorption. II. Transient diffusion and the relative importance of various routes of skin penetration. J. invest. Dermatol. 48, 79-88.

SCHEUPLEIN, R.J. (1976a): Percutaneous absorption after twenty-five years: or "Old wine in new wineskins". J. invest. Dermatol. 67, 31-38.

SCHEUPLEIN, R.J. (1976b): Permeability of the skin: a review of major concepts and some new developments. J. invest. Dermatol. 67, 627-676.

SCHEUPLEIN, R.J. (1978): "The skin as a barrier", "Skin permeation" and "Site variations in diffusion and permeability". In "The Phsyiology and Pathophysiology of the Skin" (Ed. A. Jarrett), Vol. 5, Chs. 54, 55 and 56, Academic Press, London.

SCHEUPLEIN, R.J. AND BLANK, I.H. (1971): Permeability of the Skin. Physiol. Rev. 51, 702-747.

SCHEUPLEIN, R.J. AND MORGAN, L.J. (1967): "Bound water" in keratin membranes measured by a microbalance technique. Nature, 214, 456-458.

SCHULZ, I., ULLRICH, K.J., FROMTER, E., HOLZGREVE, H., FRICK, A. AND HEGEL, U. (1965): Mikropunktion und elektrische Potentialmessung an Schweissdrüsen des Menschen. Pflügers Archiv f. d. ges. Physiol. 284, 360-372.

SCHWAN, H.P. (1957): Electrical properties of tissue and cell suspensions. Adv. biol. med. Phys. 5, 147-209.

SCHWAN, H.P. (1963): Determination of biological impedances. In "Physical Techniques in Biological Research" (Ed. W.L. Nastuk), Vol. 6B, Ch. 6, Academic Press, New York.

SCHWAN, H.P. (1965): Biological impedance determinations. J. Cell. Comp. Physiol. 66, Suppl. 2, 5-11.

SCHWAN, H.P. (1968): Electrode polarization impedance and measurements in biological materials. Ann. N.Y. Acad. Sci. 148, 191-208.

SCHWARZ, G. (1962): A theory of the low-frequency dielectric dispersion of colloidal particles in electrolyte solution. J. Phys. Chem. 66, 2636-2642.

von SCHWEIDLER, E. (1907): Studien über die Anomalien im Verhalten der Dielektrika. Ann. d. Phys. 24. 711-770.

SIMONS, P.J., SPIRO, M. AND LEVY, J.F. (1980): Electrical transport of ions through sapwood of Pinus Sylvestris (Scots Pine).
Some work of the Department of Chemistry, Imperial College, London, presented as a poster at a conference on "Electrochemistry in the Control of Biological Growth", Oxford, 1st-2nd July 1980, organized by the Electrochemistry Group of the Royal Society of Chemistry.

SINCLAIR, D.C. (1967): "Cutaneous Sensation".
Oxford University Press, London.

SINCLAIR, D.C. (1973): "The Nerves of the Skin".
Chs. 11-15 in "The Physiology and Pathophysiology of the Skin", Vol. 2, ed. A. Jarrett, Academic Press, London.

SINGH, B., SMITH, C.W. AND HUGHES, R. (1979): In vivo dielectric spectrometer.
Med. & Biol. Eng. & Comput. 17, 45-60.

SKERROW, D. (1978): The proteins of epidermis in relation to normal and abnormal keratinization.
Ch. 7 in "The Ichthyoses", ed. R. Marks and P.J. Dykes, MTP Press, Lancaster, U.K.

SMITH, C.E. (1937): The effect of changes in the temperature and humidity of the air on the apparent skin resistance.
J. Psychol. 3, 325-331.

SMITH, R.A. (1978): "Semiconductors".
2nd Edn., Cambridge University Press, Cambridge.

SOUTHWORTH, R.W. AND DELLEZUW, S.L. (1965): "Digital Computation and Numerical Methods".
McGraw-Hill, New York.

SPEAR, W.E., LE COMBER, P.G., AND SNELL, A.J. (1978): An investigation of the amorphous-silicon barrier and p-n junction.
Phil. Mag. B, 38, 303-317.

SPEARMAN, R.I.C. (1977): The structure and function of the fully-developed follicle.
Ch. 39 in "The Physiology and Pathophysiology of the Skin", Vol. 4, ed. A. Jarrett, Academic Press, London.

SPENCER, T.S., LINAMEN, C.E., AKERS, W.A. AND JONES, H.E. (1975): Temperature dependence of water content of stratum corneum.
Br. J. Dermatol. 93, 159-164.

STEPHENS, W.G.S. (1963): The current-voltage relationship in human skin.
Med. Electron. Biol. Eng. 1, 389-399.

STRALEY, J.P. (1977): Cooperative phenomena in resistor networks and inhomogeneous conductors.
pp. 118-127 in "Electrical Transport and Optical Properties of Inhomogeneous Media", eds. J.C. Garland and D.B. Tanner, A.I.P. Conference Proceedings no. 40, American Institute of Physics, New York.

STROHL, A. AND IODKA, H. (1924): Relation entre les facteurs physiques de la polarisation électrique.
Compte Rendu Soc. Biol. 91, 258-260.

TAGAMI, H., OHI, M., IWATSUKI, K., KANAMARU, Y., YAMADA, M. AND ICHIJO, B. (1980) Evaluation of the skin surface hydration *in vivo* by electrical measurement.
J. invest. Dermatol. 75, 500-507.

TAKASHIMA, S. (1967): Mechanism of dielectric relaxation of deoxyribonucleic acid.
Ch. 17 of "Ordered Fluids and Liquid Crystals", Advances in Chemistry Series Vol. 63, American Chemical Society.

TAKASHIMA, S. AND SCHWAN, H.P. (1974): Passive electrical properties of squid axon membrane.
J. Membrane Biol. 17, 51-68.

TAUC, J. (1970): Optical properties of non-crystalline solids.
pp. 278-313 in "Optical Properties of Solids", ed. F. Abelès, North-Holland, Amsterdam.

TAYLOR, H.E. (1957): An investigation of the dielectric relaxation exhibited by glass.
Part I: Theory and methods of measurement, J. Soc. Glass Technol. 41, 350-382.

TAYLOR, R.E. (1977): Electrical impedance of excitable membranes.
Ann. N.Y. Acad. Sci. 303, 298-305.

TAYLOR, R. (1978): Amorphous materials catch up with crystals.
New Scientist, 30th of November, 672-674.

TEORELL, T. (1953): Transport processes and electrical phenomena in ionic membranes.
Prog. Biophys. & Biophys. Chem. 3, 305-369.

THIELE, F.A.J. AND MALTEN, K.E. (1973). Evaluation of skin damage.
Br. J. Dermatol, 89, 373-382, 565-569.

TREGEAR, R.T. (1965). Interpretation of skin impedance measurements.
Nature 205, 600-601.

TREGEAR, R.T. (1966a). "Physical Functions of Skin".
Academic Press, London.

TREGEAR, R.T. (1966b): The permeability of mammalian skin to ions.
J. invest. Dermatol. 46, 16-23.

VAUGHAN, W.E., LOVELL, W.S. AND SMYTH, C.P. (1962): Microwave absorption and molecular structure in liquids. XLV. The dispersion of alkyl halides at millimetre wavelengths.
J. Chem. Phys. 36, 753-758.

VENABLES, P.H. AND MARTIN, I. (1967): Skin resistance and skin potential.
Ch. 2 in "A Manual of Psycho-physiological Methods", ed. P.H. Venables and I. Martin, North-Holland Publishing Co., Amsterdam.

VIGOUROUX, R. (1888): De la resistance électrique comme signe clinique.
Progres Medicale, 3, 87-89.

VRANSKY, V.K. AND EMANUILOV, I. (1966): On the determination of the electrical impedance of human skin.
Med. & Biol. Eng. 4, 605-608.

WEINBERG, A.M. AND HOUSEHOLDER, A.S. (1941): Statistical distribution of impedance elements in biological systems.
Bull. Math. Biophys. 3, 129-135.

WENGER, M.A. (1962): Some problems in psychophysiological research.
Ch. 5 in "Physiological Correlates of Psychological Disorder", Ed. R. Roessler and N.S. Greenfield, University of Wisconsin Press, Wisconsin.

WILLIAMS, G.J. AND BRADLEY, J. (1968): Steady-state membrane hyperpolarization by large applied currents in Nitella Translucens.
Biophys. J. 8, 145-147.

WOODROUGH, R.E. (1976): "An investigation into the measurement, interpretation and clinical application of slowly-varying electrical potential difference on the surface of the human body",
Ph.D. thesis, University of London.

WOODROUGH, R.E. (1977): Reply to Melczer and Kiss (1977).
Br. J. Dermatol. 96, 573-574.

WOODROUGH, R.E. AND WATSON, B.W. (1975): The effect of the electrolyte applied to the surface of the skin on the measured electrical potential difference in vivo; an explanation of the apparently contradictory results in the literature.
Phys. Med. Biol. 20, 1021-1024.

WOOLLEY-HART, A. (1972): Some physical and physiological aspects of the passage of an electric current through the skin.
Br. J. Clin. Hypn. 3, 129-152.

WRIGHT, H.C. (1979): "Elementary Semiconductor Physics".
Van Nostrand Reinhold, London.

WRIGHT, N.A. (1976): A new look at epidermal cell kinetics in psoriasis and other dermatoses.
Clin. Exp. Derm. 1, 275-278.

WRIGHT, N.A. AND SALTER, D.C. (1974): Human epidermal stimulants, normal and psoriatic.
Clin. Exp. Derm. 4, 545-546.

WYLIE, C.R. (1975): "Advanced Engineering Mathematics".
4th Edn., McGraw-Hill, New York.

YAGER, W.A. (1936): The distribution of relaxation times in typical dielectrics.
Physics, I, 434-450.

YAMAMOTO, T. AND YAMAMOTO, Y. (1976a): Electrical properties of the epidermal stratum corneum.
Med. Biol. Eng. 14, 151-158.

YAMAMOTO, T. AND YAMAMOTO, Y. (1976b): Dielectric constant and resistivity of epidermal stratum corneum.
Med. Biol. Eng. 14, 494-500.

YAMAMOTO, T. AND YAMAMOTO, Y. (1977): Analysis for the change of skin impedance.
Med. & Biol. Eng. & Comput., 15, 219-227.

Volume 9, No. 1

ORIGINAL ARTICLES

SOME ASPECTS OF THE PROGNOSTIC DETECTION OF REFERRED CLINICAL SIGNS

by

D. C. SALTER, M.Sc.

Introduction

Physicians have always wanted to make atraumatic investigations of the physiological state of the internal organs of their patients. To some extent this is possible via viscero-somatic and viscero-cutaneous reflex phenomena (Sinclair, 1973; Schliack, 1964). Nevertheless, the limited specificity of these reflexes (Cope, 1972) has restricted their clinical application.

Although modern medicine cannot improve this specificity, it can improve the method of detecting the clinical signs. This paper reports some work in this direction carried out in London, at St. Bartholomew's Hospital and the National Hospital for Nervous Diseases, and continuing at The Slade Hospital, Oxford.

(1) The Reference of Clinical Signs:

(a) *Clinical findings*

Pathological changes in one part of the body often produce changes elsewhere that may be detected more easily. These reflex phenomena can be used for diagnostic purposes (Schliack, 1964). For example, when internal organs become diseased, changes become apparent in certain areas of skin embryologically related to the viscus concerned, and known as Head's zones since Sir Henry Head first reported clinical investigations of their significance (Head, 1893, 1894, 1896). Referred disturbances may be sensory, motor or both; not only may hyperalgesia be found but also skeletomotor, vasomotor and sudomotor changes. To describe the results of but one worker, Korr (1949a,1949b) used simple equipment to investigate two classes of patient with visceral disease, finding zones of raised electrical conductivity in skin segmentally related to the viscus involved. The zones were fairly consistent for a particular disease and were related to the pattern of referred pain. For example, post myocardial infarction cases had such zones over two or more of the upper four thoracic vertebrae, near the sternum at the corresponding rib levels and over the medial edges of one or both scapulae in the corresponding dermatomes. One subject, repeatedly examined over a period of months, first presented such zones three weeks prior to a coronary occlusion. This investigative technique might thus have given a very valuable warning. Patients with duodenal cap ulcer had zones of m rkedly raised conductivity over the spinal muscles on the right side, pposite T5-T8, over corresponding ribs on the anterior chest wall and to the right of the