Chapter 4

Recreating the ILC Interaction Region at End Station A

To test the robustness of striplines in ILC backgrounds, the information about the interaction region of the ILC (chapter 3) was used to build an IR mock-up.

What hits the striplines depends on the upstream material; the radiation lengths and apertures determine the energies and angles of the particles that reach the striplines. To aid in creating the distribution of particles and energies, it was decided to build a "module" replicating the important features of the ILC IR. This was installed at End Station A (ESA) at SLAC.

4.1 End Station A

The beam parameters at ESA, shown in table 4.1, match with those proposed for the ILC in terms of charge and are close in bunch length and energy spread. ESA operates with single bunches with a repetition rate of 10 Hz as opposed to the ILC which would operate with between 1000 and 5400 bunches in a pulse with a pulse repetition rate of 5 Hz [11]. However, the background studies do not require multi-bunch operation as the bunches are spaced at least 180 ns apart and the backgrounds only last for a few tens of nanoseconds. The programme at ESA ran with beam energy 28.5 GeV, although the linear accelerator at SLAC can deliver up to 50 GeV, which is almost ten times smaller than the energy of the ILC beam. However, the relatively low energy of the beam does not affect the operation of a stripline BPM (as long as the beam is relativistic, see section 1.5) and since the background particles are predominantly a few GeV in energy (figure 3.28), an ILC energy beam is not required to create them.

1.25 m of beamline was made available for the FONT module that recreated the ILC IR. There were also beam diagnostics available such as toroids, wire scanners and beam profile monitors and facilities to insert targets in the beamline. This meant ESA was ideal for this purpose as it allowed the development of unique and flexible strategies to create backgrounds (as described in chapters 5,6 and 7).

Parameter	SLAC ESA	ILC
Repetition Rate	10 Hz	5 Hz
Beam Energy	28.5 GeV	250 GeV
Bunch Charge	1 - 2 $\times 10^{10}$	$(1-2) \times 10^{10}$
Bunch Length	300 - 500 μm	300 μm
Energy Spread	0.2%	0.1%

Table 4.1: SLAC ESA beam parameters compared with those for the 500 GeV ILC [91].

4.2 The FONT Module

The module (figure 4.1) was based on the SiD design for the IR. The latest design at the time (February 2006) was used which was for the 20 mrad crossing.

The module was installed at ESA in July 2006 (figure 4.2) downstream from a wire scanner (3WS1), drift space and a profile monitor (3PR3) and upstream from a collimator (3C2).

4.2.1 The Low-Z Mask

At the ILC, the low-Z mask material will be made from either carbon or beryllium. For the FONT module, carbon was chosen as it is readily available and easier to work with than beryllium. Since the carbon had to be in a vacuum at 2×10^{-5} torr it had to be hard and non-porous[1]. It was decided to use a high-density, high-purity graphite [93].

4.2.2 The BeamCal

In the SiD design, the BeamCal is a calorimeter with 50 layers of high-Z material (tungsten), silicon, G10 and air. To match the radiation length and dimensions of the BeamCal in the module, it was assumed to be made of one high-Z material: lead, which was easy to purchase and machine. The length of lead decided upon was a close match to the radiation length of the proposed BeamCal (see table 4.2). To make it easier to move and stack around the beamline, the lead was designed as bricks with a hole machined for the beampipe to go through. The bricks were split in a staggered fashion as in figure 4.3. The beampipe was made from stainless steel and not beryllium as the choice of beampipe material is still an option between the two pending further work [77], and stainless steel represents a worse background case due to its higher density. The dimensions of the beampipe matched those most likely for the ILC.

[1]Graphite is usually pressed from powder and absorbs gases and water which would ruin a vacuum if it is used in one.

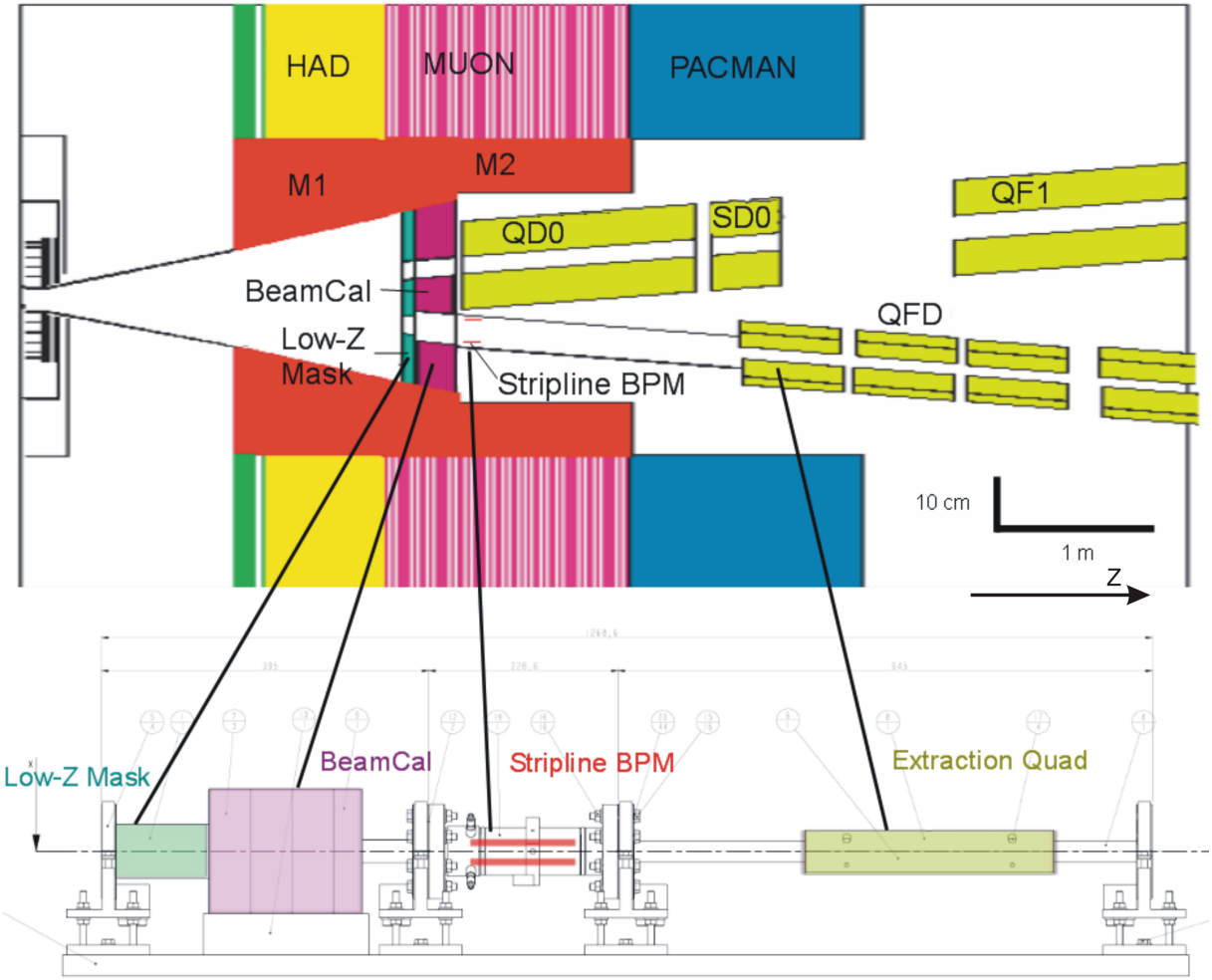

Figure 4.1: Top: Plan view of the SiD 20 mrad IR (see also figure 3.9). Below: An engineering drawing of the FONT BPM Module (side view) [92]. The beamline elements that have been mocked in the module are indicated.

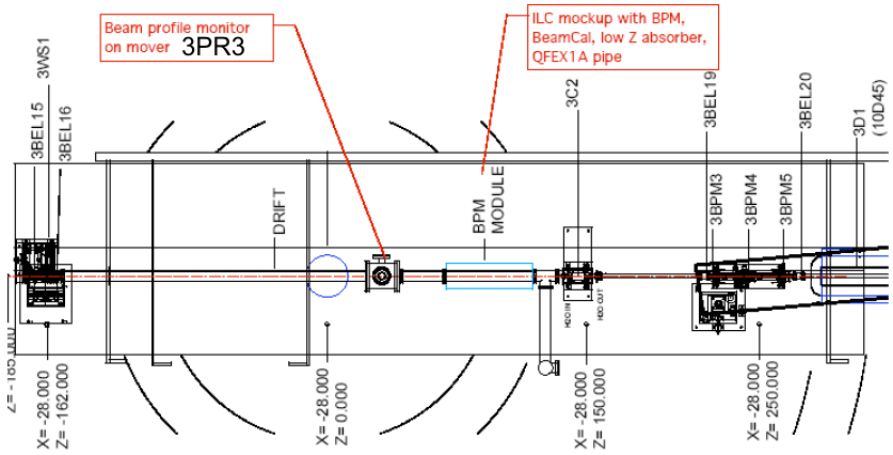

Figure 4.2: The FONT module location in ESA showing an upstream wire scanner for measuring the size of the beam in x and y (3WS1), a beam profile monitor comprising a scintillator on a mover that can be remotely inserted into the beam (3PR3) and the nearest beamline element to the module (3C2).

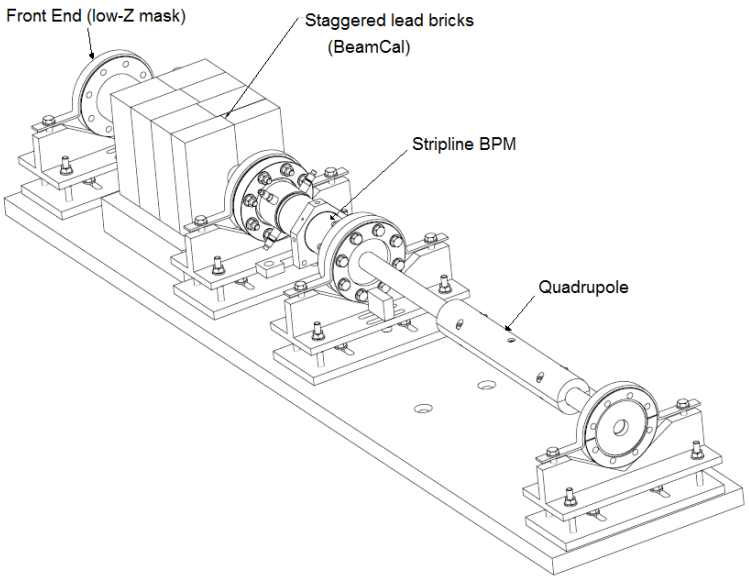

Figure 4.3: Engineering drawing showing the low-Z mask at the back, the staggered lead bricks of the "BeamCal", the stripline BPM and steel sleeve "quadrupole"[92].

Material	Radiation Length (cm)	Thickness (cm)	Thickness (Rad lengths)
Tungsten	0.35	0.25	0.7143
Silicon	9.36	0.032	0.0034
G10	19.40	0.068	0.0035
Air	30420	0.375	0.0000
	× 50 layers Total:	18.75	36.06
Lead	0.56	19.00	33.93

Table 4.2: The materials of the BeamCal are shown with the radiation length of the material and its thickness in each of the fifty layers of the BeamCal measured in centimetres and number of radiation lengths. The amount of lead in the FONT module representing the BeamCal is also shown in terms of its length in centimetres and radiation lengths in the final line of the table.

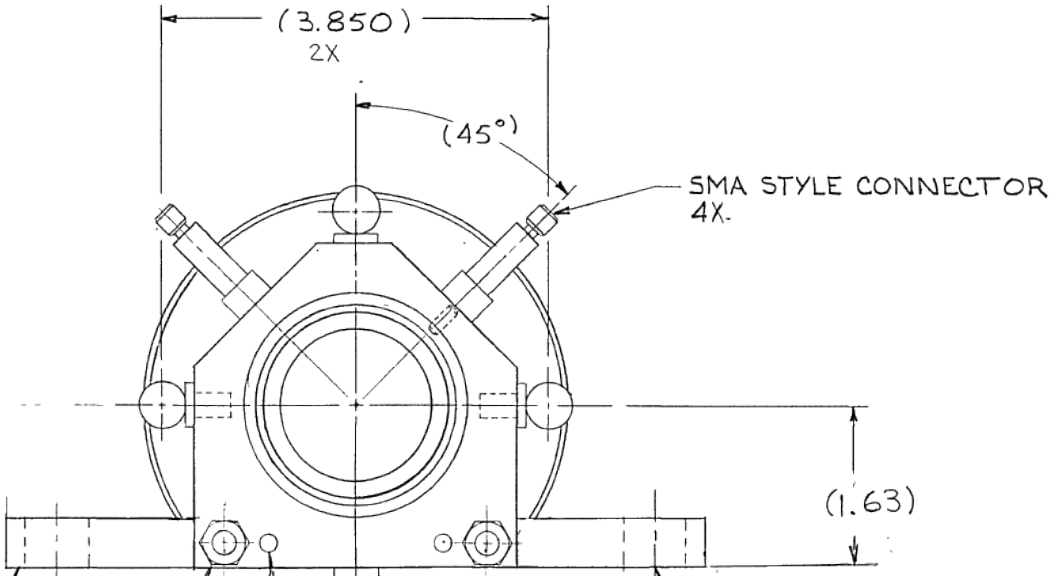

Figure 4.4: The BPM pick-offs (labeled "SMA style connector") and the striplines themselves are at 45° to the vertical in the BPM used in the module [94].

4.2.3 The Stripline BPM

A SLAC stripline BPM was used for the feedback BPM. It was similar to those used at the final focus of the SLAC Linear Collider and the type of BPM that may be used in the ILC. The striplines were 15 cm long at a radius of 2 cm from the centre of the BPM and 4 mm from the wall of the BPM. Unlike at the ILC, the striplines were positioned at 45° to the x and y axes (figure 4.4). The striplines were shorted on the downstream end with the pick-offs upstream. This is the most probable choice between the three options (see section 1.5.2) for the stripline at the ILC. If there does turn out to be noise, it avoids the potential noise getting doubled on its reflection, as it would in an open-ended BPM, and it avoids the potential noise being DC and saturating components in the feedback electronics, as it could in a terminated BPM.

4.2.4 The Quadrupole

The last item was the extraction line quadrupole. Since the position for this item was unfixed in the IR proposal at the time, the fake quadrupole was designed to be a sleeve of steel around the beampipe whose z position could be varied. The inner and outer radius of the steel sleeve were chosen based on drawings of the proposed superconducting quadrupoles as shown in figure 4.5 [95]. The aim was to retain the number of radiation lengths (see table 4.3) and also to keep the physical dimensions as similar as possible. The heavy material (stainless steel and the superconductive coil of 60% copper, 20% niobium and 20% titanium [76]) of the quadrupole extends to a radius of 2.4 cm and then it is mainly liquid helium with the cryostat wall at a radius of 3.6 cm. The FONT module quadrupole has an outer radius of 2.5 cm so as to be close to the dimensions of the heavy material (see table 4.3).

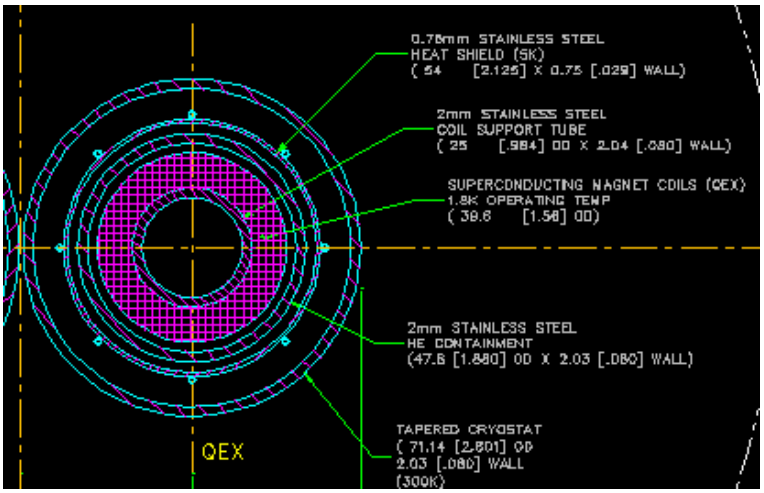

Figure 4.5: The end cross section view of the extraction line quadrupole. The design mainly consists of stainless steel (support tubes and helium containment), niobium-titanium embedded in copper (the superconducting magnetic coils) and liquid helium. [95]

Material	Radiation Length (cm)	Thickness (cm)	Thickness (Rad lengths)
Stainless Steel (SS)	1.76	0.685	0.389
Superconductor	1.58	0.730	0.463
Liquid He	756.00	1.096	0.001
	Total:	2.511	0.854
SS Beampipe	1.76	0.204	0.116
SS Sleeve	1.76	1.300	0.739
	Total:	1.504	0.855

Table 4.3: The extraction line quadrupole was recreated in stainless steel with a thickness in radiation lengths close to that of the proposed quadrupole. The overall thickness was not matched. Instead the dimensions were chosen to match the high-Z core of the quadrupole.

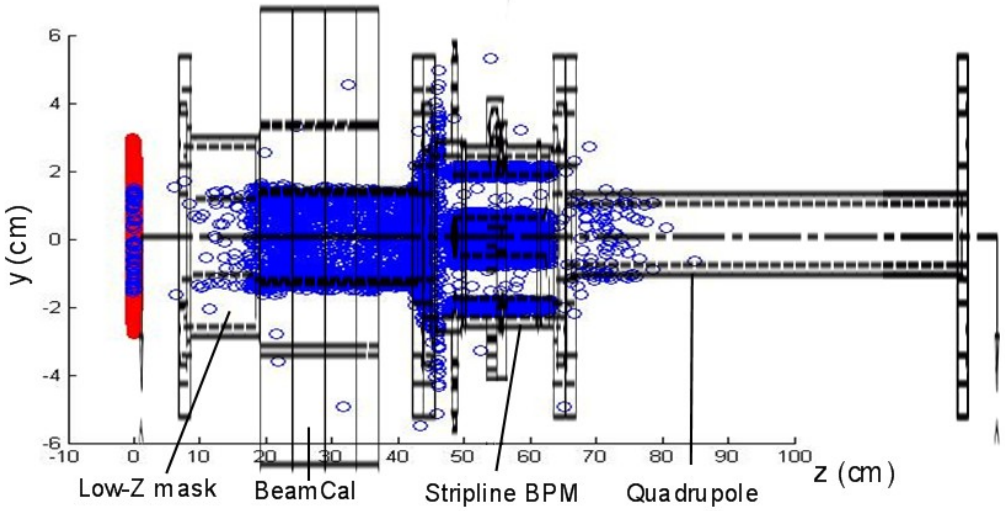

Figure 4.6: Side view of the FONT module. Blue circles represent the sources for particles that hit the striplines in a GEANT3 simulation. The input beam is shown in red.

4.2.5 Module simulations

A GEANT3 model of the module was set up. Input bunches of electrons were produced using a random number generator in Matlab in a uniform distribution out to a radius of 3 cm. They were directed along the z axis of the module. The hits on the striplines in the module's BPM were recorded in the simulation. The hits were also tracked back to their sources, i.e. where the interactions and showers took place.

In designing the module, attention was given to matching lengths and inner radii but not the outer radii (with the exception of the quadrupole) as it was assumed that mainly the inner surface of the IR elements would be involved in generating secondaries. This GEANT3 simulation was used to check this assumption before constructing the module. The hit sources were found to be in locations shown in figure 4.6. The blue circles are the source locations and are mainly gathered at the inner surface of the BeamCal and low-Z mask confirming the assumption.

This simulation also indicated that the upstream flange of the BPM is a source for many of the hits (figure 4.7). The flanges on the borrowed BPM were large and so represent a conservative case where there is no attempt to minimise the effects of backgrounds on a stripline through optimised design aimed at minimising material.

Also apparent from figure 4.7 is that the presence of an ESA collimator (3C2 as shown in figure 4.2) 230 cm downstream of the module is not a source for any hits on the striplines.

The position of the extraction line quadrupole was not precisely known at the time of designing the module so the z location of the quadrupole was adjustable. This simulation was performed with the quadrupole immediately against the stripline BPM and, as figure 4.7 shows, very few particles traveled back from it. This indicated that the contribution of the quadrupole was minimal. In addition, the fact that the length of the quadrupole mock-up did not match that of the quadrupole at the ILC was not an issue, as showers that went on

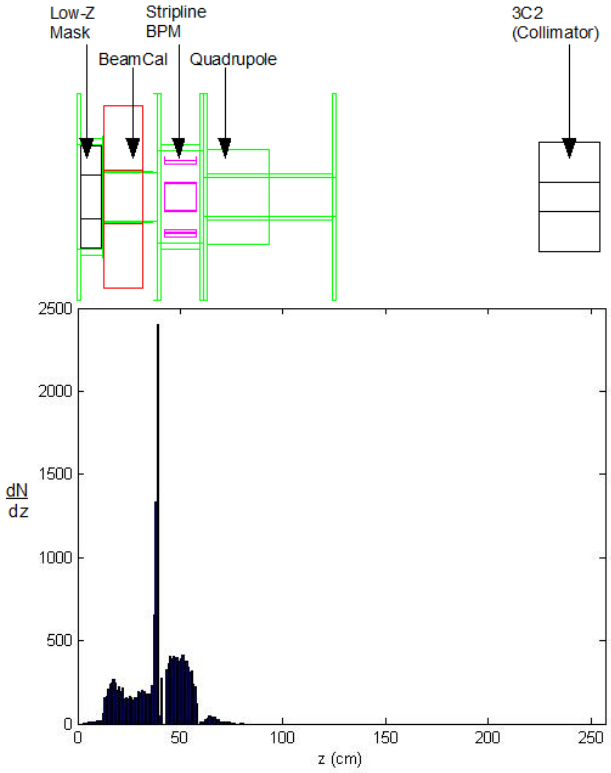

Figure 4.7: Histogram of the z location of the source of the particles that hit the striplines. A representation of the FONT module plus the downstream 3C2 collimator is shown with the same scale in z as the histogram.

the hit the striplines only occurred in the first 10 cm of its length.

It was undecided whether to make the low-Z mask from beryllium or carbon in the ILC IR. The module low-Z was made from carbon and simulation results (not shown) indicate that this produces more hits on the striplines than beryllium due to its higher Z.

4.3 Summary

The experimental investigation of the robustness of a stripline BPM to ILC IR backgrounds was carried out at End Station A (ESA) at SLAC. ESA offered similar beam charge, bunch length and energy spread to ILC and also the ability to change these parameters, if necessary, for the experiment. There were many diagnostic instruments and the beamline and operations were flexible enough for additional beamline elements and instruments to be inserted. This control and flexibility was vital for the creation of backgrounds as described in the next three chapters.

A module was built to simulate the material and inner radii of the ILC IR based on the SiD 20 mrad design. In the design, attention was paid to matching the radiation lengths and the dimensions of the low-Z mask, BeamCal and extraction line quadrupole of the ILC IR. This was used to produce secondaries through the conjunction of the module with input beams (the generation of which are described in the following three chapters) with energies and spatial distribution that matched those of the ILC at the BPM location. When there was a choice in the design, such as with the low-Z mask material and beampipe material, the decision was always with the option that gave the highest backgrounds. Simulations were used to confirm that outer-radii did not have to be matched, only the inner radii, and that the presence of a downstream collimator in ESA did not affect the backgrounds at the BPM.